DocuCentre-V C2265
DocuCentre-V C2263

Administrator Guide

Microsoft, Windows, Windows NT, Windows Server, Windows Vista, and Internet Explorer are either registered trademarks or trademarks of Microsoft Corporation in the United States and/or other countries.

Adobe, Acrobat, Reader, PostScript, and PostScript 3 are trademarks of Adobe Systems Incorporated.

Macintosh and Mac OS are trademarks of Apple Inc.

PCL, HP-GL, and HP-GL/2 are registered trademarks of Hewlett-Packard Corporation.

ThinPrint is a registered trademark of ThinPrint GmbH in Germany and other countries.

Unicode is a registered trademark of Unicode, Inc.

Mopria is a trademark of the Mopria Alliance.

Google Cloud Print and Gmail are registered trademarks or trademarks of Google Inc.

All product/brand names are trademarks or registered trademarks of the respective holders.

Microsoft product screen shot(s) reprinted with permission from Microsoft Corporation.

For information on license, refer to About License in the User Guide.

In this manual, safety instructions are preceded by the symbol ⚠.
Always read and follow the instructions before performing the required procedures.

As the copying machine contains a feature designed to prevent forging of certain documents, there may be rare instances where copies or scanned images do not achieve the desired results.

The data saved in the hard disk of the machine may be lost if there is any problem in the hard disk. Fuji Xerox is not responsible for any direct and indirect damages arising from or caused by such data loss.

Fuji Xerox is not responsible for any breakdown of machines due to infection of computer virus or computer hacking.

Important

1. This manual is copyrighted with all rights reserved. Under the copyright laws, this manual may not be copied or modified in whole or part, without the written consent of the publisher.
2. Parts of this manual are subject to change without prior notice.
3. We welcome any comments on ambiguities, errors, omissions, or missing pages.
4. Never attempt any procedure on the machine that is not specifically described in this manual. Unauthorized operation can cause faults or accidents. Fuji Xerox is not liable for any problems resulting from unauthorized operation of the equipment.

   An export of this product is strictly controlled in accordance with Laws concerning Foreign Exchange and Foreign Trade of Japan and/or the export control regulations of the United States.

Xerox, Xerox and Design, as well as Fuji Xerox and Design are registered trademarks or trademarks of Xerox Corporation in Japan and/or other countries.

PDF Bridge, ContentsBridge, ApeosWare, DocuShare, SmartWelcomEyes, and DocuWorks are registered trademarks or trademarks of Fuji Xerox Co., Ltd.

CentreWare is a registered trademark or trademark of Xerox Corporation in Japan and/or other countries.

Table of Contents

1 Before Using the Machine 15

Preface 16

Types of Manuals 17

Using This Guide 18

Organization of This Guide 18

Conventions 19

Interface Cables 21

Using the USB Interface 21

Using the Ethernet Interface 21

Power Saver Mode 23

Changing the Interval for Entering Power Saver Mode 23

Warmer Mode 26

Setting the Warmer Mode 26

Customizing the Control Panel 29

Changing the Screen Default 29

Setting the Screen After Auto Clear 31

Customizing the Button Layout 33

Assigning Services to the Custom Buttons 39

Adjusting Screen Brightness 41

Touch Screen 42

Important Security Instructions 44

Entering Text 45

2 Paper and Other Media 47

Paper Types 48

Loadable Quantity and Weight for Supported Paper 48

Supported Paper Type 49

Loading Paper 66

Loading Paper in Trays 1 to 4 67

Loading Paper in Tray 5 (Bypass) 68

Changing the Paper Size 70

Changing the Paper Size for Trays 1 to 4 70

Changing the Paper Settings 72

3 Maintenance 77

Replacing Consumables 78

Replacing Toner Cartridge 80

Replacing Waste Toner Container (R5) 82

Replacing Drum Cartridges R1, R2, R3, or R4 87

Replacing Staple Cartridge (for Finisher-A1) 88

Replacing Staple Cartridge (for Finisher-B1) 90
Replacing Staple Cartridge (for Booklet Maker Unit for Finisher-B1) 92
Emptying Punch Waste Container (for Finisher-B1) 93
Replacing Stamp 94

Cleaning the Machine 96

Cleaning the Exterior 96
Cleaning the Interior (LED Printheads) 97
Cleaning the Touch Screen 99
Cleaning the Document Cover and Document Glass 99
Cleaning the White Chute and Constant Velocity Transport Glass 100
Cleaning the Document Feeder Rollers 101

Executing Calibration 103

Printing a Report/List 107

Deleting a Private Charge Print Job with an Invalid User ID 108

Setting Restore Tool 109

4 Machine Status 111

Overview of Machine Status 112

Machine Information 113

General Information 113
Paper Tray Status 114
Print Reports 115
Automatically Printed Reports/Lists 125
Overwrite Hard Disk 127
Print Mode 127
Fax Receiving Mode 130

Faults 132

Supplies 133

Billing Information 134

Billing Information 134
User Account Billing Information 135

5 Tools 137

System Settings Procedure 138

Step1 Entering System Administration Mode 138
Step2 Entering the System Administrator User ID and Passcode 138
Step3 Selecting [Tools] 139
Step4 Selecting a Setting Item on the [Tools] Screen 139
Step5 Setting a Feature 142
Step 6 Exiting System Administration Mode 142

Tools Menu List 143

System Settings 143
Setup 145
Accounting 145
Authentication/Security Settings 145

Common Service Settings 146

Machine Clock/Timers....146
Power Saver Settings....149
Audio Tones....150
Screen/Button Settings....152
Paper Tray Settings....157
Image Quality Adjustment....162
Reports....164
Maintenance....166
Watermark....170
Force Annotation....172
Print Universal Unique ID....174
Notify Job Completion by E-mail....174
Plug-in Settings....175
Other Settings....175

Copy Service Settings....182

Copy Tab - Features Allocation....182
Preset Buttons....183
Copy Defaults....183
Copy Control....189
Original Size Defaults....192
Reduce/Enlarge Presets....192
Custom Colors....193
Annotations - Create Comments....193

Connectivity & Network Setup....194

Port Settings....194
Protocol Settings....200
Machine's E-mail Address/Host Name....205
Proxy Server Settings....206
EP Proxy Server Setup....207
SIP Settings....209
T.38 Settings....212
Outgoing/Incoming E-mail Settings....212
Remote Authentication/Directory Service....214
Security Settings....220
Other Settings....226

Print Service Settings....227

Allocate Memory....227
Delete Form....229
Register Google Cloud Print....229
Other Settings....229

Scan Service Settings....235

Screen Defaults....235
Scan Defaults....236
Scan to PC Defaults....239
Original Size Defaults....240
Output Size Defaults....240
Reduce/Enlarge Presets....241
Other Settings....241

Fax Service Settings....245

Screen Defaults 245
Fax Defaults 246
Fax Control 248
Fax Received Options 255
Reduce/Enlarge Presets 257
Original Size Defaults 257
Local Terminal Information 258
Internet Fax Control 259

E-mail/Internet Fax Service Settings 262

E-mail Control 262

Address Book Settings 266

Folder Service Settings 267

Job Flow Service Settings 269

Media Print Service Settings 270

Stored File Settings 271

Web Browser Setup 274

Setup 276

Create Folder 276
Stored Programming 279
Create Job Flow Sheet 279
Create Job Flow Sheet Keyword 288
Add Address Book Entry 289
Create Fax Group Recipients 299
Add Fax Comment 300
Paper Tray Attributes 300

Accounting 301

Create/View User Accounts 301
View Accounts 305
Reset User Accounts 305
System Administrator's Meter (Copy Jobs) 307
Accounting Type 307
Accounting Login Screen Settings 308
Fax Billing Data 310
Accounting/Billing Device Settings 310

Authentication/Security Settings 313

System Administrator Settings 313
Authentication 315
Allow User to Disable Active Settings 324
Job Status Default 324
Overwrite Hard Disk 325

6 CentreWare Internet Services Settings 327

Installation of CentreWare Internet Services 328

Preparations 328
Configuration on the Machine 328

Starting CentreWare Internet Services 330

Configuring Machine Settings Using CentreWare Internet Services 331

7 Printer Environment Settings 335

Print Overview 336

Installation When Using USB Port 338

Step 1 Preparations 338
Step 2 Configuration on the Machine 338
Step 3 Configuration on the Computer 339
CentreWare Internet Services Setting Items 339

Installation When Using TCP/IP (LPD/Port 9100) 341

Step 1 Preparations 341
Step 2 Configuration on the Machine 341
Step 3 Configuration on the Computer 342
CentreWare Internet Services Setting Items 343

Installation When Using Internet Printing Protocol (IPP) 345

Step 1 Preparations 345
Step 2 Configuration on the Machine 345
Step 3 Configuration on the Computer 346
CentreWare Internet Services Setting Items 347

8 E-mail Environment Settings 349

E-mail Overview 350

Preparations 352

Installation Procedures 355

Step 1 Enabling Port and Setting up TCP/IP 355
Step 2 Configuring E-mail Environment 356
CentreWare Internet Services Setting Items 358

9 Scanner Environment Settings 359

Scan Service Overview 360

Configuration of Store to Folder 362

Step 1 Enabling Port and Setting up TCP/IP 362
Step 2 Registering a Folder 363
Step 3 Configuring a Computer 363

Configuration of Scan to PC 364

Step 1 Preparations 364
Step 2 Enabling Port and Setting up TCP/IP 365
Step 3 Configuration on the Computer 366

Configuration of Scan to My Folder 367

Step1 Preparations 367
Step 2 Enabling SMB Port and Setting up TCP/IP 367
Step 3 Configuring Remote Authentication 368
Step 4 Configuring Scan to My Folder 369
Step5 Configuration on the Computer 371

Configuration of Store to USB 372

Available USB Memory Devices 372
CentreWare Internet Services Setting Items 372

Configuration of Network Scanning (Job Template Scanning) 373

Step 1 Preparations 373
Step 2 Enabling Ports and Setting up TCP/IP 373
Step 3 Configuring the SNMP Port 374
Step 4 Configuration on the Computer 375

Configuration of Job Flow Sheets 376

Step 1 Enabling Ports and Setting up TCP/IP 376
Step 2 Configuring the SNMP Port 376
Step 3 Configuration on the Computer 376

Configuration of Store & Send Link 377

Step 1 Configuring E-mail 377
Step 2 Enabling Authentication 377
Step 3 Other Settings 377
Step 4 CentreWare Internet Services Setting Items 377

Configuration of Store to WSD 379

Step 1 Preparations 379
Step 2 Enabling Port 379
Step 3 Confirmation on the Computer 380

10 Using IP Fax (SIP) 381

IP Fax (SIP) Overview 382

Preparations 383

System Requirements for the Machine 383
Settings by System Configuration 383

Installation Procedures 384

Step 1 Enabling Port and Setting up TCP/IP 384
Step 2 Configuring the SIP User Name 385
Step 3 Configuring Fax Environment 386
Step 4 Configuring the SIP Server 387
Step 5 Registering the VoIP Gateway 388

11 Using the Internet Fax Service 391

Internet Fax Overview 392

Preparations 393

System Requirements for the Machine 393
E-Mail Environment 393

Installation Procedures 394

Step 1 Enabling Port and Setting up TCP/IP 394
Step 2 Configuring E-mail Environment 395
Step 3 Testing the Internet Fax 397

12 Using the Server Fax Service 399

Server Fax Overview 400

Preparations **401**
System Requirements for the Machine 401
Installation Procedure **402**
Installation Overview 402
Step 1 Fax Settings 402
Step 2 Setting the Server Fax Feature 403

13 Encryption and Digital Signature Settings 405

Encryption and Digital Signature Overview **406**
Types of Certificate 406
Certificate Conditions 407
Encryption Features for Communication 408
Encryption and Digital-Signature Features for Scan Files 409
Configuration of HTTP Communications Encryption **410**
Installation Overview 410
Step1 Configuration on the Machine 410
Step2 Configuration on the Computer 412
Configuration of Encryption using IPsec **413**
Installation Overview 413
Step1 Import and Configuration of a Certificate 413
Step2 Configuration on the Machine (Configuration of IPsec) 414
Step3 Configuration on the Computer 415
Configuration of E-mail Encryption/Digital Signature **416**
Installation Overview 416
Step1 Configuration on the Machine 417
Step2 Configuration on Sender and Recipient 417
Configuration of PDF/DocuWorks/XPS Signature **420**
Installation Overview 420
Step1 Configuration on the Machine 420
Step2 Configuration on the Computer 422

14 Authentication and Accounting Features 423

Overview of Authentication and Accounting Feature **424**
Types of User 424
User Roles and Authorization Groups 424
Access Control 426
Types of Authentication 426
Account Administration 428
Services Controlled by Authentication **432**
Overview 432
Combination of Authentication and Account Administration types 432
Authentication for Job Flow Sheets and Folders **435**
Creating / Using Job Flow Sheet 435
Creating / Using Folder 437
Configuration for Authentication **439**

Installation Overview 439
Enabling Authentication 439
Changing the Default Authorization Group Settings 442
Creating an Authorization Group 443

Configuration for IC Card Reader (Optional) 444

Step 1 Preparations 444
Step 2 Logout Method Using the Smart Card 445
Step 3 Registering Smart Card Information 445

Configuration for Account Administration 446

Step 1 Selecting an Accounting Type 446
Step 2 Registering User Information 446

User Authentication Operations 448

Authenticating Login Users 448
Changing Passcode 449

15 Problem Solving 451

Troubleshooting 452

Machine Trouble 453

Image Quality Trouble 458

Trouble during Copying 464

Unable to Copy 464
The Copy Result is Not What was Expected 465

Trouble during Printing 468

Unable to Print 468
The Print Result is Not What was Expected 469

Trouble during Faxing 471

Sending Problems 471
Receiving Problems 475

Trouble during Scanning 481

Unable to Scan with the Machine 481
Unable to Import Scanned Documents to the Computer 482
Unable to Send a Scanned Document over the Network (FTP/SMB) 482
Unable to Send E-mail 484
The Image is not What was Expected 484

Network-related Problems 486

When using SMB 486
When using TCP/IP 486
CentreWare Internet Services Problems 488
E-mail Features Problems 489
Internet/Intranet Connection Problems 489
IPv4 and IPv6 Connection Problems 491

Media Print - Text Trouble 494

Media Print - Photos Trouble 495

Error Code 496

Other Errors 611

Paper Jams **612**
Paper Jams in Trays 1 to 4 613
Paper Jams in Tray 5 613
Paper Jams in Top Left Cover A 615
Paper Jams in Bottom Left Cover B (for 2-tray configuration) 617
Paper Jams in Bottom Left Cover B (for 4-tray configuration) 617
Paper Jams in Top Left Cover C 618
Paper Jams in Duplex Module 619
Paper Jams in Finisher-A1 620
Paper Jams in Finisher-B1 621
Document Jams **623**
Document Jams 623
Stapler Faults **626**
Staple Jams in Staple Cartridge (For Finisher-A1) 627
Staple Jams in Staple Cartridge (For Finisher-B1) 628

16 Appendix **631**
Specifications **632**
Copy Function 632
Print Function 635
Scan Function (Optional) 637
Fax Function (optional) 639
Direct Fax Function (optional) 640
Internet Fax Function (optional) 641
IP Fax (SIP) Function (optional) 641
Duplex Automatic Document Feeder 642
Duplex Function 642
Finisher-A1 (Optional) 643
Finisher-B1 (Optional) 643
Side Tray (optional) 645
Printable Area **646**
Standard Printable Area 646
Extended Printable Area 646
Internal Fonts **648**
Optional Components **651**
Adjust Image Transfer **654**
Adjusting the Transfer Output Value 654
ESC/P-K Emulation **659**
Emulation 659
Output Feature 660
ESC/P-K Emulation Print Features 660
ESC/P-K Emulation Settings 660
Magnification Table 667
Paper Size and Number of Printable Characters 674
PDF Direct Print **677**
PDF Direct Print Settings 677

DocuWorks Direct Print **679**
DocuWorks Direct Print Settings 679
PCL Emulation **681**
Emulation 681
Fonts 681
Output Feature 682
PCL Emulation Settings 683
HP-GL/2 Emulation **688**
Emulation 688
Fonts 688
Output Feature 689
Factory Default Settings 689
HP-GL/2 Emulation Settings 690
Hard Clip Area 695
Printable Area 696
Auto Layout 698
Notes and Restrictions **707**
Notes and Restrictions on the Use of the Machine 707
Notes and Restrictions on the Use of the Copy Feature 711
Notes and Restrictions on the Use of the Print Feature 711
Notes and Restrictions on the Use of the Scan Features 714
Notes and Restrictions on the Use of the Fax Feature 720
Notes and Restrictions on the Use of the E-mail/Internet Fax Feature 722
Notes and Restrictions for IP Fax (SIP) 727
Notes and Restrictions when Connecting with Internet Service Provider 728
Notes and Restrictions on the Interrupt Mode 731
Notes and Restrictions on Folders 732
Notes and Restrictions when Connecting to Internet or Intranet 733
Notes and Restrictions when Operating from Computers 733
Notes and Restrictions on Job Flows 734
Notes and Restrictions on the Security Features 735
Notes and Restrictions on the Authentication and Accounting Features 735
Notes and Restrictions for Using SMB 735
Notes and Restrictions for Using TCP/IP 736
Notes and Restriction for Using Secondary Ethernet (Optional) 737
Notes and Restrictions for Using Bonjour 737
Notes and Restrictions for IPv6 Connection 738
Notes and Restrictions for Print E-mail 739
Passcode Setting for Extended Functions **740**
Available Extended Function and Passcode 740
Using the Telephone **743**
Placing a Call 743
Activity Report **746**
EP System **749**
Automated Meter Reading 749
Check or Maintenance Request of the Machine 749
Automated Alert Notification 749
Timely Delivery of Consumables 749

Remote Modification of the Settings 750
Software Upgrade 750

Index 751

1

Before Using the Machine

Preface

Thank you for selecting DocuCentre-V C2265/C2263 (hereafter referred to as “the machine”).

This guide is intended for system administrators, and provides maintenance information such as how to replace consumables, how to configure network, andtroubleshooting procedures.

The guide assumes that you are familiar with a personal computer and knowledgeable of computer networks. When you need additional information, refer to the manuals provided with the personal computer, operating system, and network products.

After reading this guide, be sure to keep it handy for quick reference. It will be useful in case you forget how to perform operations or if a problem occurs with the machine.

For more information on how to copy, print, scan, and fax, refer to the User Guide. For information about optional components for the Print feature, refer to the guide provided with each optional component.

Warning:This equipment will be inoperable when mains power fails.

When you use this machine, we recommend that you change the system administrator's user ID and passcode immediately after installing the machine.For more information on changing the user ID and passcode, refer to "System Administrator Settings" (P.313).

Types of Manuals

The following guides are provided with the machine.

Accompanying Manuals

■ User Guide

The guide describes all the necessary steps for copy, print, scan, and fax.

This manual is included in the Media (Software/Product Manual).

■ Administrator Guide

The guide is intended for system administrators, and describes how to configure network and how to solve problems that may occur with the machine. This guide alsodescribes daily maintenance and the system settings procedures. This manual is included in the Media (Software/Product Manual).

■ Quick Reference Guide

The guide describes the basic operations of the machine, as well as daily management and maintenance.

■ Security Function Supplementary Guide

The guide is intended for the manager and system administrator of the organization where the machine is installed, and describes the setup procedures related to security.

This manual is included in the Media (Software/Product Manual).

■ Manual (HTML)

The manual describes installation and configuration procedures for print drivers and the printer environment. This manual is included in the Media (Software/Product Manual).

■ Print Driver Help

The help describes the Print features and operations.

■ CentreWare Internet Services Help

The help describes how to change various settings of the machine using a web browser, and how to import scanned data to a computer from the machine.

Important

- To display the online help for CentreWare Internet Services, users need to have the environment to connect to the Internet. The communication fee shall be borne by you.

Guides for Optional Components

Optional components are available for the machine. Some of them come with user guides.

The guides for optional components describe all the necessary steps for using the optional components and for installing the software.

Using This Guide

Organization of This Guide

This guide consists of the following chapters.

■ **Before Using the Machine(P.15)**

Describes the organization of this guide and conventions.

■ **Paper and Other Media(P.47)**

Describes the types of paper and other media that you can use on the machine and how to load media in a tray.

■ **Maintenance(P.77)**

Describes how to replace consumables and to clean the machine.

■ **Machine Status(P.111)**

Describes how to check the faults that occurred on the machine and to print various reports/lists.

■ **Tools(P.137)**

Describes the procedures to set up the system.

■ **CentreWare Internet Services Settings(P.327)**

Describes how to use CentreWare Internet Services.

■ **Printer Environment Settings(P.335)**

Describes the settings to use the Print feature on the machine.

■ **E-mail Environment Settings(P.349)**

Describes the settings to use various services via e-mail on the machine.

■ **Scanner Environment Settings(P.359)**

Describes the settings to use the Scan services on the machine.

■ **Using IP Fax (SIP)(P.381)**

Describes the settings to use the IP Fax (SIP) feature on the machine.

■ **Using the Internet Fax Service(P.391)**

Describes the settings to use the services via the Internet Fax service on the machine.

■ **Using the Server Fax Service(P.399)**

Describes how to use the Server Fax service on the machine.

■ **Encryption and Digital Signature Settings(P.405)**

Describes how to configure the machine to use the Encryption and the Digital Signature features with your communications and documents.

■ Authentication and Accounting Features(P.423)

The machine has the Authentication feature to restrict the availability of services for each feature and the Accounting feature to manage the use of each feature based on the Login Type selected.

■ Problem Solving(P.451)

Describes troubleshooting procedures to solve the problems with the machine.

■ Appendix(P.631)

Describes the specifications of the machine, optional accessories, and cautions/restrictions.

Conventions

- The screen shots and illustrations used in this guide vary depending on the machine configuration and optional components installed. Some of the items in the screen shots may not be displayed or available depending on your machine configuration.
- The procedures in this guide may vary depending on the driver and utility software being used due to the upgrades.
- In this document, "Computer" refers to a personal computer or workstation.
- The following terms are used in this guide:

Important
- Important information that you should read.

Note
- Additional information on operations or features.

- The following symbols are used in this guide:

" "	• A cross-reference included in this guide. • Names of media,features, touch screen messages and input text.
[ ]	• Folders, files, applications, button or menu names displayed on the touch screen. • Names of menus, commands, windows, or dialog boxes displayed on the computer screen and their buttons and menu names.
< > button	• Hardware buttons on the control panel.
< > key	• Keys on the keyboard of the computer.
>	• Path to a certain item within a procedure on the control panel. For example: When you see the procedure "select [Tools] >[Setup] > [Create Folder]", this means that you need to select [Tools], select [Setup], and then select [Create Folder]. • Path to a certain item within a procedure on a computer. For example: When you see the procedure "to search for files and folders, click [Start] > [Search] > [For Files or Folders]", this means that you need to click [Start], click [Search], and then click [For Files or Folders] to search for files and folders. • Cross-reference For example: "Refer to "Tools" > "Common Service Settings" > "Audio Tones" in the Administrator Guide." The sentence above means that it is recommended to refer to the section "Audio Tones", in "Common Service Settings" in chapter "Tools" of the Administrator Guide.

- Orientation of documents or paper is described in this guide as follows:

  , , Long Edge Feed (LEF): Loading the document or paper in portrait orientation when viewed from the front of the machine.

, , Short Edge Feed (SEF): Loading the document or paper in landscape orientation when viewed from the front of the machine.

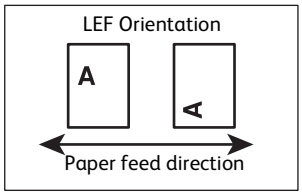

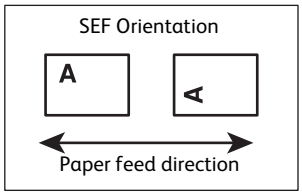

Interface Cables

When you connect the machine directly to your computer, use the USB interface.
When you connect the machine to a network, use the Ethernet interface.

Using the USB Interface

The USB interface of the machine supports USB 2.0.
This section describes the installation procedures for the USB interface.

1. Press the power switch to switch off the power.
2. Make sure that the touch screen is blank and the <Power Saver> button is not lit.
3. Open the front cover.
4. Press the main power switch to the [◯] position to switch off the main power.
5. Remove the rear right cover.
6. Connect a USB cable to the USB 2.0 interface connector.

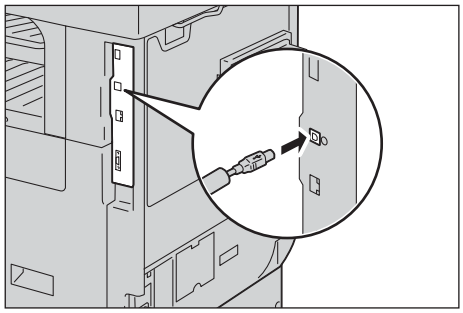

7. Return the rear right cover to its original position.
8. Connect the other end of the USB cable to the computer.
9. Press the main power switch to the [|] position to switch on the main power.
10. Close the front cover.
11. Press the power switch to switch on the power.
12. Restart the computer.

Reference

- For more information on setting items, refer to "Printer Environment Settings" (P.335).

Using the Ethernet Interface

The Ethernet interface of the machine supports the following three types.

- 1000BASE-T

- 100BASE-TX
- 10BASE-T

Note

- The machine supports IEEE802.3az (a compliance standard of wired LAN) which reduces the power consumption of the Ethernet equipments while suspending data transmission. To use this feature, both of the equipments need to support IEEE802.3az.

This section describes the installation procedures for the Ethernet interface.

1. Press the power switch to switch off the power.
2. Make sure that the touch screen is blank and the <Power Saver>button does not light up.
3. Open the front cover.
4. Press the main power switch to the [○] position to switch off the main power.
5. Connect a network cable to the Ethernet interface connector.
   - When the Secondary Ethernet Kit (optional) is not installed

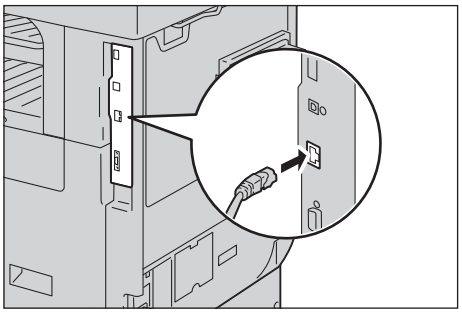

   - When the Secondary Ethernet Kit (optional) is installed.

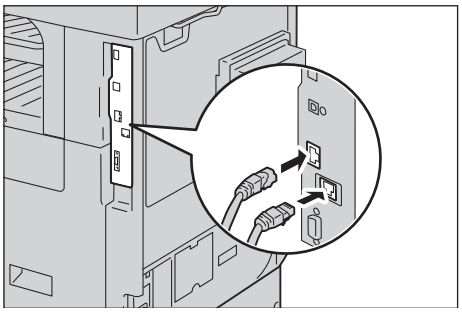

Note

- Prepare a network cable suitable for your network connection. When you replace the network cable, contact our Customer Support Center.

6. Press the main power switch to the [|] position to switch on the main power.
7. Close the front cover.
8. Press the power switch to switch on the power.

Reference

- For more information on setting items, refer to "Printer Environment Settings" (P.335).

Power Saver Mode

The machine is equipped with the Power Saver mode that reduces the power consumption by saving the electricity to the machine when no copy or print data is received for a specified time.

The Power Saver has two modes: the Low Power mode and the Sleep mode.

When you do not use the machine for a specified period of time, the machine enters the Low Power mode. When it reaches the specified time in the Low Power mode, the machine then enters the Sleep mode.

Changing the Interval for Entering Power Saver Mode

You can set the time to elapse until the machine enters the Low Power mode and the Sleep mode from 1 to 240 minutes in 1 minute increments.

Note

- If the preset time period is the same for the Low Power mode and the Sleep mode, the machine directly enters the Sleep mode without entering the Low Power mode first.

Note

- When the machine operates normal printing, Sample Set print, or printing received fax documents while the control panel remains lit off and the machine is in the Power Saver mode, only the output device exits the Power Server mode. In this case, the machine enters the Sleep mode 15 seconds later without following this setting by factory default.

1 Press the <Log In/Out> button.

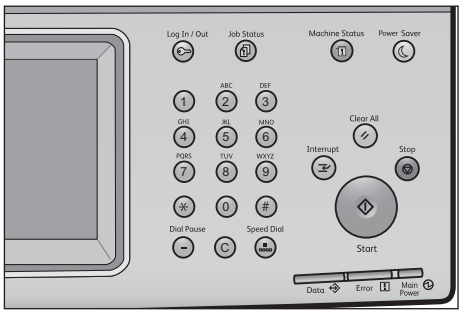

2 Enter the system administrator's user ID with the numeric keypad or the keyboard displayed on the screen, and select [Enter]. When a passcode is required, select [Next] and enter the system administrator's passcode, and select [Enter].

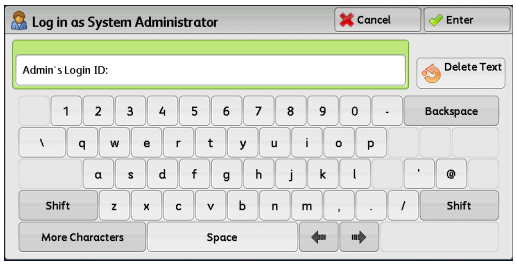

Note

- The default user ID is "11111".
- The default passcode is "x-admin".

3 Select [Tools] on the Services Home screen.

Note

- When the Services Home screen is not displayed on the touch screen, press the <Services Home> button.

4 Select [System Settings] > [Common Service Settings] > [Power Saver Settings].

5 Select [Power Saver Timers], and then select [Change Settings].

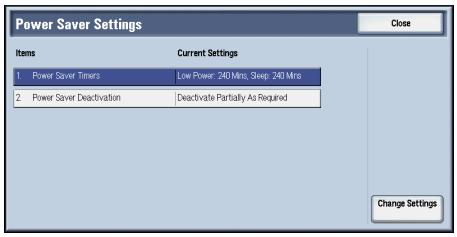

6 Using[▲]and[▼], set the time to elapse until entering the Power Saver mode, in 1 minute increments.

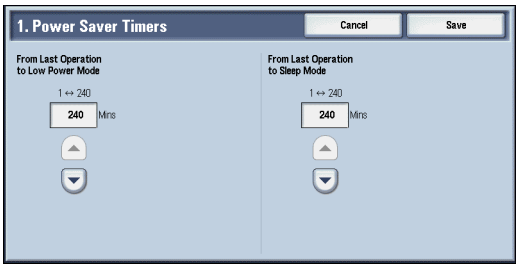

■From Last Operation to Low Power Mode

Set the time to elapse from the last operation until the machine enters the Low Power mode.

Note

- The default value for [From Last Operation to Low Power Mode] is [1] minutes.You cannot disable the Low Power mode.

■From Last Operation to Sleep Mode

Set the time to elapse from the last operation until the machine enters the Sleep mode.

Note

- The default value for [From Last Operation to Sleep Mode] is [1] minutes. To make the machine enter the Low Power mode set a longer period of time for [From Last Operation to Sleep Mode] than for [From Last Operation to Low Power Mode].

7 Select [Save].

8 Select [Close] repeatedly until the [Tools] screen is displayed.

9 Select [Close].

Warmer Mode

Depending on the operating environment, temperature rise in the machine may cause condensation when the machine exits the Sleep mode. You can use the Warmer mode to prevent or reduce condensation.

We recommend that you enable this mode when the season changes.

Note

- For some models, [Warmer Mode] may not be displayed depending on the setting by our service representative. For more information, contact our Customer Support Center.
- During operation of the Warmer mode, the machine does not enter the Sleep mode.

Setting the Warmer Mode

1 Press the <Log In/Out> button.

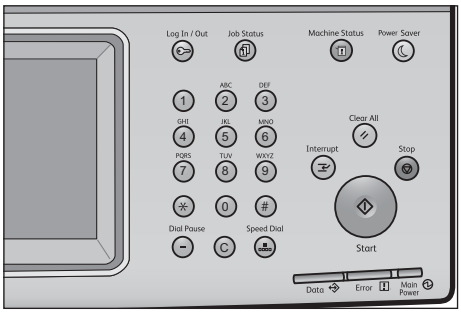

2 Enter the system administrator's user ID with the numeric keypad or the keyboard displayed on the screen, and select [Enter]. When a passcode is required, select [Next] and enter the system administrator's passcode, and select [Enter].

Note

- The default user ID is "11111".
- The default passcode is "x-admin".

3 Select [Tools] on the Services Home screen.

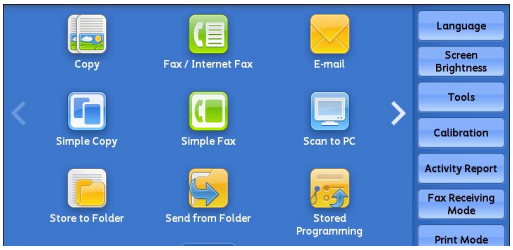

Note

- When the Services Home screen is not displayed on the touch screen, press the <Services Home> button.

4 Select [System Settings] > [Common Service Settings] > [Machine Clock/Timers].

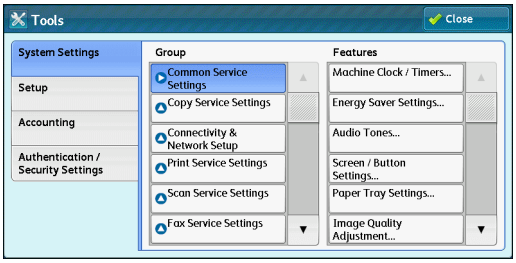

5 Select [Warmer Mode], and then select [Change Settings].

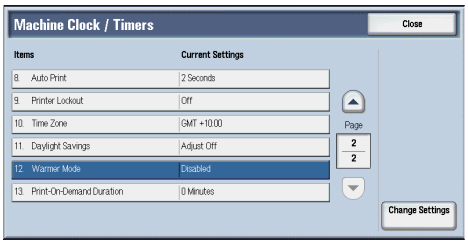

Note

- Select[▲]to display the previous screen or[▼]to display the next screen.

6 Select [On].

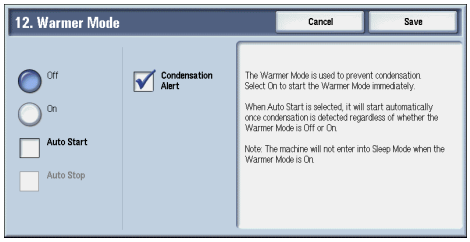

Note

- If you select [Off], the machine will not enter the Warmer mode. To display a message when condensation may have occurred, select [Condensation Alert].

7 Using[▲]and[▼], set the start time and duration of the Warmer mode.

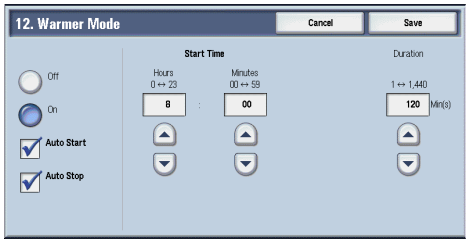

■Start Time

Set the start time of the Warmer mode.

■Duration

Set the duration of the Warmer mode between 1 to 1440 minutes in 1 minute increments.

■Auto Start

Select the check box to automatically switch the Warmer mode to [On] when condensation continued for a specific period of time.

■Auto Stop

Select the check box to automatically switch the Warmer mode to [Off] after a specified period of absence of condensation has elapsed.

Note

- If the power is off at the time specified in [Start Time], the machine will not enter the Warmer mode.
- While the Warmer mode is enabled, the machine will not enter the Sleep mode and prevents or reduces condensation.
- [Auto Start] allows you to automatically enable the Warmer mode when the machine detects condensation in future years.

8 Select [Save].

9 Select [Close] repeatedly until the Services Home screen is displayed.

Note

- When you configure settings under [System Settings] or [Setup] and then press the <Services Home> button, the screen directly goes back to the Services Home screen.

Customizing the Control Panel

You can change the services displayed on the touch screen or the features assigned to the buttons to make best use of the machine.

This section describes how to change the screen default, the services displayed after Auto Clear, the services displayed on the Services Home screen, and the services assigned to the custom buttons, and how to adjust the screen brightness.

Note

- For information on how to change the other settings of the control panel, refer to Screen/Button Settings (P.152).

Changing the Screen Default

You can change the screen displayed when the machine is turned on or the Power Saver mode is deactivated. The Services Home screen is displayed by factory default.

1 Press the <Log In/Out> button.

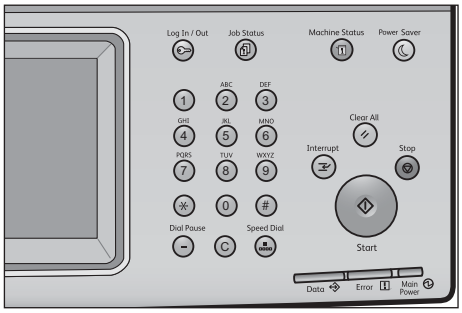

2 Enter the system administrator's user ID with the numeric keypad or the keyboard displayed on the screen, and select [Enter]. When a passcode is required, select [Next] and enter the system administrator's passcode, and select [Enter].

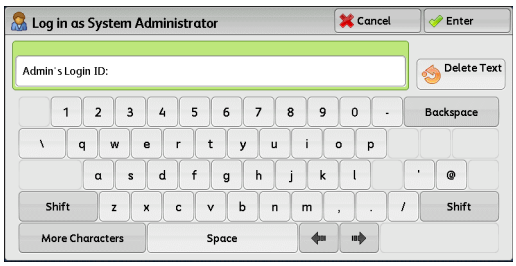

Note

- The default user ID is "11111".
- The default passcode is "x-admin".

3 Select [Tools] on the Services Home screen.

Note

- When the Services Home screen is not displayed on the touch screen, press the <Services Home> button.

4 Select [System Settings] > [Common Service Settings] > [Screen/Button Settings].

5 Select [Screen Default], and then select [Change Settings].

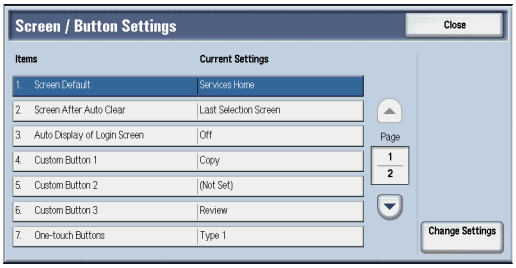

Note

- Select[▲]to display the previous screen or[▼]to display the next screen.

6 Select a service you want to display.

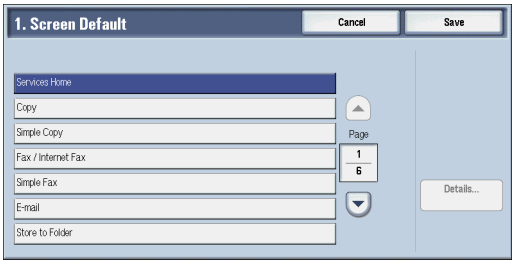

Note

- Select[▲]to display the previous screen or[▼]to display the next screen.

7 Select [Save].

Setting the Screen After Auto Clear

You can select the screen to be displayed after Auto Clear from [Last Selection Screen] or [Services Home].

Reference

- For information on Auto Clear, refer to "Auto Clear" (P.148)"

1 Press the <Log In/Out> button.

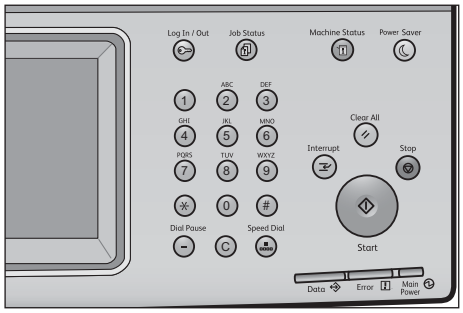

2 Enter the system administrator's user ID with the numeric keypad or the keyboard displayed on the screen, and select [Enter].

When a passcode is required, select [Next] and enter the system administrator's passcode, and select [Enter].

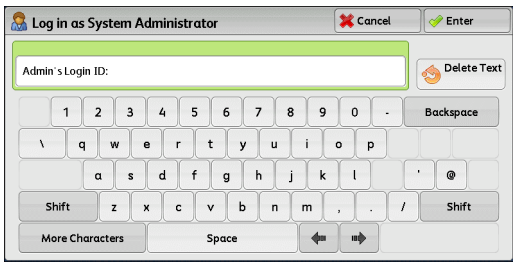

Note

- The default user ID is "11111".
- The default passcode is "x-admin".

3 Select [Tools] on the Services Home screen.

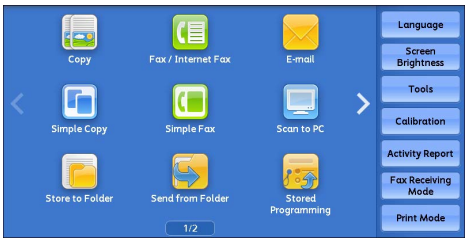

Note

- When the Services Home screen is not displayed on the touch screen, press the <Services Home> button.

4 Select [System Settings] > [Common Service Settings] > [Screen/Button Settings].

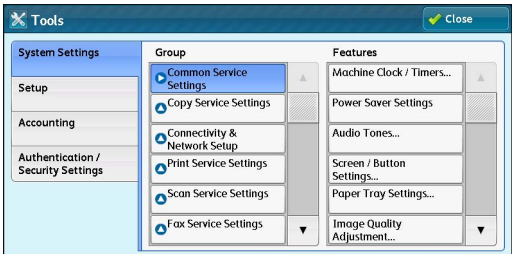

5 Select [Screen After Auto Clear], and then select [Change Settings].

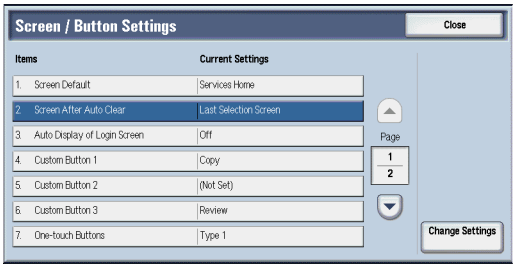

Note

- Select[▲]to display the previous screen or[▼]to display the next screen.

6 Select [Last Selection Screen] or [Services Home].

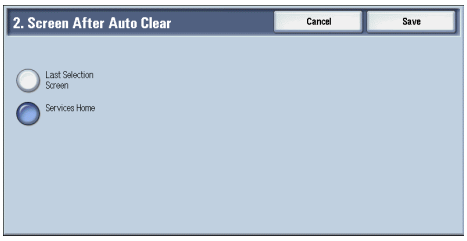

7 Select [Save].

Customizing the Button Layout

You can customize the services and the button layout displayed on the Services Home screen when you press the <Services Home> button on the control panel.

Note

- Services not supported by the machine will not be displayed on the screen. Grayed out buttons cannot be used as a result of malfunctioning.

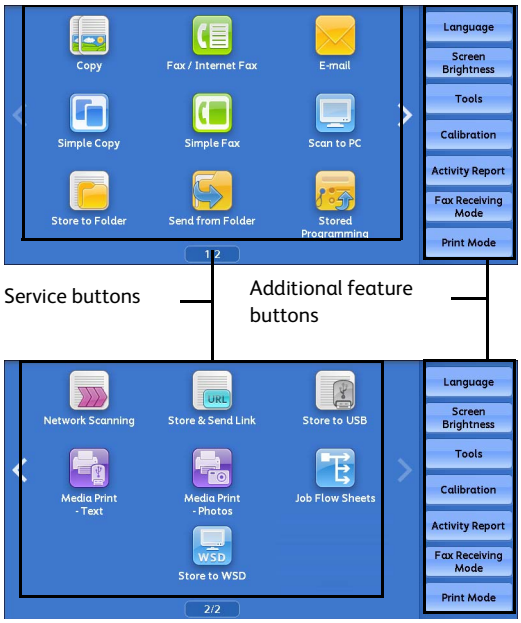

The following services can be displayed on the service buttons.

Note

- The available services vary depending on the installed options.

- Copy
- Fax/Internet Fax
- E-mail
- Simple Copy
- Simple Fax
- Scan to PC
- Store to Folder
- Network Scanning
- Store to USB
- Send from Folder
- Fax Received - Line 1 (Folder NNN)
- Fax Received - Line 2 (Folder NNN)
- Fax Received - Line 3 (Folder NNN)
- Fax Received - SIP (Folder NNN)

Note

- The folder number specified in Folder Selector Setup will be displayed instead of "NNN". When the folder number is not specified, "(Folder Not Set)" will be displayed instead of "NNN".

- Stored Programming

Note
- This services is displayed when the User Authentication feature is used.

- Store & Send Link

Note
- This services is displayed when the User Authentication feature is used.

- Media Print - Text
- Media Print - Photos
- Secure Print
- Sample Set
- Delayed Print
- Charge Print
- Private Charge Print
- Store to WSD

Note
- WSD stands for Web Services on Devices.

- Custom Services

Note
- [Custom Services] can be displayed when any custom service is installed on the machine. For more information on the custom services, contact our Customer Support Center.

The following services can be displayed on the additional feature buttons.

- Language
- Screen Brightness
- Setup
- Calibration
- Activity Report
- Fax Receiving Mode
- Print Mode
- Lockout Printer/Release Printer

Note
- [Lockout Printer]/[Release Printer] is not displayed by default. To display this feature, select [Allow User to Lock Out] in [Printer Lockout] under [Tools] > [System Settings] > [Common Service Settings] > [Machine Clock/Timers], and then assign [Disable Auto Printing] to a button on the [Services Home - Additional Features] screen.

Services Home

You can select service buttons, which are displayed on the Services Home screen.

If you select [(Not Assigned)], the position of the selected button becomes blank.

1 Press the <Log In/Out> button.

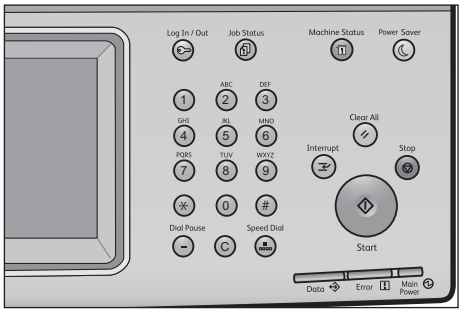

2 Enter the system administrator's user ID with the numeric keypad or the keyboard displayed on the screen, and select [Enter].

When a passcode is required, select [Next] and enter the system administrator's passcode, and select [Enter].

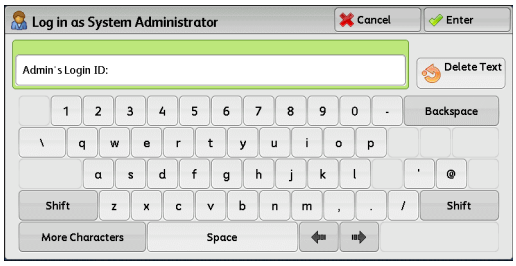

Note

- The default user ID is "11111".
- The default passcode is "x-admin".

3 Select [Tools] on the Services Home screen.

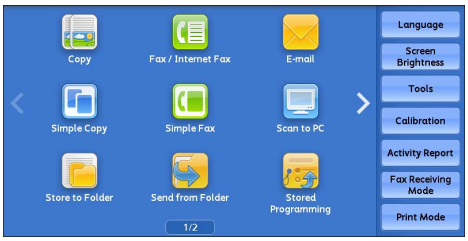

Note

- When the Services Home screen is not displayed on the touch screen, press the <Services Home> button.

4 Select [System Settings] > [Common Service Settings] > [Screen/Button Settings].

5 Select [Services Home], and then select [Change Settings].

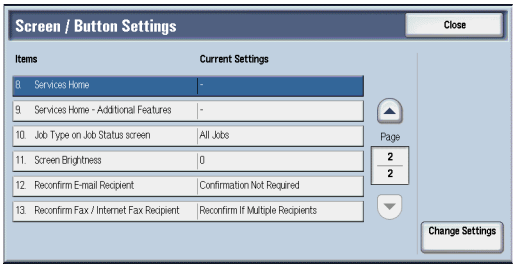

Note

- Select[▲]to display the previous screen or[▼]to display the next screen.

6 Select the position where you want to assign a service.

Note

- Select[▲]to display the previous screen or[▼]to display the next screen.
- The layout of the buttons in this screen corresponds to the layout of those on the Services Home screen.

7 Select a service you want to display on the Services Home screen.

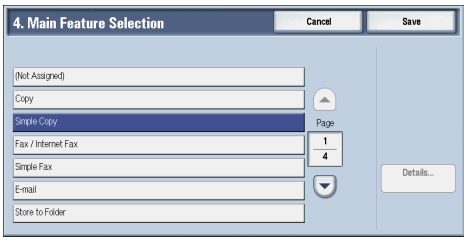

Note

- Select[▲]to display the previous screen or[▼]to display the next screen.
- You cannot assign the same feature to more than one button.

8 Select [Save].

9 Select [Save].

Services Home - Additional Features

You can select additional feature buttons, which are displayed on the Services Home screen.

If you select [(Not Assigned)], the position of the selected button becomes blank.

You cannot assign [Setup] to [(Not Assigned)]. If you do not want to display the [Setup] button, select the [Show this in Admin mode] check box.

1 Press the <Log In/Out> button.

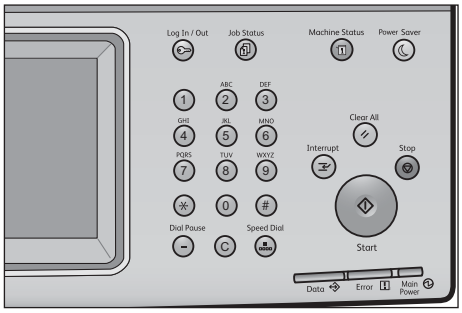

2 Enter the system administrator's user ID with the numeric keypad or the keyboard displayed on the screen, and select [Enter].

When a passcode is required, select [Next] and enter the system administrator's passcode, and select [Enter].

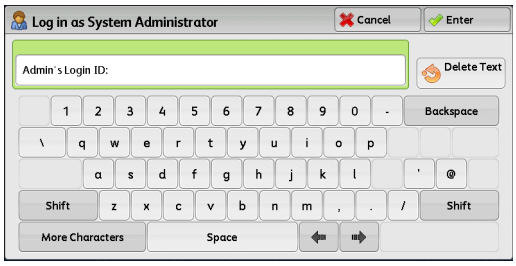

Note

- The default user ID is "11111".
- The default passcode is "x-admin".

3 Select [Tools] on the Services Home screen.

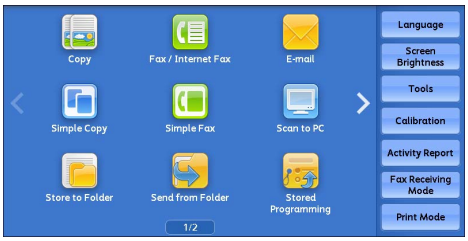

Note

- When the Services Home screen is not displayed on the touch screen, press the <Services Home> button.

4 Select [System Settings] > [Common Service Settings] > [Screen/Button Settings].

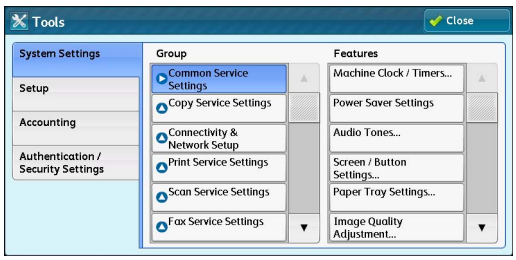

5 Select [Services Home - Additional Features], and then select [Change Settings].

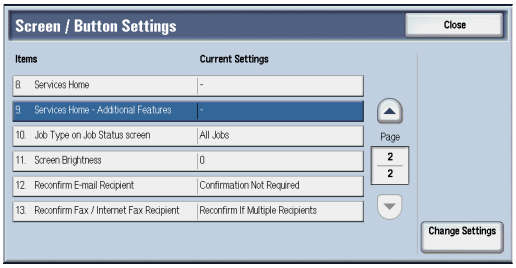

Note

- Select[▲]to display the previous screen or[▼]to display the next screen.

6 Select the position where you want to assign an additional feature.

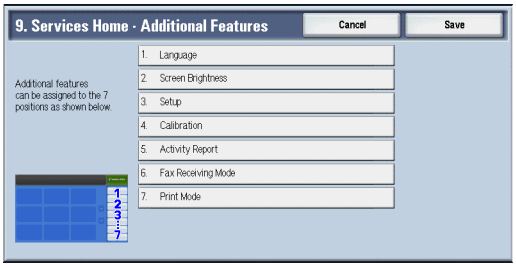

Note

- Select[▲]to display the previous screen or[▼]to display the next screen
- The layout of the buttons in this screen corresponds to the layout of those on the Services Home screen.

7 Select a service you want to display on the Services Home screen.

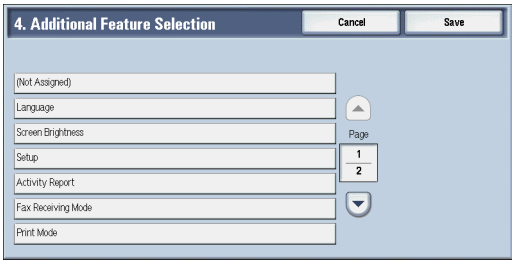

Note

- Select[▲]to display the previous screen or[▼]to display the next screen.
- You cannot assign the same feature to more than one button.

8 Select [Save].

9 Select [Save].

Assigning Services to the Custom Buttons

You can assign services to the <Copy>, <(Not in Use)>, and <Review> buttons on the control panel.

Assigning a service to a custom button allows you to switch to this service without having to return to the Services Home screen. If you do not need to assign any service to a custom button, select [(Not Set)].

By factory default, the following services are assigned to each button: [Copy] for the <Copy> button, [Not in use] for the <(Not in Use)> button(only for the machine with the Fax service) and [Review] for the <Review> button.

This section describes how to assign [Send from Folder] to the <(Not in Use)> button, as an example.

Note

- After you change the assignment, apply the labels provided with the machine. When you assign a service for which no label is provided, use a blank label and write down the service name with a permanent marker. The labels include the services that are not supported by the machine.
- "Fax" is assigned to <Custom Button 2> only when the Fax service is available to the model. Use a "Fax" label on "Not in Use" on the control panel. If Fax is not available, "Fax" is not assigned to this button.

1 Press the <Log In/Out> button.

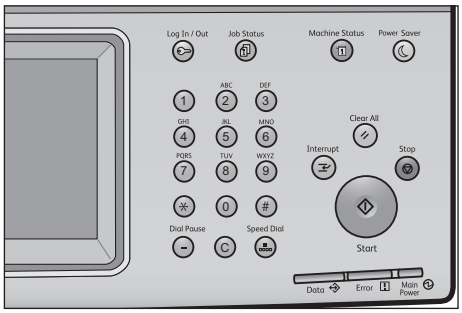

2 Enter the system administrator's user ID with the numeric keypad or the keyboard displayed on the screen, and select [Enter].

When a passcode is required, select [Next] and enter the system administrator's passcode, and select [Enter].

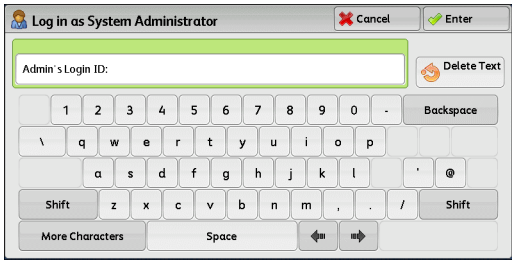

Note

- The default user ID is "11111".
- The default passcode is "x-admin".

3 Select [Tools] on the Services Home screen.

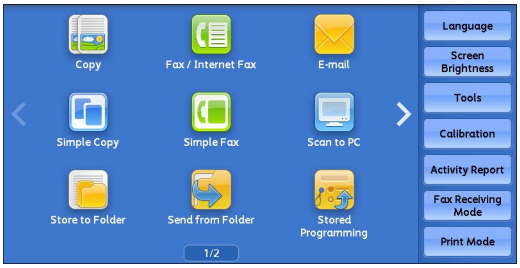

Note

- When the Services Home screen is not displayed on the touch screen, press the <Services Home> button.

4 Select [System Settings] > [Common Service Settings] > [Screen/Button Settings].

5 Select [Custom Button 2], and then select [Change Settings].

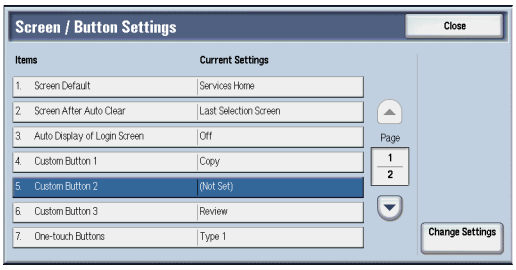

Note

- Select[▲]to display the previous screen or[▼]to display the next screen.

6 Select [Send from Folder].

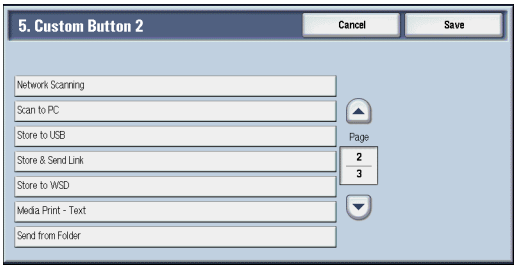

Note

- Select[▲]to display the previous screen or[▼]to display the next screen.

7 Select [Save].

Adjusting Screen Brightness

You can adjust the screen brightness of the screen on the Services Home screen.

1 Select [Screen Brightness] on the Services Home screen.

2 Press [+] or [-] to adjust the screen brightness.

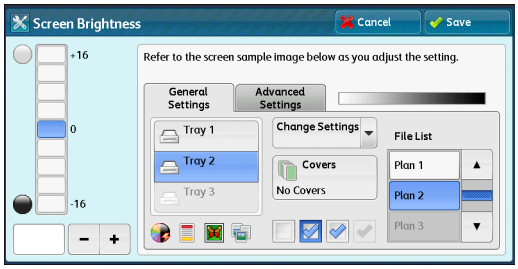

3 Select [Save].

Reference

- To adjust the screen brightness from the [Tools] screen, refer to "Screen Brightness" (P.154).

Touch Screen

On the touch screen of the machine, you can switch pages and scroll a list by the following operations.

Note

- The touch screen of the control panel used in the machine is pressure-sensitive. Adjust the power to touch the screen.
- You can set whether to enable flick and double-tap or not. For more information, refer to "Screen/Button Settings" (P.152).

Drag

Slide your finger to the position desired with your finger touched the touch screen. Drag the touch screen from side to side to switch pages.

Drag the touch screen up and down to scroll a list.

Note

- During drag, scrolling stops when you move your finger away from the touch screen.

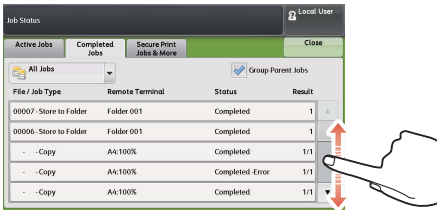

Flick

Slide your finger quickly to the position desired and release it.

Flick the touch screen from side to side or up and down to switch pages.

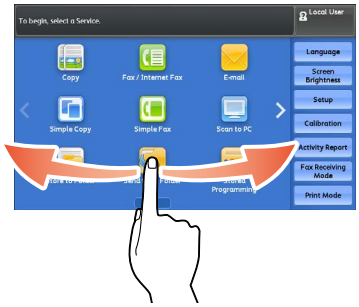

Flick the touch screen up and down to scroll a list.

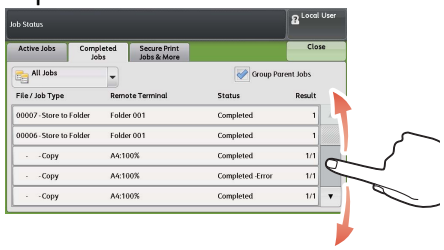

Note

- During flick, scrolling continues for a while even after you move your finger away from the touch screen.

Tap

Touch the touch screen and move your finger away from the screen quickly. To tap the same position of the screen twice is called double-tap.

Tap the touch screen to switch the thumbnail bar to be displayed or not.

Note

- The operation of pinch in or pinch out (moving two fingers inward or outward) to zoom in or out screens is not supported.

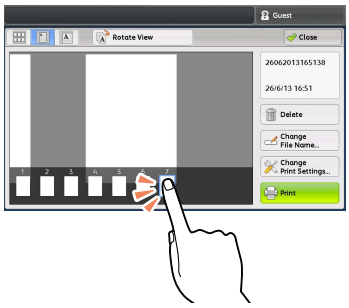

Double-tap a previewed image to enlarge the image.

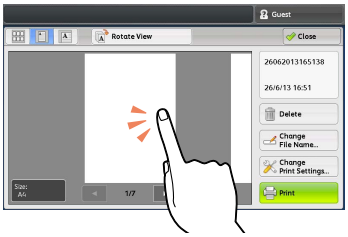

Important Security Instructions

The Security Warning screen is displayed before the Services Home screen when any one of the following conditions is fulfilled and you enter the System Administration mode.

- The system administrator's user ID and passcode are default values.
- The SNMP protocol's community name and authentication password are default values.
- The Global IP Address is used and [Login Type] is set to [No Login Required].

To use the machine more safely, we recommend that you change the settings immediately after installing the machine.

- Change the system administrator's user ID and passcode, and SNMP protocol's community name and authentication password from the default values.

  Changing these settings prevents the machine from the malicious person's attacks (changing settings or exploitation of information).

Note

- Changing the system administrator's user ID and passcode, and SNMP protocol's community name and authentication password from the default values affects the behavior of cooperative software or utilities. Check the influence before changing these settings.

- When using the Global IP Address on the machine, set the IP filtering setting to prevent the machine from illegal access from an external network (browsing job history or accessing folders).
- Set [Login Type] to [Login to Local Accounts] or [Login to Remote Accounts].

  Select [Login to Local Accounts] to use the user information registered on the machine to manage authentication. Only the users who have succeeded in the authentication can use the machine. When using this method, entering user ID or using a smart card is required to log in.

  Select [Login to Remote Accounts] to use the user information registered on a remote authentication server to manage authentication.

For information on how to change the system administrator's user ID and passcode, refer to "System Administrator Settings" (P.313).

For information on how to change the SNMP authentication information, refer to the help of CentreWare Internet Services.

For information on how to set the IP filtering setting, refer to the help of CentreWare Internet Services.

For information on how to set the login type, refer to "Login Type" (P.315) For more information, contact our Customer Support Center.

Important

- To display the online help for CentreWare Internet Services, users need to have the environment to connect to the Internet. The communication fee shall be borne by you.

Entering Text

During operations, a screen for entering text sometimes appears. The following describes how to enter text.

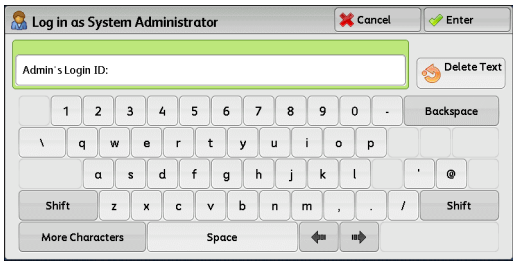

You can enter the following characters: numerals, alphabets, and symbols.

Item	Description
Entering alphabets and numerals	To enter uppercase letters, select [Shift]. To return to the lowercase letters, select [Shift] again.
Entering symbols	Select [More Characters]. **Note** • Depending on the keyboard, you can select a symbol from the pull-up options displayed on the bottom left of the screen.
Entering a space	Select [Space].
Deleting characters	Select [Backspace] to delete one character at a time. Select [Delete Text] to delete all characters.

2

Paper and Other Media

Paper Types

This section describes the kinds of paper available for this machine.

Use of inappropriate paper may result in paper jams, cause reduced print quality, malfunctions and other trouble. To make full and effective use of the machine's performance, we recommend using only paper recommended by Fuji Xerox.

If you want to use paper not recommended by Fuji Xerox, contact our Customer Support Center.

⚠WARNING

Do not use conductive paper such as origami paper, carbonic paper or conductivelycoated paper. When paper jam occurs, it may cause short-circuit and eventually a fire accident.

Important

- Moisture generated by water, rain, or vapor may cause the printed images to fade. For more information, contact our Customer Support Center.

Loadable Quantity and Weight for Supported Paper

Paper Trays	Basis Weight/ Ream Weight	Loadable Quantity*1
Tray 1 to 4*2	60 to 256 gsm Ream Weight: 51.6 - 220.1 kg	500 sheets
Tray 5	60 to 216 gsm Ream Weight: 51.6 - 185.7 kg	Up to 5 mm 45 sheets

*1 : When using 80 gsm paper
*2 : Trays 2 to 4 are optional for some models.

Important

- Printing on paper that differs from the paper type and size selected in the print driver, or printing from a tray that does not support the loaded paper may result in a paper jam. To ensure correct printing, select the correct paper size, paper type, and paper tray.

Note

- Basis weight is the weight of 1 m of a paper sheet.
- Ream weight is the weight of 1,000 sheets of duodecimo size (788 x 1,091 mm) paper.
- When copying on non-standard size paper from Tray 5, you must enter the paper size. Furthermore, if you frequently copy on non-standard size paper, you can preset the size on the machine. That size then appears under [Standard Sizes] on the [Tray 5] screen. For more information on the settings, refer to "Tray 5 - Paper Size Defaults" (P.159).
- Most ideal image quality with the paper can be obtained by setting the image quality for each type of paper. For more information on the settings, refer to "Image Quality" (P.160).

Supported Paper Type

Standard Paper

When printing or copying on commonly used paper (plain paper), use paper meeting the standards described below. To copy or print as clear as possible, we recommend the following standard paper.

Important

- The paper performance may not be guaranteed depending on the manufacturer of the paper being used. For more information, contact our Customer Support Center.

Paper Name	Basis Weight (gsm)	Paper Type*1	Image Quality*2	Notes/Countermeasure
Xerox Business 4200	75	Plain	Plain A	-
Xerox Color Xpressions Select	90	Bond	Plain F	-
Xerox Premier	80	Plain	Plain D	-
Xerox Digital Colour Colotech+ GOLD	90	Bond	Plain F	-
P	64	Plain	Plain A	-
Colotech+	90	Bond	Plain F	-
J-Paper	75	Plain	Plain A	-
Business	80	Plain	Plain D	-
Premier	80	Plain	Plain D	-

*1 : Select the paper type setting for the paper loaded on a tray. For more information, refer to "Changing the Paper Settings" (P.72).

*2 : Most ideal image quality with the paper can be obtained by setting the image quality for each type of paper. For more information on the settings, refer to "Image Quality" (P.160).

Semi Standard Paper

In addition to the standard paper, the following paper also can be used.

Important

- The paper performance may not be guaranteed depending on the manufacturer of the paper being used. For more information, contact our Customer Support Center.

Paper Name	Basis Weight (gsm)	Paper Type*1	Image Quality*2	Notes/Countermeasure
Xerox Business 4200 (8.5 x 11" with 3 holes and 8.5 x 14")	75	Plain	Plain A	-
Xerox Color Xpressions Select (8.5 x 11 with 3 holes and 8.5 x 14)	90	Bond	Plain F	-
Xerox Premier	90	Bond	Plain F	-
Xerox Exclusive	80	Plain	Plain D	-
Xerox Exclusive (4-hole)	80	Plain	Plain D	-
Xerox Digital Colour Colotech+	90	Bond	Plain F	-
Xerox Digital Colour Colotech+	100	Bond	Plain F	-
Xerox Digital Colour Colotech+ GOLD	100	Bond	Plain F	-
M-Paper	80	Plain	Plain D	-
Business +	80	Plain	Plain D	-
Business +	70	Plain	Plain A	-
Business +	75	Plain	Plain A	-
Business +	80	Plain	Plain D	-
Performer	70	Plain	Plain A	-

Performer	80	Plain	Plain D	-
Performer +	70	Plain	Plain A	-
Performer +	80	Plain	Plain D	-
Performa Plus	80	Plain	Plain D	-
Xcite	80	Plain	Plain D	-
Xplore	70	Plain	Plain A	-
Astro Extra	70	Plain	Plain A	-
Astro Extra	80	Plain	Plain D	-
Xceed	70	Plain	Plain A	-
Xceed	80	Plain	Plain D	-
Profession al	70	Plain	Plain A	-
Profession al	80	Plain	Plain D	-
Xpress Paper	70	Plain	Plain A	-
Premier Fsc	80	Plain	Plain D	-
Performer A4 75gsm White Fsc	75	Plain	Plain A	-
Star (Package: Orange)	70	Plain	Plain A	-

*1 : Select the paper type setting for the paper loaded on a tray. For more information, refer to "Changing the Paper Settings" (P.72).

*2 : Most ideal image quality with the paper can be obtained by setting the image quality for each type of paper. For moreinformation on the settings, refer to "Image Quality" (P.160).

Usable Paper

In addition to the standard paper, the following paper also can be used.

Important

- The paper performance may not be guaranteed depending on the manufacturer of the paper being used. For more information, contact our Customer Support Center.

Paper Name	Basis Weight (gsm)	Paper Type*1	Image Quality*2	Notes/Countermeasure
Xerox Business Recycled Paper	75	Plain	Plain A	-
Xerox Business Recycled Paper (3-hole)	75	Plain	Plain A	-
Xerox Color Xpressions Elite	105	Bond	Plain F	If the paper is jammed, fan the paper before loading. If jams still occur, feed one sheet at a time.
Xerox Color Xpressions Elite (3-hole)	105	Bond	Plain F	
Xerox Color Xpressions Elite	120	Heavyweight	Heavyweight (HW) A	
Xerox Color Xpressions Elite	163	Heavyweight	Heavyweight (HW) A	
Xerox Color Xpressions Elite	215	Extra Heavyweight	Extra Heavyweight (X-HW) A	
Xerox Color Xpressions Planet 20	105	Bond	Plain F	-
Xerox Color Xpressions Planet 20	175	Extra Heavyweight	Extra Heavyweight (X-HW) A	-
Xerox Color Xpressions Planet 20	215	Extra Heavyweight	Extra Heavyweight (X-HW) A	-

Xerox 90# Index Stock	163	Heavyweight	Heavyweight (HW) A	-
Xerox 110# Index Stock	199	Extra Heavyweight	Extra Heavyweight (X-HW) A	-
Monarch	75-90	Envelope	-	Soft envelopes may be jammed in a high-temperature or humid condition.
Com10	75-90	Envelope		
Xerox Premier	60	Plain	Plain A	-
Xerox Premier	120	Heavyweight	Heavyweight (HW) A	-
Xerox Business	80	Plain	Plain D	-
Xerox Recycled	80	Plain	Plain D	-
Xerox Recycled Supreme TCF	80	Plain	Plain D	-
Xerox Exclusive	90	Plain	Plain F	-
Xerox Digital Colour Impressions	80	Plain	Plain D	-
Xerox Digital Colour Impressions	90	Bond	Plain F	-
Xerox Digital Colour Impressions	100	Bond	Plain F	-
Xerox Digital Colour Impressions	120	Heavyweight	Heavyweight (HW) A	-
Xerox Digital Colour Impressions	160	Heavyweight	Heavyweight (HW) A	-

Xerox Digital Colour Impressio ns	250	Extra Heavyweight	Extra Heavyweight (X-HW) A	-
Xerox Digital Colour Colotech+	120	Heavyweight	Heavyweight (HW) A	-
Xerox Digital Colour Colotech+	160	Heavyweight	Heavyweight (HW) A	-
Xerox Digital Colour Colotech+	200	Extra Heavyweight	Extra Heavyweight (X-HW) A	-
Xerox Digital Colour Colotech+	220	Extra Heavyweight	Extra Heavyweight (X-HW) A	-
Xerox Digital Colour Colotech+	250	Extra Heavyweight	Extra Heavyweight (X-HW) A	-
Xerox Digital Colour Colotech+ GOLD	120	Heavyweight	Heavyweight (HW) A	-
Xerox Digital Colour Colotech+ GOLD	160	Heavyweight	Heavyweight (HW) A	-
Xerox Digital Colour Colotech+ GOLD	200	Extra Heavyweight	Extra Heavyweight (X-HW) A	-
Xerox Digital Colour Colotech+ GOLD	220	Extra Heavyweight	Extra Heavyweight (X-HW) A	-
Xerox Digital Colour Colotech+ GOLD	250	Extra Heavyweight	Extra Heavyweight (X-HW) A	-
Xerox Colotech+ Natural White	100	Bond	Plain F	-

Xerox Colotech+ Natural White	160	Heavyweight	Heavyweight (HW) A	-
Xerox Colotech+ Natural White	200	Extra Heavyweight	Extra Heavyweight (X-HW) A	-
200	180	Extra Heavyweight	Extra Heavyweight (X-HW) A	-
Xerox Colour Laser Matt CD labelsCombi Box (2-up)	-	Heavyweight	Heavyweight (HW) A	-
DL Envelope	-	Envelope		
Colotech+	90	Bond	Plain F	-
Colotech+	100	Bond	Plain F	-
Colotech+	120	Heavyweight	Heavyweight (HW) A	-
Colotech+	160	Heavyweight	Heavyweight (HW) A	-
Colotech+	200	Extra Heavyweight	Extra Heavyweight (X-HW) A	-
Colotech+	220	Extra Heavyweight	Extra Heavyweight (X-HW) A	-
Colotech+	250	Extra Heavyweight	Extra Heavyweight (X-HW) A	-
Xpress Paper	80	Plain	Plain D	-
DocuPaper Blue	80	Plain	Plain D	-
DocuPaper Blue	70	Plain	Plain A	-
J	82	Plain	Plain D	-
JD PAPER	98	Plain	Plain F	-
Diplomat Black	80	Plain	Plain D	-
Business Digital Carbon Neutral	85	Plain	Plain D	-

Green Wrap Pure 100 Carbon Neutral 100 Percent Recycled	80	Plain	Plain D	-
Green Wrap Australian Made 50 Percent Recycled	80	Plain	Plain D	-
Laserprint	80	Plain	Plain D	-
Van Hawk paper	70	Plain	Plain A	-
Van Hawk paper	80	Plain	Plain D	-
Horizon	70	Plain	Plain A	-
Horizon	80	Plain	Plain D	-
Office	70	Plain	Plain A	-
Office	80	Plain	Plain D	-
Recycled Supreme	80	Plain	Plain D	-
PAPER ONE All Purpose	80	Plain	Plain D	-
Express	80	Plain	Plain D	-
Nappco paper	80	Plain	Plain D	-
Reflex Carbon Neutral Ultra White	80	Plain	Plain D	-
Reflex Carbon Neutral Ultra White	90	Plain	Plain F	-
Reflex recycled	80	Plain	Plain D	-
Reflex Ultra White	80	Plain	Plain D	-
Double A	70	Plain	Plain A	-
Double A	80	Plain	Plain D	-
PaperOne Copier	70	Plain	Plain A	-

PaperOne Copier	75	Plain	Plain A	-
PaperOne Copier	80	Plain	Plain D	-
Xerox Undertones- Several Colours	80	Plain	Plain D	-
Copy Pilot	70	Plain	Plain A	-
Copy Pilot	80	Plain	Plain D	-
Kool Print	80	Plain	Plain D	-
Le Copy	70	Plain	Plain A	-
Le Copy	80	Plain	Plain D	-
Colotech+ Supergloss 1 Sided	160	Heavyweight	Heavyweight (HW) A	-
Colotech+ Supergloss	210	Extra Heavyweight	Extra Heavyweight (X-HW) A	-
Colotech+ Supergloss 1 Sided	250	Extra Heavyweight	Extra Heavyweight (X-HW) A	-
Colotech+ Gloss 2 Sided	120	Heavyweight	Heavyweight (HW) A	-
Colotech+ Gloss 2 Sided	140	Heavyweight	Heavyweight (HW) A	-
Colotech+ Gloss 2 Sided	170	Extra Heavyweight	Extra Heavyweight (X-HW) A	-
Colotech+ Gloss 2 Sided	210	Extra Heavyweight	Extra Heavyweight (X-HW) A	-
Colotech+ Gloss 2 Sided	250	Extra Heavyweight	Extra Heavyweight (X-HW) A	-
Colotech+ Silk 2 Sided	120	Heavyweight	Heavyweight (HW) A	-
Colotech+ Silk 2 Sided	140	Heavyweight	Heavyweight (HW) A	-
Colotech+ Silk 2 Sided	170	Extra Heavyweight	Extra Heavyweight (X-HW) A	-
Colotech+ Silk 2 Sided	210	Extra Heavyweight	Extra Heavyweight (X-HW) A	-

Colotech+ Silk 2 Sided	250	Extra Heavyweight	Extra Heavyweight (X-HW) A	-

*1 : Select the paper type setting for the paper loaded on a tray. For more information, refer to "Changing the Paper Settings" (P.72).

*2 : Most ideal image quality with the paper can be obtained by setting the image quality for each type of paper. For more information on the settings, refer to "Image Quality" (P.160).

Limited Paper

* : Most ideal image quality with the paper can be obtained by setting the image quality for each type of paper. For more information on the settings, refer to "Image Quality" (P.160).

You can use the following paper with limitations.

Important

- The paper performance may not be guaranteed depending on the manufacturer of the paper being used. For more information, contact our Customer Support Center.

Paper Name	BasisWeight(gsm)	Paper Type*1	Image Quality*2	Notes/Countermeasure
Xerox Digital Color Elite Silk Coated Text and Covers (C2S)	120	Gloss	Heavyweight (HW) A	Paper may be jammed in a humid condition. Fan the paper before loading. If paper jams still occur, feed one sheet at a time.
Xerox Digital Color Elite Silk Coated Text and Covers (C2S)	140	Gloss	Heavyweight (HW) A	
Xerox Digital Color Elite Silk Coated Text and Covers (C2S)	210	HW Gloss	Extra Heavyweight (X-HW) A	
Xerox Digital Color Elite Gloss Coated Text and Covers (C2S)	120	Gloss	Heavyweight (HW) A	
Xerox Digital Color Elite Gloss Coated Text and Covers (C2S)	140	Gloss	Heavyweight (HW) A	• Loading from Trays 1 to 4 is recommended. • Paper may be jammed in a humid condition. Fan the paper before loading. If paper jams still occur, feed one sheet at a time. If misfeeding still occurs, load paper curled upward. • Paper may be jammed when high density originals are printed to the Exit 2 tray. If the jam occured, use the center tray.

Xerox Digital Color Elite Gloss Coated Text and Covers (C2S)	210	HW Gloss	Extra Heavyweight (X-HW) A	
Xerox Digital Color Elite Gloss Coated Text and Covers (C2S)	120	Gloss	Heavyweight (HW) A	
Xerox Digital Color Select Gloss Coated Text and Covers (C2S)	210	HW Gloss	Extra Heavyweight (X-HW) A	
Xerox Digital Color Supreme Gloss (C1S)	160	Gloss	Heavyweight (HW) A	• Loading from Trays 1 to 4 is recommended. • Paper may be jammed in a humid condition. Fan the paper before loading. If paper jams still occur, feed one sheet at a time. If misfeeding still occurs, load paper curled upward. • Paper may be jammed when high density originals are printed to the Exit 2 tray. If the jam occured, use the center tray.
Xerox Digital Color Supreme Gloss	247	HW Gloss	Extra Heavyweight (X-HW) A	
Xerox Digital Color Trifold Brochures (C1S)	160	Gloss	Heavyweight (HW) A	
Xerox Digital Color Glossy Labels	-	Labels	-	• Loading from Trays 1 to 4 is recommended. • Paper may be jammed in a humid condition. Fan the paper before loading. If paper jams still occur, feed one sheet at a time.

Xerox Digital Color Matte Labels	-	Labels	-	• Labels once fed to the machine cannot be used. • Loading from Trays 1 to 4 is recommended. • Paper may be jammed in a humid condition. Fan the paper before loading. If paper jams still occur, feed one sheet at a time.
Xerox Laser Transp. - Removabl e Stripe	-	Labels	-	-
Phaser Profession al Transpare ncy	-	Labels	-	
Xerox Digital Colour Colotech+ Gloss Coated	120gsm	Gloss	Heavyweight (HW) A	Paper may be jammed in a humid condition. Fan the paper before loading. If paper jams still occur, feed one sheet at a time.
Xerox Digital Colour Colotech+ Gloss Coated	140gsm	Gloss	Heavyweight (HW) A	
Xerox Digital Colour Colotech+ Gloss Coated	170gsm	HW Gloss	Extra Heavyweight (X-HW) A	
Xerox Digital Colour Colotech+ Gloss Coated	210gsm	HW Gloss	Extra Heavyweight (X-HW) A	
Xerox Digital Colour Colotech+ Gloss Coated	250gsm	HW Gloss	Extra Heavyweight (X-HW) A	• Loading from Trays 1 to 4 is recommended. • Paper may be jammed in a humid condition. Fan the paper before loading. If paper jams still occur, feed one sheet at a time. If misfeeding still occurs, load paper curled upward.
Xerox Digital Colour Colotech+ Silk Coated	120gsm	Gloss	Heavyweight (HW) A	Paper may be jammed in a humid condition. Fan the paper before loading. If paper jams still occur, feed one sheet at a time.

Xerox Digital Colour Colotech+ Silk Coated	140gsm	Gloss	Heavyweight (HW) A	
Xerox Digital Colour Colotech+ Silk Coated	170gsm	Glossy Cardstock	Extra Heavyweight (X-HW) A	
Xerox Digital Colour Colotech+ Silk Coated	210gsm	HW Gloss	Extra Heavyweight (X-HW) A	
Xerox Digital Colour Colotech+ Silk Coated	250gsm	HW Gloss	Extra Heavyweight (X-HW) A	Paper may be jammed in a humid condition. Fan the paper before loading. If paper jams still occur, feed one sheet at a time to Tray 1 to 4(Tray 5 (Bypass) cannot be used for media heavier than 216 gsm).
Xerox Colotech+ Supergloss (Coated 1 side)	135gsm	Gloss	Heavyweight (HW) A	• Loading from Trays 1 to 4 is recommended. • Paper may be jammed in a humid condition. Fan the paper before loading. If paper jams still occur, feed one sheet at a time. If misfeeding still occurs, load paper curled upward. • Paper may be jammed when high density originals are printed to the Exit 2 tray. If the jam occured, use the center tray.
Xerox Colotech+ Supergloss (Coated 1 side)	135gsm	Gloss	Heavyweight (HW) A	• Loading from Trays 1 to 4 is recommended. • Paper may be jammed in a humid condition. Fan the paper before loading. If paper jams still occur, feed one sheet at a time. If misfeeding still occurs, load paper curled upward. • Paper may be jammed when high density originals are printed to the Exit 2 tray. If the jam occured, use the center tray.
Xerox Colotech+ Supergloss (Coated 1 side)	160gsm	Gloss	Heavyweight (HW) A	

Xerox Colotech+ Supergloss (Coated 1 side)	210gsm	HW Gloss	Extra Heavyweight (X-HW) A	
Xerox Colour Copier Laser Labels	-	Labels	-	• Labels once fed to the machine cannot be used. • Always use Tray 5.
Xerox Supergloss Labels	-	HW Gloss	-	• Always use Tray 1 to 4. • Paper may be jammed in a humid condition. Fan the paper before loading. If paper jams still occur, feed one sheet at a time. If misfeeding still occurs, load paper curled upward. • Paper may be jammed when high density originals are printed to the Exit 2 tray. If the jam occured, use the center tray.
Xerox Color Laser Dura Paper Label	-	Labels	-	Labels once fed to the machine cannot be used.
Xerox High Speed Removabl e Labels	-	Labels	-	• Labels once fed to the machine cannot be used. • Paper may be jammed in a humid condition. Fan the paper before loading. If paper jams still occur, feed one sheet at a time.
Xerox High Speed Removabl e Labels(A4)	-	Labels	-	
Xerox Plain Transpare ncy for Colour	-	Extra Heavyweight	-	-
Xerox Digital Color DocuPac Prsentatio n Folder High Gloss White	210 gsm	Labels	Extra Heavyweight (X-HW) A	• Loading from Trays 1 to 4 is recommended. • Paper may be jammed in a humid condition. Fan the paper before loading. If paper jams still occur, feed one sheet at a time. If misfeeding still occurs, load paper curled upward. • Paper may be jammed when high density originals are printed to the Exit 2 tray. If the jam occured, use the center tray.

Xerox Colour Laser Gloss CD labels	-	Labels	-	Paper may be jammed in a humid condition. Fan the paper before loading. If paper jams still occur, feed one sheet at a time. If misfeeding still occurs, load paper curled upward.
Xerox High Speed Laser Labels	-	Labels	-	Labels once fed to the machine cannot be used.
Xerox Labels White with Square	-	Labels	-	-
Xerox Laser Copier White Label	-	Labels	-	-
Xerox Laser Copier Label 24UP	-	Labels	-	-
LABELS MULTI-USE 14UP 99X38.1M	-	Labels	-	-

*1 : Select the paper type setting for the paper loaded on a tray. For more information, refer to "Changing the Paper Settings" (P.72).
*2 : Most ideal image quality with the paper can be obtained by setting the image quality for each type of paper. For more information on the settings, refer to "Image Quality" (P.160).

Unusable Paper

- Transparencies
- Damp or wet paper
- Paper pre-printed with other printer or copying machine
- Wrinkled, creased, or ripped paper
- Envelopes that are not flat, or that have clasps
- Envelopes with adhesive tape or glue, or that have windows
- Color paper with surface treatments
- Paper with rough surface, such as pulp paper or fibrous paper
- Symphony (Pastel Pink etc.) 80 gsm

Storing and Handling Paper

■ Please keep the following points in mind when storing paper

- Store paper inside a cabinet or other dry place. Paper that has absorbed moisture can result in paper jams and lower image quality.

- After opening a package of paper, wrap and store any remaining paper. We recommend that you store remaining paper in moisture prevention packets.
- Store paper on a flat surface to prevent bends or warping.
- Do not store unwrapped paper in high temperature and humid locations.

■ Please adhere to the following points when loading paper in a tray

- Align the stack of paper neatly before setting it in a tray.
- Do not use paper that is creased or wrinkled.
- Do not use warped or curled paper.
- Do not load paper of mixed sizes together into a tray.
- Carefully and labels before use. Otherwise, the paper may sticktogether, resulting in paper jams, or multiple sheets being fed to the machine simultaneously.

Loading Paper

This section describes how to load paper.

Types of paper loaded in trays

The machine automatically detects the size and orientation of loaded paper in a tray, but not a paper type. Normally, each tray is set to plain paper. When loading paper other than plain paper, you must change the paper type setting. You can name paper types and can set up to five paper types as user-defined paper.

Reference

- For information on changing the paper type settings, refer to "Changing the Paper Settings" (P.72).

Automatic Tray Selection

If you set paper source on the [Paper/Output] tab to [Paper Tray] in the PCL print driver's screen when printing, the machine automatically selects the paper tray according to the size and orientation of the document to be printed. This is called [Automatic Tray Selection].

When copying, selecting [Auto Select] for [Paper Supply] enables automatic tray selection. If the machine detects two or more corresponding trays for the automatic tray selection, the machine selects the tray with the highest priority specified in [Paper Type Priority] among the trays set under [Paper Type Settings]. Trays whose [Paper Type Priority] setting is set to [Auto Paper Off] are ignored in automatic tray selection. Also, if the [Paper Type Priority] settings are identical, the tray priority is determined by [Paper Tray Priority].

Note

- Some trays may not be selected in automatic tray selection depending on the setting of that tray for [Auto Paper Select]. For more information, refer to ""Change Settings" (P.158).
- Tray 5 cannot be selected in automatic tray selection.
- When the paper runs out during copying or printing, select a tray containing the same sized paper and orientation, and the machine continues copying or printing (Auto Tray Switching feature). The machine cannot switch to a tray containing a paper type for which [Paper Type Priority] is set to [Auto Paper Off].

Reference

- For information about [Paper Type], [Paper Type Priority], and [Paper Tray Priority] settings, and the paper substitute feature, refer to "Paper Tray Settings" (P.157). You can also set these settings from CentreWare Internet Services.

Adding paper

When the machine runs out of paper during copying or printing, a message is displayed on the touch screen. Add paper according to the message instructions. Copying or printing automatically resumes when paper is added.

Note

- Fan the paper well before loading paper in a tray. It prevents paper from sticking to each other and reduces paper jams.

Loading Paper in Trays 1 to 4

The following describes the procedures to load paper in Trays 1 to 4.

When the machine runs out of paper during copying or printing, a message appears on the touch screen. Add paper according to the message instructions. Copying or printing automatically resumes when paper is added.

Important

- The user documentations may be placed in a tray when the machine is first installed. In the case, be sure to remove the user documentations from the tray. Otherwise, it may cause paper jams or machine malfunction.
- Do not place any objects other than paper in the trays.

Note

- Trays 2 to 4are optional for some models.
- Carefully fan paper before loading it in a tray. Otherwise, the paper may stick together, resulting in paper jams.

For information on changing the paper size and orientation, refer to "Changing the Paper Size for Trays 1 to 4" (P.70).

1 Pull out the tray until it stops.

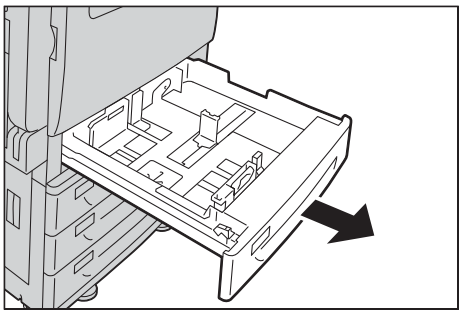

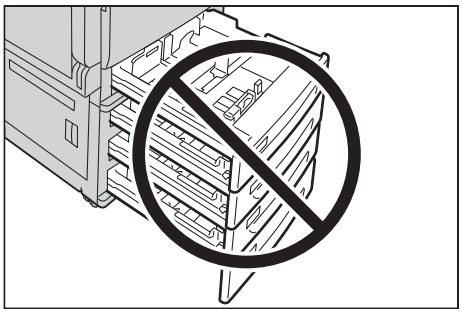

Important

- While the machine is processing a job, do not pull out the tray that is being used for a job.
- To prevent paper jams or erroneous detection of loaded paper in a tray by the machine, do not add paper on top of any remaining paper in the tray. Remove any remaining paper in the tray, and then load that paper on top of the newly loaded paper.
- Do not pull out all the trays together. Otherwise, the machine gets inclined and turns over, which may cause injuries.

2 Load and align the edge of the paper against the left edge of the tray, with the side to be copied or printed on facing up.

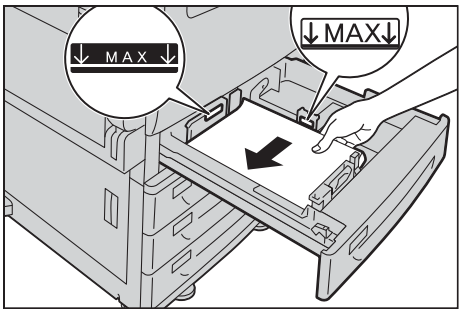

Note

- Do not load paper above the maximum fill line ("MAX" in the right figure). It may cause paper jams or machine malfunction.
- Do not place any paper or objects in the empty space on the right side of Trays 1 to 4. It may cause paper jams or machine malfunction.

3 Push the tray in gently until it stops.

Important

- When inserting the tray, push it gently. Forcibly pushing in the tray may cause machine malfunction.

Loading Paper in Tray 5 (Bypass)

When printing or copying on a size or type of paper that cannot be set in Trays 1 to 4, use Tray 5. The following describes the procedures to load paper in Tray 5. For printings, specify the instructions using the [Paper/Output] tab in the print driver. Also specify the type of paper to be loaded.

1 Open the Tray 5 (Bypass).

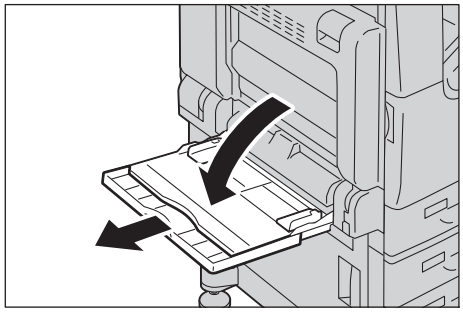

Note

- If necessary, pull out the extension tray. The extension tray can be extended in two stages. Pull out the extension tray gently.

2 Load paper with the side to be copied or printed on facing down, inserting the paper until its edge lightly touches against the paper feed entrance.

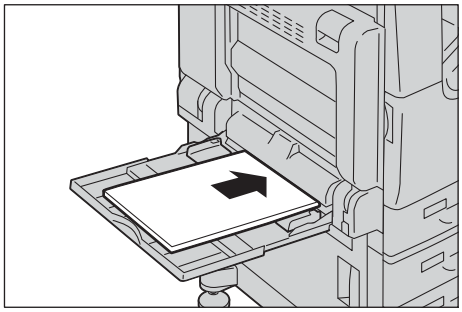

Important

- Do not load mixed paper types into the tray.
- Do not load paper above the maximum fill line. It may cause paper jams or machine malfunction.
- When making copies or prints on thick-stock paper and the paper will not feed into the machine, apply a curl to the paper as shown in the figure on the right. Note, however, that excessively bending or folding the paper may cause paper jams.
- Depending on the type of the heavyweight paper, paper may not be fed to the machine or image quality may deteriorate.

3 Adjust the paper guides to align the edges of the paper loaded.

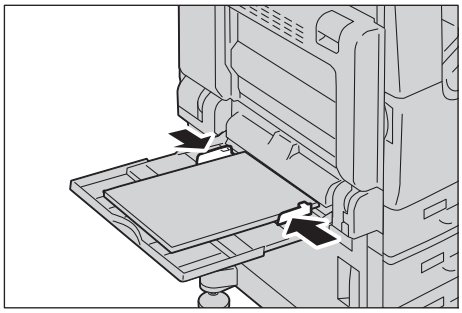

Changing the Paper Size

This section describes how to change the paper size for Trays 1 to 4.

Changing the Paper Size for Trays 1 to 4

The following describes how to change paper size in Trays 1 to 4.

Note

- Trays 2 to 4 are optional for some models.
- The types of paper in Trays 1 to 4 are preset. There are 11 paper types: Plain paper, Bond paper, Recycled paper, Heavyweight paper, Gloss paper, Labels, Custom paper 1 to 5, and normally, plain paper is set. When changing to a different paper type, change the paper quality settings to match the type of paper to be loaded so that you can maintain high quality printing. For more information on paper type settings, refer to "Changing the Paper Settings" (P.72).
- When loading non-standard size paper, you must register the paper size. For information on registering paper sizes, refer to "Paper Tray Attributes" (P.158).

Reference

- For more information on how to copy on non-standard size paper, refer to "3 Copy" > "Copy" > "Paper Supply (Selecting the Paper for Copying)" in the User Guide. For more information on how to print on non-standard size paper, refer to the help of the print driver.

1 Pull out the tray until it stops.

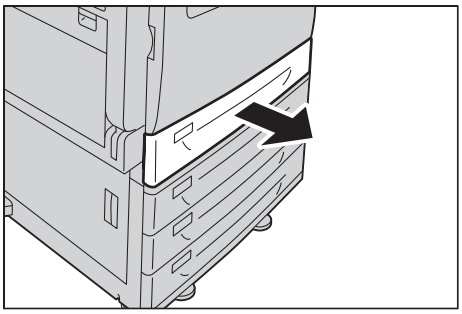

⚠CAUTION

- **When pulling out the paper tray, do it slowly. If pulled out with too much force, the tray can hit and injure your knees.**

Important

- While the machine is processing a job, do not pull out the tray that is being used for a job.
- To prevent paper jams or erroneous detection of loaded paper in a tray by the machine, do not add paper on top of any remaining paper in the tray.

2 Remove any paper loaded in the tray.

3 While pinching the two paper guides, move them to the positions for the paper size you are loading.

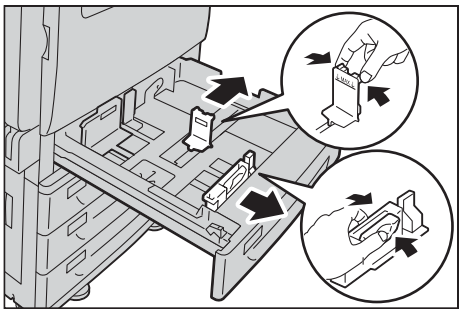

4 Load and align the edge of the paper against the left edge of the tray with the side to be copied or printed on facing down.

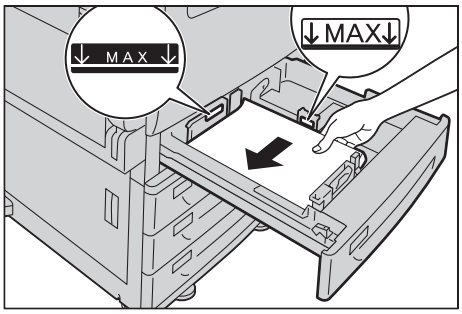

Important

- Do not load paper above the maximum fill line.

5 Push the tray in gently until it stops.

Important

- When inserting the tray, push it gently. Forcibly pushing in the tray may cause machine malfunction.

Note

- Affix the paper size label to the front of the paper tray.

Reference

- For more information on paper type settings, refer to "Changing the Paper Settings" (P.72).

Changing the Paper Settings

This section describes how to change the paper type for Trays and how to set image quality processing by the individual paper type.

After loading paper in a tray, specify the type of paper loaded and select image quality for the paper type. Setting Image quality for each paper type enables you to print with the most suitable image quality for the paper type.

Reference

- For information on image quality processing for each paper type, refer to "Image Quality" (P.160).

Note

- Users can name Custom 1 to Custom 5 displayed in the paper type settings. For information on how to set names to Custom 1 to Custom 5, refer to "Custom Paper Name/Color" (P.157).
- You can change the paper type setting without entering to the System Administration mode on the [Setup] screen, which is displayed by selecting [Setup] in the Services Home screen if you configure the settings in advance. For more information, refer to "Customize Paper Supply Screen" (P.158).

1 Press the <Log In/Out> button.

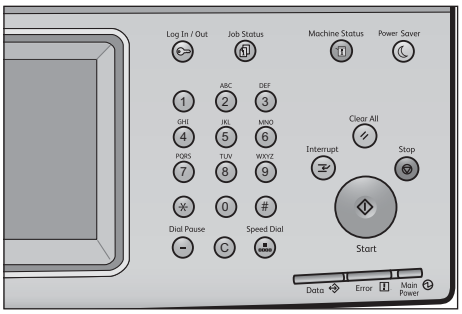

2 Enter the system administrator's user ID with the numeric keypad or the keyboard displayed on the screen, and select [Enter].

When a passcode is required, select [Next] and enter the system administrator's passcode, and select [Enter].

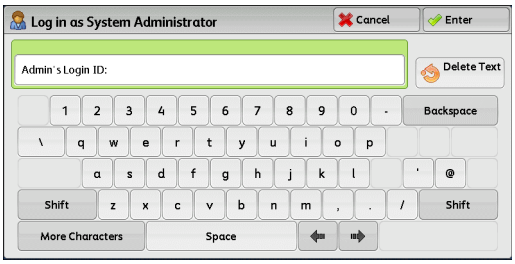

Note

- The default user ID is "11111".

  The default passcode is "x-admin".

3 Select [Tools] on the Services Home screen.

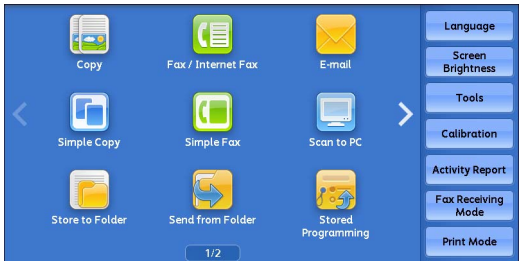

Note

- When the Services Home screen is not displayed on the touch screen, press the <Services Home> button.

4 Select [System Settings] > [Common Service Settings] > [Paper Tray Settings].

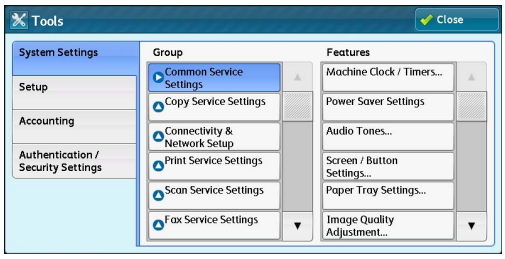

5 Select [Paper Tray Attributes].

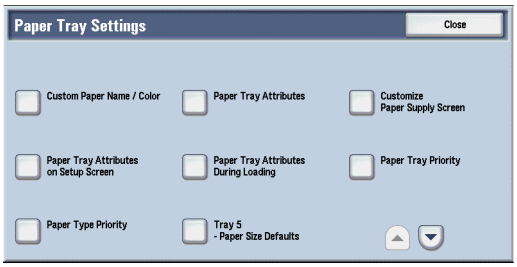

6 Select a paper tray for changing the paper type setting under [Items].

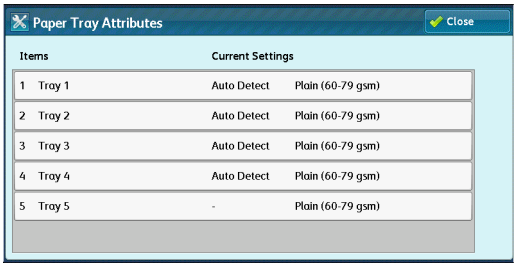

7 Select [Change Settings].

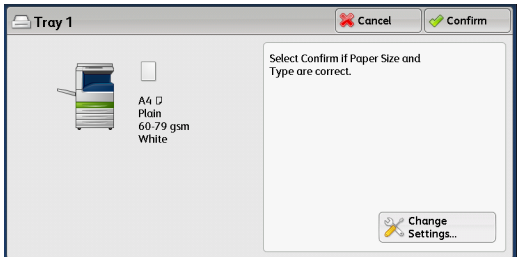

8 Set [Paper Type], [Paper Size], [Paper Color], and [Auto Paper Select] respectively.

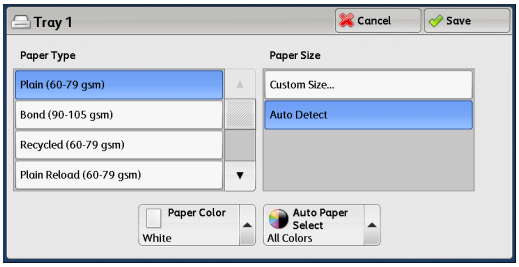

9 Select [Cancel], [Save], [Confirm], or [Close] repeatedly until the [Paper Tray Settings] screen is displayed.

10 Select [Image Quality].

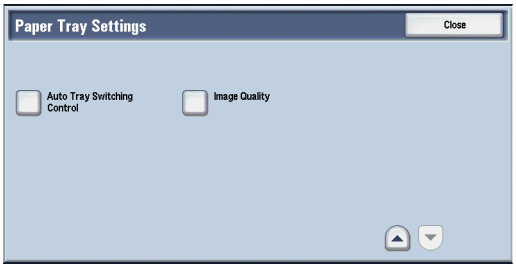

Note

- Select[▲]to display the previous screen or[▼]to display the next screen.

11 Select the paper type for changing the image quality settings under [Items], and then select [Change Settings].

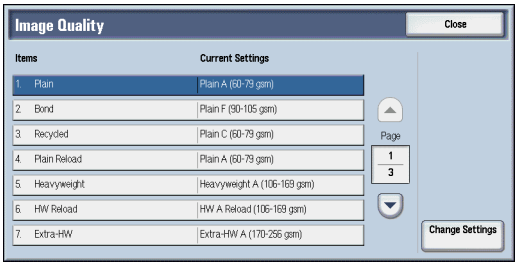

Note

- Select[▲]to display the previous screen or[▼]to display the next screen.

12 Select the image quality, and then select [Save].

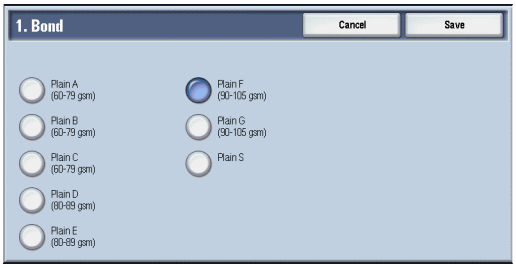

13 Select [Close] repeatedly until the [Tools] screen is displayed.

14 Select [Close].

3

Maintenance

Replacing Consumables

The machine is provided with the following consumables and periodic replacement parts. We recommend the use of the following consumables as they are manufactured to meet the specifications of the machine.

Type of Consumables/Periodic Replacement Parts	Product Code	Quantity/Box
Toner cartridge K (Black) (for TSC (Total Service Contract) or FSMA (Full Service Maintenance Agreement))	CT202488	1 unit/box
Toner cartridge C (Cyan) (for TSC or FSMA)	CT202489	1 unit/box
Toner cartridge M (Magenta) (for TSC or FSMA)	CT202490	1 unit/box
Toner cartridge Y (Yellow) (for TSC or FSMA)	CT202491	1 unit/box
Toner cartridge K (Black) (for T&M (Time and Material contract))	CT202496	1 unit/box
Toner cartridge C (Cyan) (for T&M)	CT202497	1 unit/box
Toner cartridge M (Magenta) (for T&M)	CT202498	1 unit/box
Toner cartridge Y (Yellow) (for T&M)	CT202499	1 unit/box
Drum cartridge	CT351088	1 unit/box
Waste toner container	CWAA0885	1 unit/box
Staple cartridge (Finisher-A1/B1)*1	CWAA0856	5,000 staples X 2 sets/box
Staple cartridge (Booklet Maker Unit for Finisher-B1)*2	CWAA0728	2,000 staples X 4 sets/box
Stamp Replacement Kit	F451	-

*1 : For Finisher-A1 and Finisher-B1
*2 : For Booklet Maker Unit for Finisher-B1

Note

- We recommend that you always keep spare consumables/periodic replacement parts available.

⚠WARNING

- **Never use a vacuum cleaner for spilled toner and residual toner in this product, toner cartridge or toner bottle. It may catch fire by electric sparks inside a vacuum cleaner and cause explosion. Use a broom or a wet cloth to wipe off the spills. If you spill a large volume of toner, contact your local Fuji Xerox representative.**
- **Never throw a toner cartridge into an open flame. Remaining toner in the cartridge may catch fire and cause burn injuries or explosion. If you have a used toner cartridge no longer needed, contact your local Fuji Xerox representative for its disposal.**
- **Never throw a waste toner bottle into an open flame. Toner may catch fire and cause burn injuries or explosion. If you have a used waste toner bottle no longer needed, contact your local Fuji Xerox representative for its disposal.**

⚠CAUTION

- **Keep drum cartridges and toner cartridges out of the reach of children. If a child accidentally swallows toner, spit it out, rinse mouth with water, drink water and consult a physician immediately.**
- **When replacing drum cartridges and toner cartridges, be careful not to spill the toner. In case of any toner spills, avoid contact with clothes, skin, eyes and mouthas well as inhalation.**
- **If toner spills onto your skin or clothing, wash it off with soap and water. If you get toner particles in the eyes, wash it out with plenty of water for at least 15 minutes until irritation is gone. Consult a physician if necessary. If you inhale toner particles, move to a fresh air location and rinse your mouth with water. If you swallow toner, spit it out, rinse your mouth with water, drink plenty of water and consult a physician immediately.**

Handling consumables/periodic replacement parts

- Do not store boxes of consumables/periodic replacement parts upright.
- Do not unpack consumables/periodic replacement parts before use. Avoid storing consumables/periodic replacement parts in the following locations:
  - In high temperature and humid locations
  - Near heat-generating devices
  - Areas exposed to direct sunlight
  - Dusty areas
- When using consumables/periodic replacement parts, carefully read precautions for use. Precautions for use are instructed on their bodies or packages, or a precaution sheet is included in their packages.
- We recommend always keeping spare consumables/periodic replacement parts in stock.
- When calling our Customer Support Center to order consumables/periodical replacement parts, have the product codes ready.
- The use of consumables/periodic replacement parts not recommended by Fuji Xerox could impair machine quality and performance. Use only consumables/periodic replacement parts recommended by Fuji Xerox.

Checking the status of consumables

You can check the status of consumables on the [Supplies] screen.

Reference

- For information on consumables, refer to "Supplies" (P.133).

The following shows the reference section for each item.

"Replacing Toner Cartridge" (P.80)

"Replacing Waste Toner Container (R5)" (P.82)

"Replacing Drum Cartridges R1, R2, R3, or R4" (P.87)

"Replacing Staple Cartridge (for Finisher-A1)" (P.88)

"Replacing Staple Cartridge (for Booklet Maker Unit for Finisher-B1)" (P.92)

"Emptying Punch Waste Container (for Finisher-B1)" (P.93)

"Replacing Stamp" (P.94)

Replacing Toner Cartridge

The following messages are displayed on the touch screen depending on the amount of toner remaining. Replace the toner cartridge according to the message.

Message*1	Remaining Page Yield*2	Solution
Please order a Yellow Toner [Y] Cartridge.	Black: Approx. 3,000 pagesOther than Black: Approx. 2,500 pages	You do not need to replace the Toner Cartridge immediately. Order the Toner Cartridge displayed on the screen.
Yellow Toner [Y] Cartridge needs to be replaced soon.	Approx. 40 pages	Replace the toner cartridge with a new one.
Yellow Toner [Y] Cartridge needs to be replaced.	-	The machine will stop. Replace the toner cartridge with a new one.

*1 : The messages in the above table apply to Yellow Toner. "Yellow Toner [Y]" shown in the messages vary depending on the color and number of the applicable toner.

*2 : The remaining page yield for copy/print jobs is applicable when A4 paper LEF ( ) is used. The value is an estimate and varies depending on the conditions such as the content printed, dot coverage (area coverage), paper size, paper type, copy/print density, output image type, and the machine operating environment.

⚠WARNING

- **Never use a vacuum cleaner for spilled toner and residual toner in this product, toner cartridge or toner bottle. It may catch fire by electric sparks inside a vacuum cleaner and cause explosion. Use a broom or a wet cloth to wipe off the spills. If you spill a large volume of toner, contact your local Fuji Xerox representative.**
- **Never throw a toner cartridge into an open flame. Remaining toner in the cartridge may catch fire and cause burn injuries or explosion. If you have a used toner cartridge no longer needed, contact your local Fuji Xerox representative for its disposal.**

Important

- When you replace a toner cartridge, toner may spill and soil the floor. We recommend laying paper on the floor beforehand.
- The use of toner cartridges not recommended by Fuji Xerox may degrade image quality and performance. Use only toner cartridges recommended by Fuji Xerox.
- When the remaining amount of toner is low, the machine may stop printing and display a message. If this occurs, replace the toner cartridge to resume copying or printing.
- Replace toner cartridge while the machine is on.
- Copy or print density may decrease slightly after the message "Please order XXX" appears on the touch screen.
- When the machine is in the Power Saver mode, exit the Power Saver mode by pressing the <Power Saver> button and the <Machine Status> button on the control panel before you replace the waste toner container.
- When replacing the toner cartridge, press the <Machine Status> button and check the current status for the toner cartridge even when the control panel is lit.
- If a partially used toner cartridge is used, a message appears and the number of pages that you can copy or print displayed on the screen may differ considerably.

1 Make sure that the machine is not operating, and open the front cover.

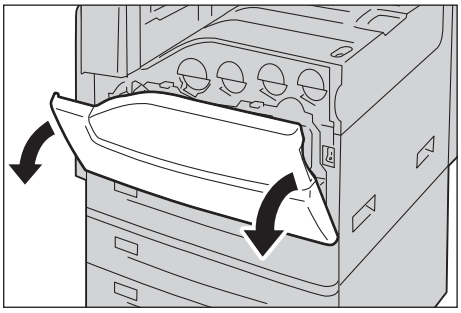

2 Put your hand under the dent of the toner cartridge indicated in the message, and slightly lift up the cartridge.

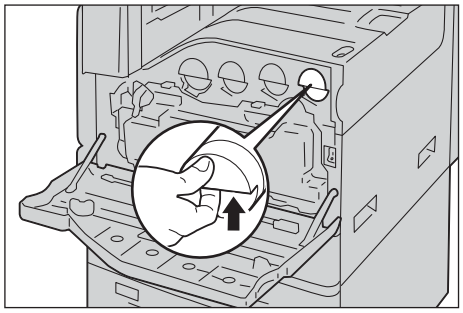

Note

- "Y", "M", "C", or "K" indicates Yellow, Magenta, Cyan, and Black, respectively.

3 Pull out the toner cartridge slowly, and slide it out.

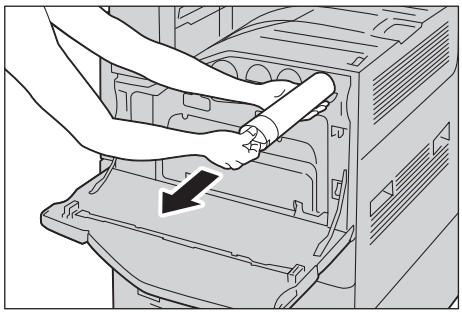

Important

- Slide out the toner cartridge gently. Otherwise, toner may spill from the cartridge.
- If you have a used toner cartridge no longer needed, contact our Customer Support Center for its disposal.

4 Take the new toner cartridge of the same color out of the box, and shake the cartridge up and down and left and right for ten times.

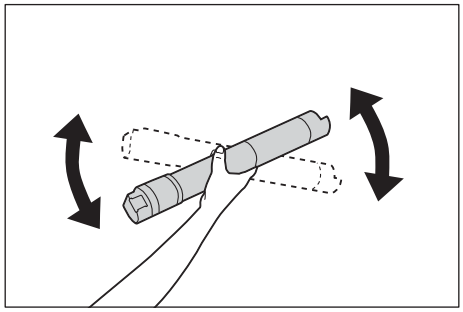

5 Hold the cartridge with the arrow facing up, and push the cartridge in slowly until it stops.

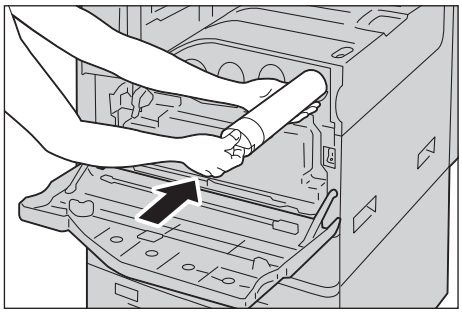

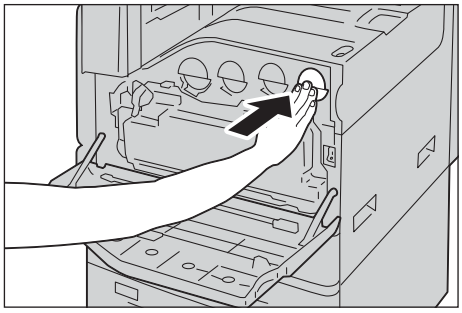

6 Close the front cover.

Note

- If the front cover is not completely closed, a message will appear and the machine will remain paused.

Replacing Waste Toner Container (R5)

The waste toner container holds used toner. The following messages are displayed on the touch screen according to the status of the waste toner container. Follow the messages.

Message	Remaining Page Yield*	Solution
Please order a Waste Toner Container.	• DocuCentre-V C2265 Approx. 1,200 pages • DocuCentre-V C2263 Approx. 1,000 pages	Order the waste toner container.
The Waste Toner Container needs to be replaced.	-	The machine will stop. Replace the wastetoner container with a new one.

* : The remaining page yield for copy/print jobs is applicable when A4 paper LEF (▯) is used. The value is an estimate and varies depending on the conditions such as the content printed, dot coverage (area coverage), paper size, paper type, copy/print density, output image type, and the machine operating environment.

When replacing the waste toner container, clean the LED printheads located behind the waste toner container by using the cleaning bar supplied with a new waste toner container to prevent inconsistencies in density or color in copies and prints.

⚠WARNING

- **Never use a vacuum cleaner for spilled toner and residual toner in this product, toner cartridge or toner bottle. It may catch fire by electric sparks inside a vacuum cleaner and cause explosion. Use a broom or a wet cloth to wipe off the spills. If you spill a large volume of toner, contact your local Fuji Xerox representative.**
- **Never throw a waste toner bottle into an open flame. Toner may catch fire and cause burn injuries or explosion. If you have a used waste toner bottle no longer needed, contact your local Fuji Xerox representative for its disposal.**

Important

- Do not touch the five gray-colored sponge parts on the back side of the waste toner container. Otherwise, your hands may get dirty with toner.
- When you replace the waste toner container, toner may spill and soil the floor. We recommend laying paper on the floor beforehand.
- The proper disposal of used waste toner containers is required. Return the old waste toner container to our Customer Support Center.
- The use of waste toner container not recommended by Fuji Xerox may impair quality and performance. Use only waste toner container recommended by Fuji Xerox for the machine.
- When the machine is in the Power Saver mode, exit the Power Saver mode by pressing the <Power Saver> button and the <Machine Status> button on the control panel before you replace the waste toner container.
- When replacing the waste toner container, press the <Machine Status> button and check the current status for the waste toner container even when the control panel is lit.

1 Make sure that the machine is not operating, and open the front cover.

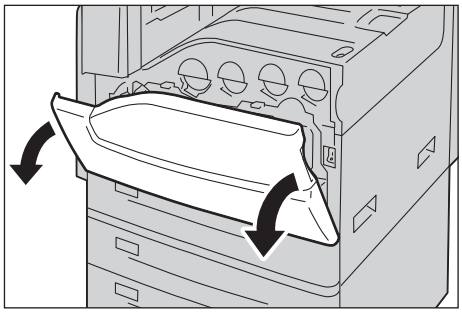

2 Turn the lock lever counterclockwise to unlock the waste toner container. While holding down the tabs on the top of the waste toner container, lay the container down toward you and then pull out the container upward at an angle.

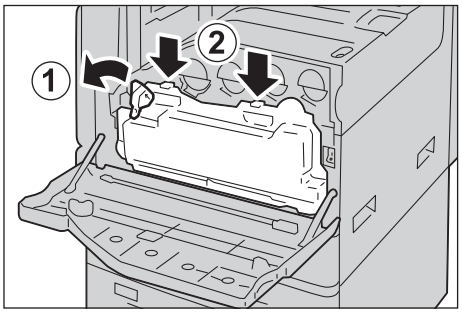

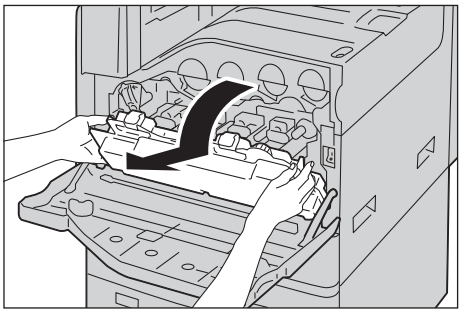

Note

- After removing the waste toner container from the machine, do not turn the container upside down. Otherwise, toner may spill.

3 Prepare a new waste toner container and cleaning bar.

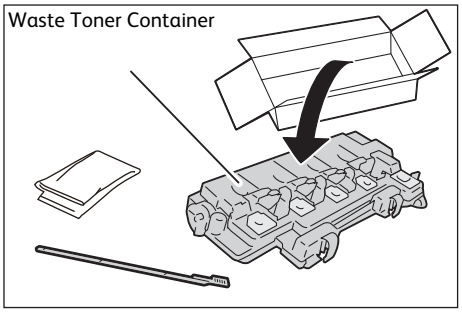

Note

- Take a new container and cleaning bar out of the box in advance.

4 Clean each of the LED printheads once with the cleaning bar on the back side of the front cover. Insert the cleaning bar into each slot until it stops, and then slowly slide the bar back out.

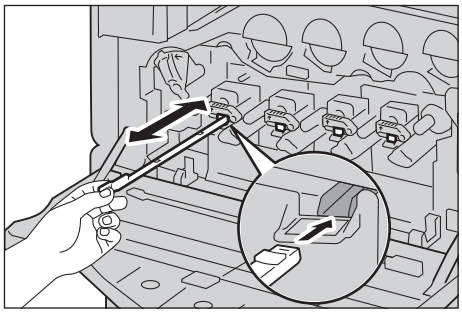

5 After cleaning the LED printheads, attach the new cleaning bar to the back side of the front cover.

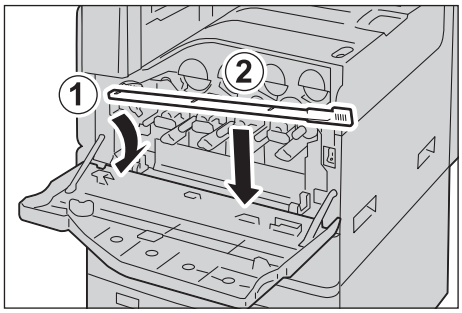

Important

- When inserting the waste toner container, do not grip the handle of the container.

6 Align the dents at the bottom of the waste toner container with the tabs on the machine.

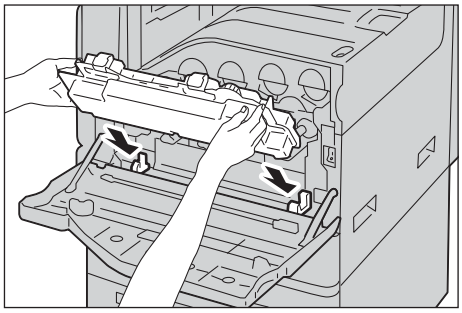

7 Raise the waste toner container toward the inside of the machine until it clicks into place, and then turn the lock lever clockwise to lock the waste toner container.

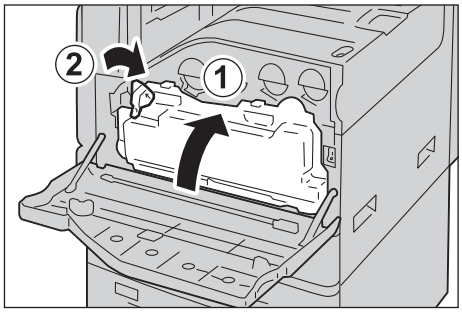

8 Insert the used waste toner container into the supplied plastic bag.

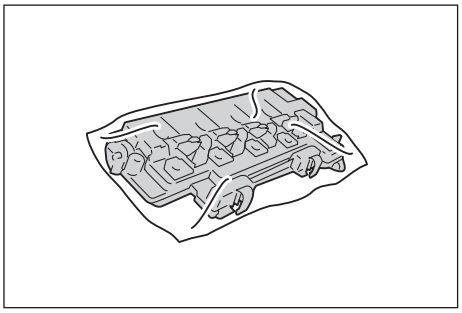

9 Use both hands to carefully place the used waste toner container into the empty box. Place also the old cleaning bar in the box.

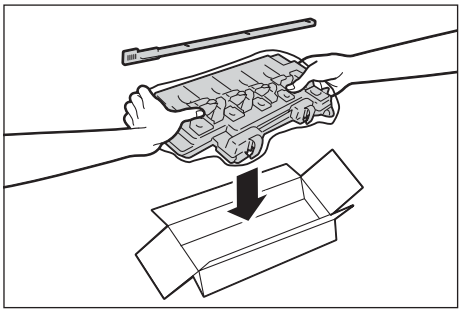

Note

- Return the old waste toner container to our Customer Support Center.

10 Close the front cover.

Note

- If the front cover is not completely closed, a message will appear and the machine will remain paused.

Replacing Drum Cartridges R1, R2, R3, or R4

Important

- When replacing the drum cartridge, refer to replacement instructions provided with each new consumable box.

The machine displays the following messages when a drum cartridge needs to be replaced. When the message is displayed, contact our Customer Support Center.

If you continue to copy or print without replacing the drum cartridge after the message is displayed on the touch screen, the machine will stop after copying or printing the number of pages shown in the following table.

Message	Remaining Page Yield	Solution
Please order a Drum Cartridge RX.	• DocuCentre-V C2265 Approx. 2,000 pages • DocuCentre-V C2263 Approx. 3,000 pages	You do not need to replace the Drum Cartridge immediately. Order the Drum Cartridge displayed on the screen.
Drum Cartridge needs to be replaced.	-	Replace the drum cartridge with a new one.

⚠CAUTION

- **When replacing drum cartridges and toner cartridges, be careful not to spill the toner. In case of any toner spills, avoid contact with clothes, skin, eyes and mouth as well as inhalation.**
- **If toner spills onto your skin or clothing, wash it off with soap and water. If you get toner particles in your eyes, wash it out with plenty of water for at least 15 minutes until irritation is gone. Consult a physician if necessary. If you inhale toner particles, move to a fresh air location and rinse your mouth with water. If you swallow toner, spit it out, rinse your mouth with water, drink plenty of water and consult a physician immediately.**
- **Keep drum cartridges and toner cartridges out of the reach of children. If a child accidentally swallows toner, spit it out, rinse mouth with water, drink water and consult a physician immediately.**

Important

- The use of drum cartridges not recommended by Fuji Xerox may degrade image quality and performance. Use only drum cartridges recommended by Fuji Xerox.
- When the machine is in the Power Saver mode, exit the Power Saver mode by pressing the <Power Saver> button and the <Machine Status> button on the control panel before you replace the drum cartridge.
- When replacing the drum cartridge, press the <Machine Status> button and check the current status for the drum cartridge even when the control panel is lit.

Note

- Do not expose drum cartridges to direct sunlight or strong light from indoor fluorescent lighting. Do not touch or scratch the surface of the drum. Doing so may result in unsatisfactory printing.
- When storing drum cartridges, do not leave them unpacked before use. The drum cartridges may be deteriorated when exposed to light
- The remaining page yield is applicable when A4 paper LEF (▯) is used. The value is an estimate and varies depending on the conditions such as the paper size, the paper orientation, the number of pages continuously print, and the machine operating environment.
- Replace the drum cartridge while the machine is switched on. If the power is switched off, all information stored to the machine's memory will be erased.
- Images output from the machine may get dirty after the message "Please order a Drum Cartridge XXX RX"

appears on the touch screen.

Replacing Staple Cartridge (for Finisher-A1)

When the optional Finisher-A1 is installed and the staple cartridge needs to be replaced, a message appears on the touch screen. When this message appears, load a new staple case into the staple cartridge.

Important

- The use of staple cartridges not recommended by Fuji Xerox may degrade quality and performance. Use only staple cartridges recommended by Fuji Xerox.
- When the machine is in the Power Saver mode, exit the Power Saver mode by pressing the <Power Saver> button and the <Machine Status> button on the control panel before you replace the staple cartridge.
- When replacing the staple cartridge, press the <Machine Status> button and check the current status for the staple cartridge even when the control panel is lit.

Note

- To order a staple cartridge, contact our Customer Support Center.

1 Make sure that the machine is not operating, and open the finisher front door.

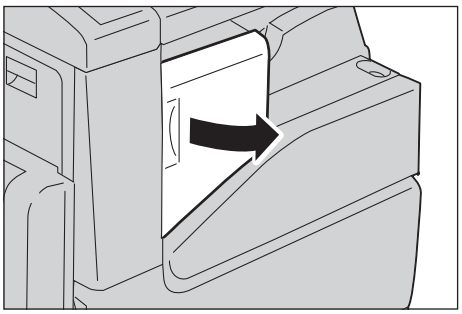

2 Take the staple cartridge out of the finisher.

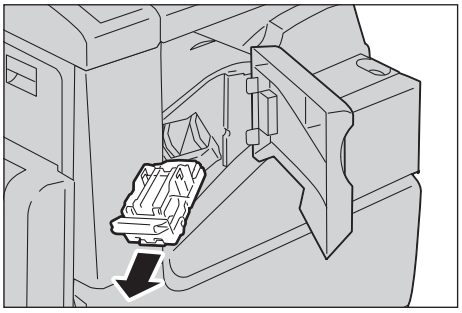

3 After you take out the staple cartridge, check inside of the finisher for any remaining staples.

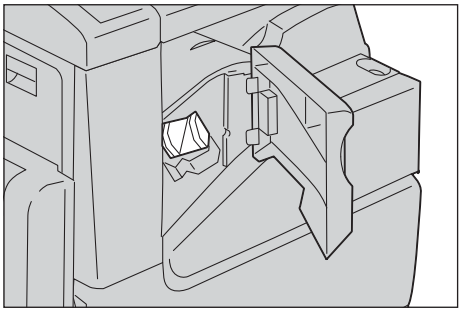

4 Pinch both sides of the empty staple case with your fingers (1), and remove the staple case from the cartridge (2).

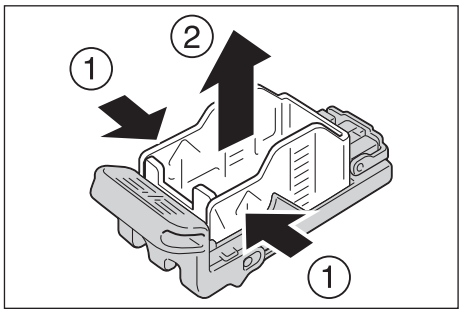

5 Insert the front side of the new staple case into the staple cartridge (1), and then push the rear side into the cartridge (2).

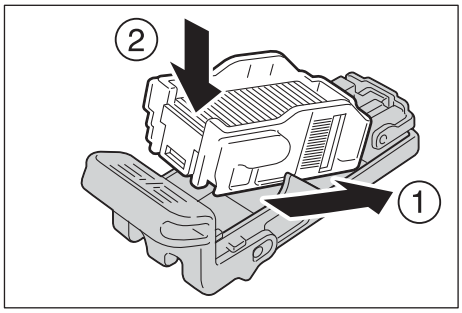

6 Push the staple cartridge into the finisher until it clicks into place.

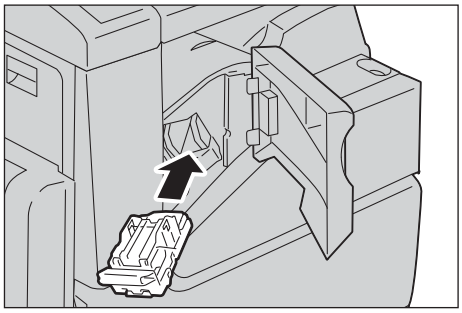

7 Close the finisher front cover.

Note

- If the front cover is not completely closed, a message will appear and the machine will remain paused.

Replacing Staple Cartridge (for Finisher-B1)

When the optional Finisher-B1 is installed and the staple cartridge needs to be replaced, a message appears on the touch screen. When this message appears, load a new staple case into the staple cartridge.

Important

- The use of staple cartridges not recommended by Fuji Xerox may degrade quality and performance. Use only staple cartridges recommended by Fuji Xerox.
- When the machine is in Power Saver mode, exit Power Saver mode by pressing the <Power Server> button and the <Machine Status> button on the control panel before you replace the staple cartridge.
- When replacing the staple cartridge, press the <Machine Status> button and check the current status for the staple cartridge even when the control panel is lit.

Note

- To order a staple cartridge, contact our Customer Support Center.

1 Make sure that the machine is not operating, and open the finisher front cover.

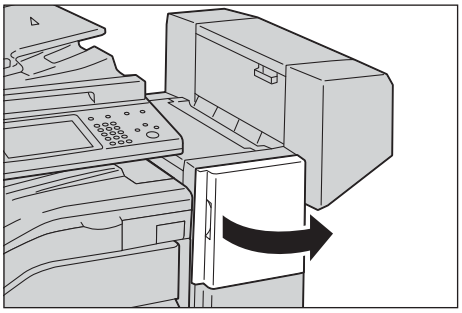

2 Grasp the handle and pull out the staple cartridge holder to the right, towards you.

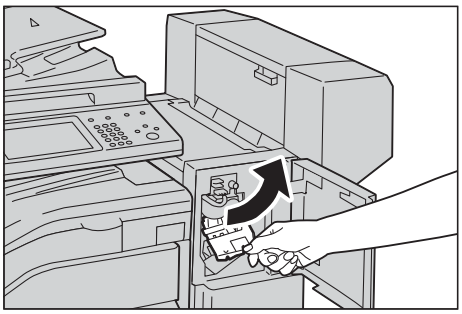

3 Take the staple cartridge out of the finisher.

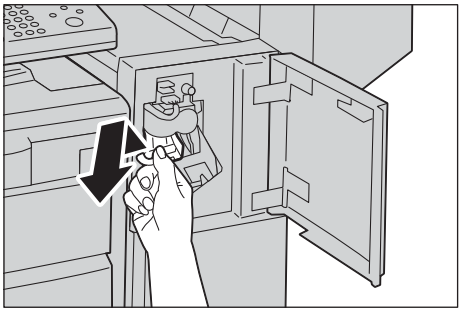

Note

- The staple cartridge is firmly inserted. A slight force is required to pull the cartridge out of the finisher.

4 Pinch both sides of the empty staple case with your fingers (1), and remove the staple case from the cartridge (2).

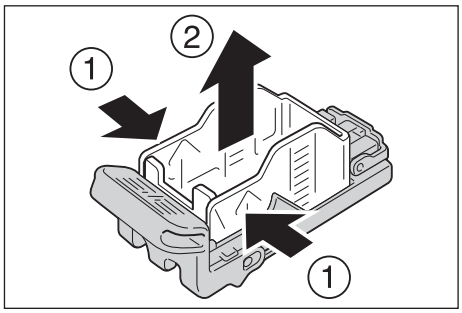

5 Insert the front side of the new staple case into the staple cartridge (1), and then push the rear side into the cartridge (2).

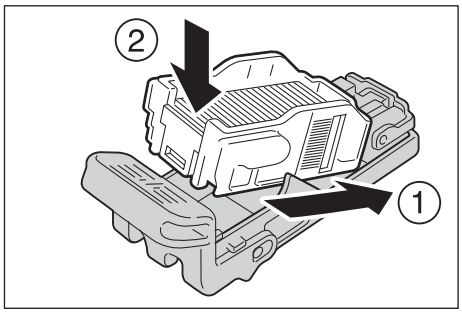

6 Push the staple cartridge into the finisher until it clicks into place.

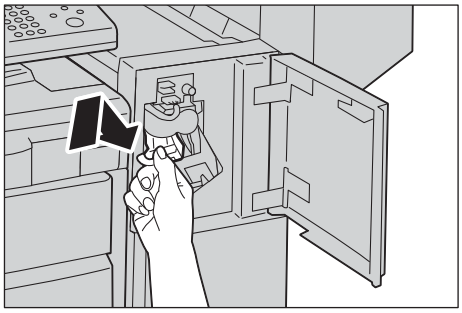

7 Close the finisher front cover.

Note

- If the finisher front cover is not completely closed, a message will appear and the machine will remain paused.

Replacing Staple Cartridge (for Booklet Maker Unit for Finisher-B1)

When the optional Booklet Maker Unit for Finisher-B1 is installed and the staple cartridge needs to be replaced, a message appears on the touch screen. When this message appears, load a new staple case into the staple cartridge.

Important

- The use of staple cartridges not recommended by Fuji Xerox may degrade quality and performance. Use only staple cartridges recommended by Fuji Xerox.
- When the machine is in the Power Saver mode, exit the Power Saver mode by pressing the <Power Saver> button and the <Machine Status> button on the control panel before you replace the waste toner container.
- When replacing the staple cartridge, press the <Machine Status> button and check the current status for the staple cartridge even when the control panel is lit.

Note

- To order a staple cartridge, contact our Customer Support Center.

1 Make sure that the machine is not operating, and open the finisher side cover.

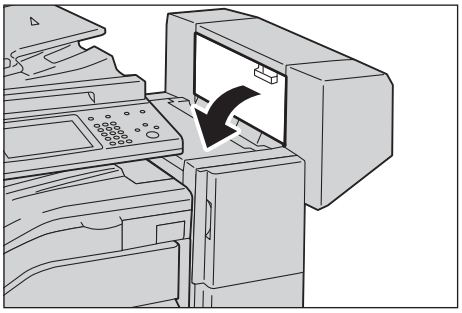

2 Hold the tabs on both sides of the staple cartridge and pull the cartridge out of the finisher.

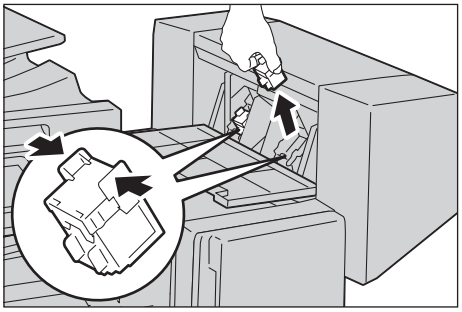

3 Hold the tabs on both sides of a new staple cartridge, and insert it into the original position until it clicks.

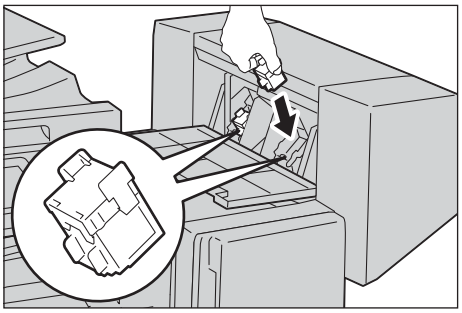

4 Repeat steps 2 and 3 to replace the other staple cartridge.

5 Close the finisher side cover.

Note

- If the cover is not completely closed, a message will appear and the machine remains paused.

Emptying Punch Waste Container (for Finisher-B1)

When the optional Finisher-B1 is installed and the hole punch waste container becomes full, a message appears on the touch screen. When the message appears, empty the hole punch waste container as instructed.

Make sure to discard all paper chads when emptying the hole punch waste container. Not doing so will cause the container to fill up before the message telling you to empty the container appears again, and this can cause machine malfunction.

Important

- Empty the hole punch waste container when the machine is on. If you empty the container while the machine is off, the machine does not recognize that the container has been emptied.
- When the machine is in the Power Saver mode, exit the Power Saver mode by pressing the <Power Saver> button and the <Machine Status> button on the control panel before you replace the waste toner container.
- When replacing the punch waste container, press the <Machine Status> button and check the current status for the hole punch waste container even when the control panel is lit.

1 Make sure that the machine is not operating, lift the top transport cover, and then open the front transport cover of the finisher.

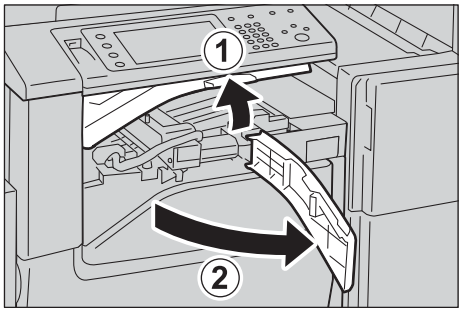

2 Pull out the hole punch waste container.

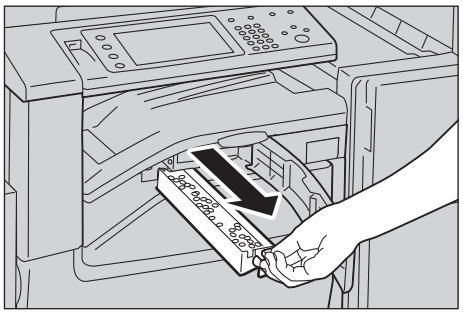

3 Empty the container.

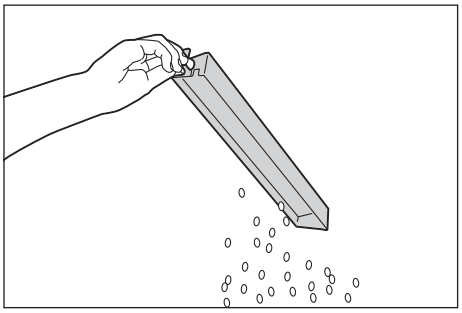

4 Insert the emptied hole punch waste container into the finisher until it stops.

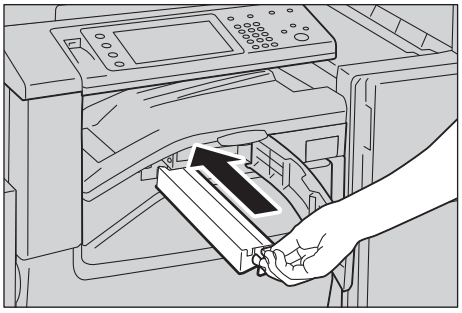

5 Close the front transport cover, and then close the top transport cover of the finisher.

Note

- If the cover is not completely closed, a message will appear and the machine remains paused.

Replacing Stamp

If the machine offers the Fax service and the Stamp Kit (optional) is installed, replace the stamp cartridge when stamp impressions start to fade.

Important

- Do not touch the ink pad of the stamp cartridge as the ink may be adhered to the pad. If it comes into contact with your skin, wash immediately.
- Problems caused by using consumables not recommended by Fuji Xerox are not covered by the maintenance service contract.
- Before using consumables, carefully read instructions and precautions on their packages.

Note

- We recommend always keeping spare consumables/periodic replacement parts in stock.
- To order consumables, contact our Customer Support Center.
  (Product Name: Stamp Replacement Kit, Product Code: F451)

1 Pull up the knob on the document feeder top cover, and open the document feeder top cover completely.

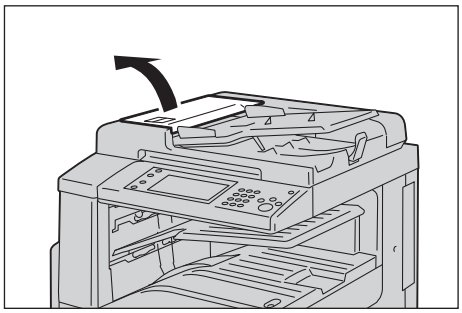

2 Pull up the lever to open the inner cover.

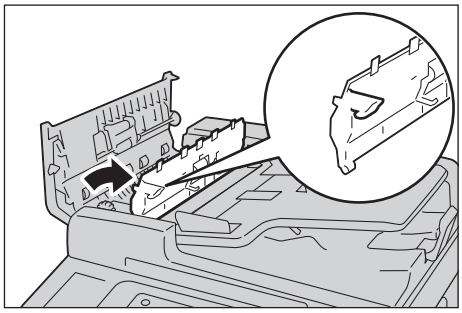

3 Stick the supplied pin into the old stamp cartridge, and pull it straight out of the machine.

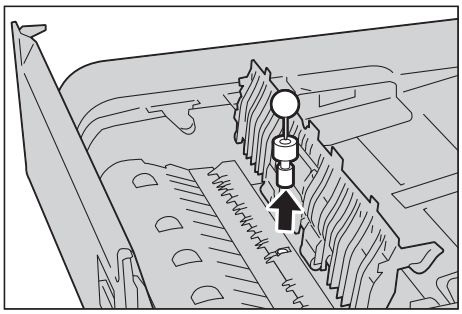

Note

- If only the sponge part of the stamp cartridge is removed, make sure of removing the bottom part of the cartridge.

4 Insert the new stamp cartridge.

5 Close the inner cover of the document feeder.

6 Close the left cover of the document feeder until it clicks into place, and confirm that there is no space between the near or far side of the cover and the document feeder.

Cleaning the Machine

This section describes how to clean the machine such as the machine exterior, document cover, document feeder, and document glass.

⚠WARNING

When cleaning this product, use the designated cleaning materials exclusive to it. Other cleaning materials may result in poor performance of the product. Never use aerosol cleaners to avoid catching fire and explosion.

⚠CAUTION

When cleaning this product, always switch off and unplug it. Access to a live machine interior may cause electric shock.

Cleaning the Exterior

The following describes how to clean the exterior of the machine.

Important

- Do not use benzene, paint thinner, or other volatile liquids or spray insect repellent on the machine as they might discolor, deform, or crack covers.
- Cleaning the machine with an excessive amount of water may cause the machine to malfunction or damage documents during copying.

1. Wipe the exterior with a firmly wrung soft cloth moistened with water.

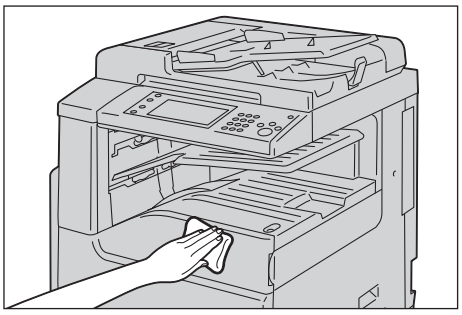

Important

- Do not use cleaning agents other than water or neutral detergent.

Note

- If you cannot remove the dirt easily, gently wipe the machine with a soft cloth moistened with a small amount of neutral detergent.

2. Wipe off any excess water with a soft cloth.

Cleaning the Interior (LED Printheads)

The following describes how to clean the interior (LED printheads) of the machine.

Normally, clean the LED printheads when you replace the waste toner container. However, if you have image quality problems such as white or colored stripes appearing on copied or printed outputs, clean the LED printheads.

Important

- Clean the LED printheads periodically when you replace the waste toner container.

1 Make sure that the machine is not operating, and open the front cover.

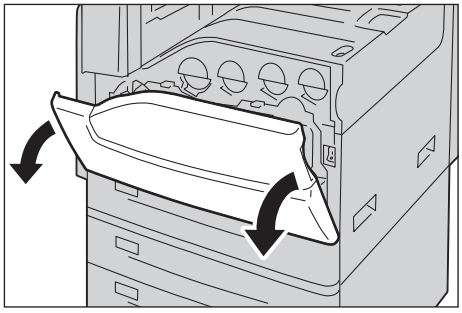

2 Turn the lock lever counterclockwise to unlock the waste toner container. While holding down the tabs on the top of the waste toner container, lay the container down toward you and then pull out the container upward at an angle.

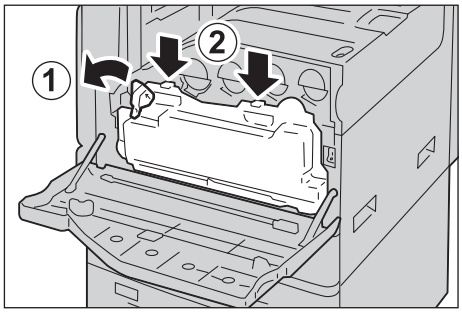

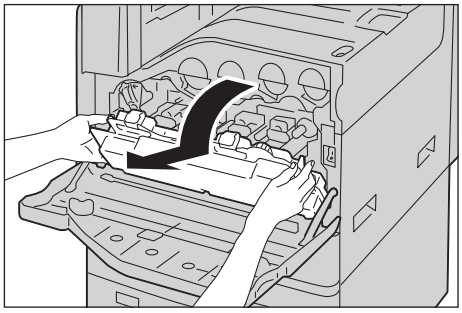

3 Remove the cleaning bar from the back side of the front cover, and then clean each of the LED printheads once with the bar.

Insert the cleaning bar into each slot until it stops, and then slowly slide the bar back out.

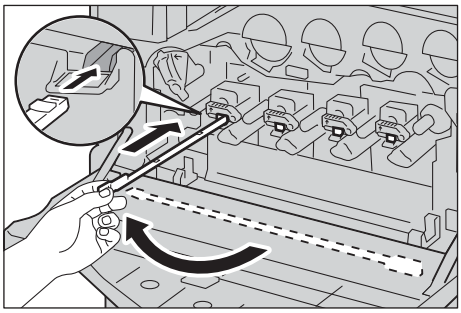

4 Return the cleaning bar to the back side of the front cover.

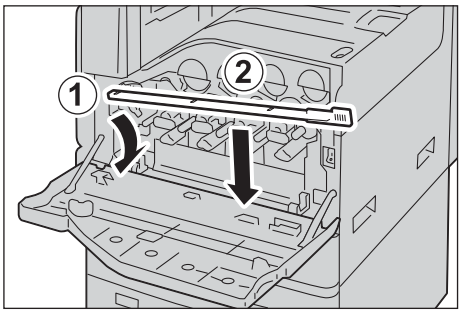

5 Align the dents on the bottom of the waste toner container with the tabs on the machine.

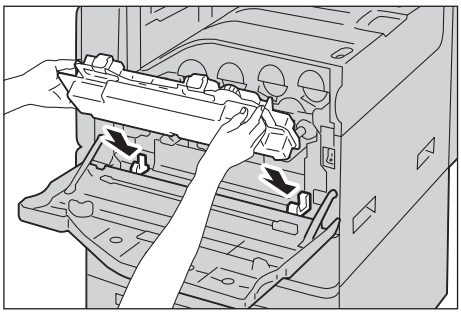

6 Raise the waste toner container toward the inside of the machine until it clicks into place.

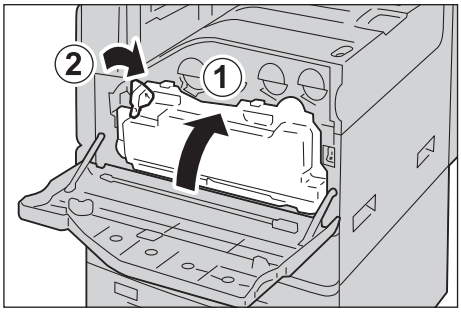

7 Close the front cover.

Note

- If the front cover is not completely closed, a message will appear and the machine will remain paused.

Cleaning the Touch Screen

The following describes how to clean the touch screen.

1 Wipe only the LCD area with a soft cloth moistened with neutral detergent or alcohol.

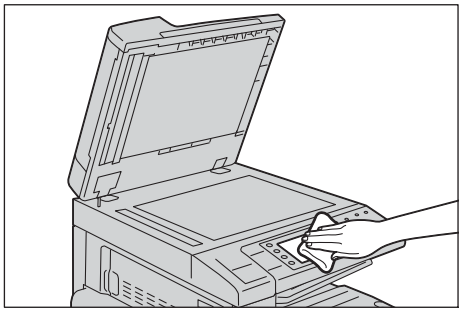

Important

- When you moisten the cloth with neutral detergent or alcohol, do not allow the excess liquid to drip down from the cloth. If the cloth is moistened with the excess liquid, wring the cloth gently before wiping the LCD area.
- Do not use any volatile liquids on the machine such as benzene and paint thinner, or insect repellent as these may discolor, deform, or crack the machine exterior.
- Cleaning the touch screen with an excessive force may cause the screen to be damaged. Wipe the screen gently.

Cleaning the Document Cover and Document Glass

If the document cover and document glass are dirty, streaks or smears may appear on copies, faxes, or scanned documents and the machine may not properly detect document sizes.

To ensure clean copies at all times, clean the document cover and the document glass about once a month.

Important

- Do not use benzene, paint thinner, or other organic solvents. Doing so might damage paint or coating on plastic parts.
- Cleaning the machine with an excessive amount of water may cause the machine to malfunction or damage documents during copying, faxing, or scanning.

1 Wipe the document cover with a soft cloth moistened with water to remove any dirt, and then wipe it with a soft, dry cloth.

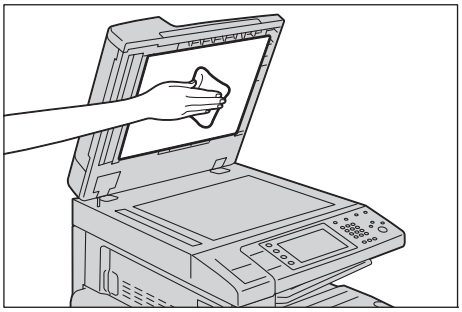

Important

- Do not use cleaning agents other than water or neutral detergent.

Note

- If you cannot remove dirt easily, gently wipe the document cover with a soft cloth moistened with a small amount of neutral detergent.

2 Wipe the document glass with a soft cloth moistened with water to remove any dirt, and then wipe it with a soft, dry cloth.

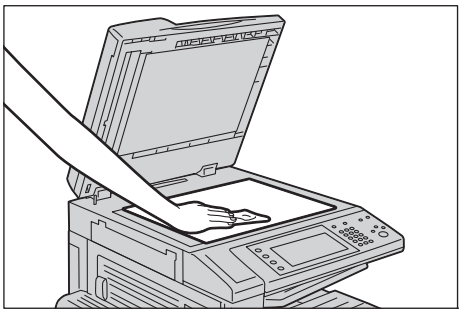

Important

- Do not use cleaning agents other than water or neutral detergent.

Note

- If you cannot remove dirt easily, gently wipe the document glass with a soft cloth moistened with a small amount of neutral detergent.

Cleaning the White Chute and Constant Velocity Transport Glass

If the White Chute or constant velocity transport glass become soiled, smudges may appear on copies, faxes, or scanned documents and the machine may not properly detect document sizes.

To ensure clean copies at all times, clean the White Chute and constant velocity transport glass about once a month.

Important

- Do not use benzene, paint thinner, or other organic solvents. Doing so might damage paint or coating on plastic parts.
- Cleaning the machine with an excessive amount of water may cause the machine to malfunction or damage documents during copying, faxing, or scanning.

1 Wipe the White Chute with a soft cloth moistened with water to remove any dirt, and then wipe it with a soft, dry cloth.

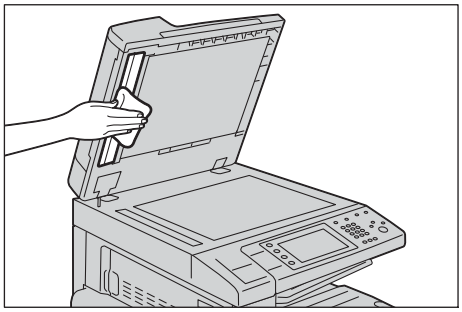

Important
- Do not press the film with an excessive force as it can be easily damaged.

Important
- Do not use cleaning agents other than water or neutral detergent.

Note
- If you cannot remove dirt easily, gently wipe the film with a soft cloth moistened with a small amount of neutral detergent.

2 Wipe the constant velocity transport glass with a soft cloth moistened with water to remove any dirt, and then wipe it with a soft dry cloth.

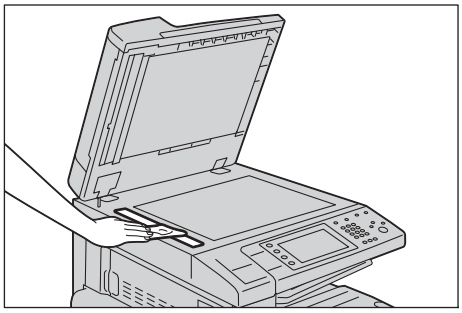

Important
- Do not use cleaning agents other than water or neutral detergent.

Note
- If you cannot remove dirt easily, gently wipe the glass with a soft cloth moistened with a small amount of neutral detergent.

Cleaning the Document Feeder Rollers

If the document feeder rollers become soiled, smudges may appear on copies, faxes, or scanned documents and paper jams may occur.

To ensure clean copies at all times, clean the document feeder roller about once a month.

Important
- Do not use benzene, paint thinner, or other organic solvents. Doing so might damage paint or coating on plastic parts.
- Cleaning the machine with an excessive amount of water may cause the machine to malfunction or damage documents during copying, faxing, scanning, or printing.

1 Pull up the knob on the document feeder top cover, and open the document feeder top cover completely.

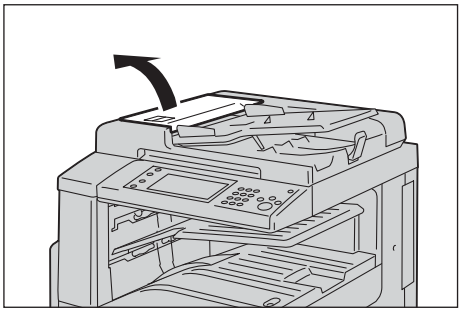

Note

- When you fully open the cover, it enters a fixed position. Open the cover gently.

2 While turning the rollers, wipe them with a soft cloth moistened with water.

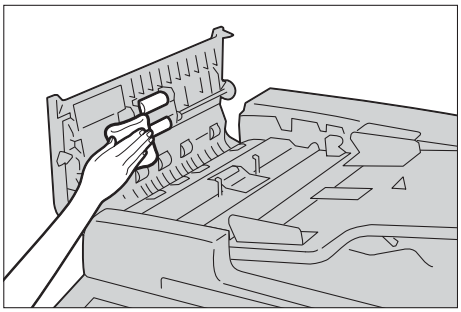

Important

- Do not use cleaning agents other than water or neutral detergent.
- Use a cloth firmly wrung to prevent water drops from falling into the machine. If water gets into the machine, it may cause the machine to malfunction.

Note

- If you cannot remove dirt easily, gently wipe the rollers with a soft cloth moistened with a small amount of neutral detergent.

3 Close the document feeder left cover until it clicks into place, and confirm that there is no space between the near or far side of the cover and the document feeder.

Executing Calibration

The machine can automatically calibrate colors using the calibration chart when the reproducibility of density or color in copies and prints deteriorates. The machine can adjust the gradation for each screen type set in the machine in advance.

The following three types of screen are available.

Note

- We recommend executing auto calibration for all three screen types. When the adjustment for one screen type is complete, specify the next screen type and repeat the procedure.
- If color is not calibrated despite the periodic execution of auto calibration, contact our Customer Support Center.
- Confirm the settings of the following items under [Tools] > [System Settings] > [Copy Service Settings] > [Copy Defaults] in the System Administration mode before executing auto calibration:
  - Lighten/Darken: Normal
  - Contrast: Normal
  - Sharpness: Normal
  - Saturation: Normal
  - Color Balance: 0, 0, 0
  - Color Shift: Normal
- After finishing the auto calibration, change the settings of [Copy Defaults] if necessary. For information on [Copy Defaults], refer to "Copy Defaults" (P.183).
- During auto calibration, the machine cannot receive print jobs and faxes.

■ [Copy Job]

Calibrates the screen for copying.

■ [Print Job 1]

For PCL print drivers

- Calibrates the screen used for the functions ([Image Quality], [Image Adjustment Mode], and [Image Types]) set in the [Color Options] tab.
- Calibrates the screen when [Auto Screening], [Fineness], or [Standard] is selected for [Screen] in the [Advanced] tab.

For PostScript print drivers

- Calibrates the screen when [High Quality] for [Image Quality] and [Auto Screening], [Fineness], or [Standard] for [Screen] in the [Color Options] tab is selected.
- Calibrates the screen when [High Speed] for [Image Quality] and [Fineness] or [Standard] for [Screen] in the [Color Options] tab is selected.

■ [Print Job 2]

For PCL print drivers

- Calibrates the screen when [Gradation] is selected for [Screen] in the [Advanced] tab.
- Calibrates the screen when [Print Page Mode] is enabled in the [Advanced] tab.

For PostScript print drivers

- Calibrates the screen when [High Speed] of [Image Quality] and [Auto Screening] or [Fineness] of [Screen] in the [Color Options] tab is selected.

The following describes how to perform calibration.

1 Select [Calibration] on the Services Home screen.

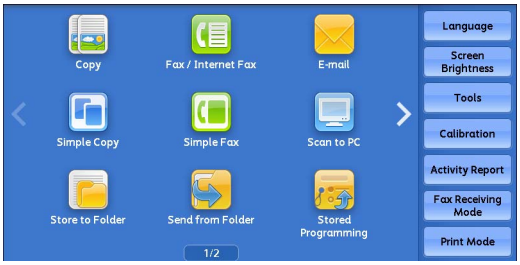

If [Calibration] is not displayed, follow the procedure below.

1) Press the <Log In/Out> button.

2) Enter the system administrator's user ID with the numeric keypad or the keyboard displayed on the screen, and select [Enter].

When a passcode is required, select [Next] and enter the system administrator's passcode, and select [Enter].

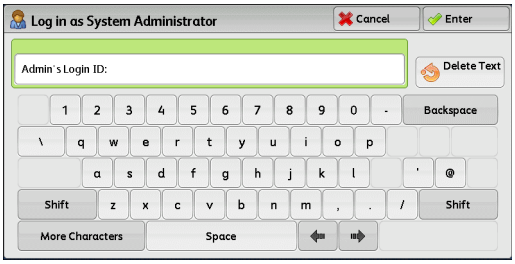

Note

- The default user ID is "11111".
- The default passcode is "x-admin".

3) Select [Tools] on the Services Home screen.

Note

- When the Services Home screen is not displayed on the touch screen, press the <Services Home> button.

4) Select [System Settings] > [Common Service Settings] > [Image Quality Adjustment].

2 Press the <Log In/Out> button.

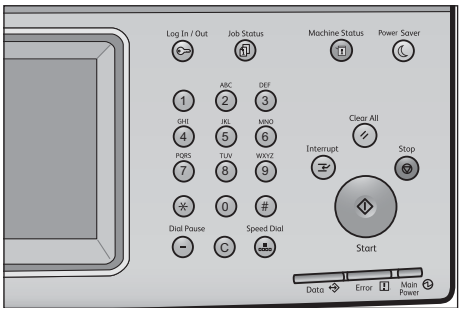

Note

- You also can select [Calibration] on the Services Home screen. Selecting [Calibration] on the Services Home screen shows the screen in step 6.

3 Select [System Settings] > [Common Service Settings] > [Image Quality Adjustment].

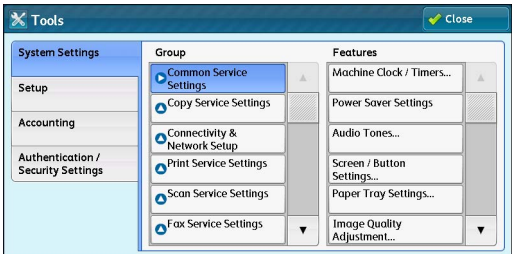

4 Select [Calibration].

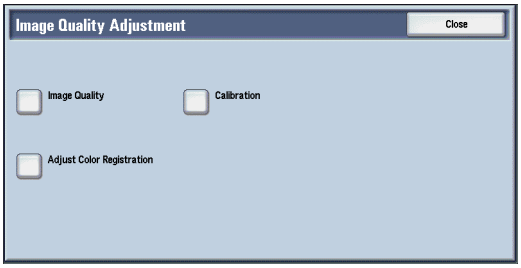

5 Set [Screen Type], [Paper Supply], and [Target].

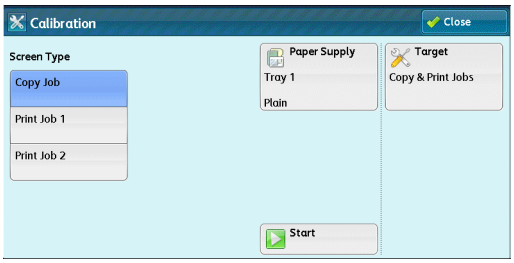

Note

- For Target, select from [Copy & Print Jobs], [Copy Jobs Only], [Print Jobs Only], and [None]. When [Copy & Print] is not selected for [Target], calibration is not valid for the mode not listed in [Target].

6 Select [Start].

Note

- The message "Outputting the Calibration Chart... - Copy Job" appears and the document for calibration (Calibration Chart) is printed.

7 Align the magenta patch (squares printed at the top and bottom of the Calibration Chart) of the printed Calibration Chart against the left side of the document glass, and load the chart facing down on the document glass.

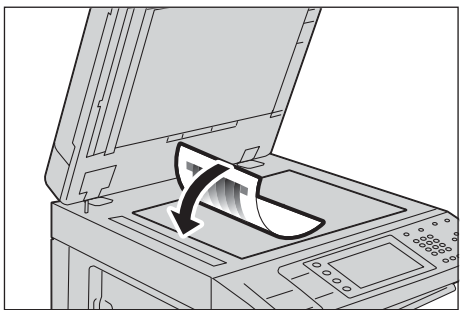

Note

- Place the Calibration Chart on the document glass.

8 Place at least five sheets of white paper on the Calibration Chart to cover the Chart and close the document cover.

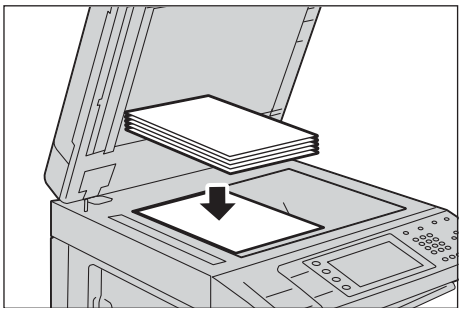

9 Select [Start].

The message “Calibration in progress. - Copy Job” appears and the machine automatically calibrates the colors. It takes about 10 seconds to complete calibration.

A screen showing the result appears.

10 Select [Confirm].

11 To continue calibration for other screen types, repeat steps 3 to 8.

12 Select [Close] repeatedly until the Services Home screen is displayed.

Note

- When you configure settings under [System Settings] or [Setup] and then press the <Services Home> button, the screen directly goes back to the Services Home screen.

13 Copy or print to confirm the image quality.

Note

- During auto calibration, the machine cannot receive print jobs and faxes.

Printing a Report/List

You can print a report/list to check the settings and communication status.

Note

- When the <Data> indicator is not lit, you cannot print the Stored Documents List.

Reference

- For information on the types of report/list, refer to "Print Reports" (P.115).

1 Press the <Machine Status> button.

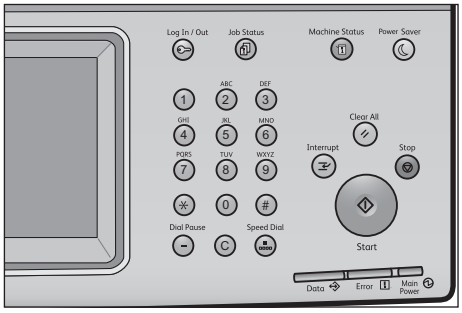

2 Select [Print Reports].

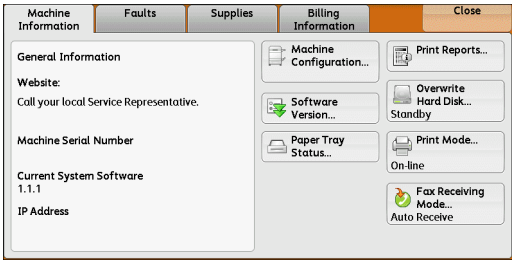

Note

- If [Print Reports Button] under [Reports] is set to [Disabled], the [Print Reports] button appears only when the [Tools] button is displayed on the Services Home screen. For more information on Reports, refer to "Reports" (P.164).
- If you want to print [Billing Data List] or [Auditron Report (Fax Jobs)], insert a card to the machine before instructing print.

3 Select the service that you want a report or list for.

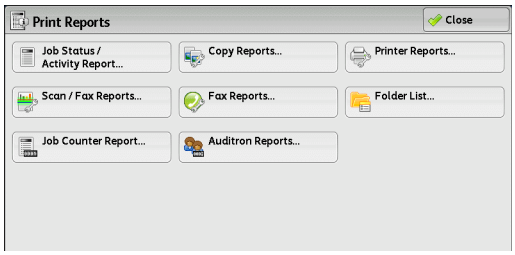

4 Select a report or list to print, and then press the <Start> button.

Note

- The reports or lists displayed on the screen vary depending on the machine configuration.

Deleting a Private Charge Print Job with an Invalid User ID

When the Private Charge Print feature is used, all the print jobs with a User ID, regardless of its validity, are stored with the Private Charge Print feature. The system administrator can set the expiration date and can set up the machine to delete the expired jobs automatically, or manually delete them.

This section describes how to delete documents with an invalid User ID stored with the Private Charge Print feature.

Reference

- For more information on the Private Charge Print feature, refer to "Job Status" > "Printing and Deleting Stored Jobs", and "Computer Operations" > "Print" in the User Guide.
- For more information on how to set the period of time save jobs, refer to "Stored File Settings" (P.271).

1 Press the <Log In/Out> button.

2 Enter the system administrator's user ID with the numeric keypad or the keyboard displayed on the screen, and select [Enter].

When a passcode is required, select [Next] and enter the system administrator's passcode, and select [Enter].

Note

- The default user ID is "11111".
- The default passcode is "x-admin".

3 Press the <Job Status> button.

4 Select the [Secure Print Jobs & More] tab.

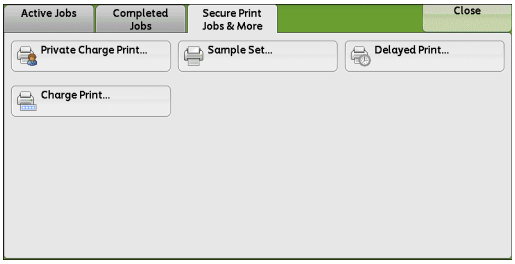

5 Select [Private Charge Print].

6 Select the User ID to delete, and then select [Job List].

7 Select the job to delete, and then select [Delete].

Setting Restore Tool

Setting Restore Tool backs up the settings data of the machine to a network-connected computer to prevent the loss of data resulting from the malfunction of the machine's hard disk.

The feature is designed to restore data to the machine after the hard disk is replaced.

For more information on Setting Restore Tool, contact our Customer Support Center.

Note

- You can back up the setting data of the machine when the hard disk and the Ethernet interface are installed on the machine.

The following data can be backed up on the computer:

- Address Book
- Folder (except for document files)
- User account list
- Job Flow
- Stored Programming
- Job log
- Error log
- Auditron log
- Other information such as user setting data

Users cannot replace the hard disk by themselves. When replacing the hard disk, contact our Customer Support Center.

4

Machine Status

Overview of Machine Status

You can check machine status and the number of printed pages on the screen. You can also print various reports/lists to check the job history, settings and registered information.

1 Press the <Machine Status> button.

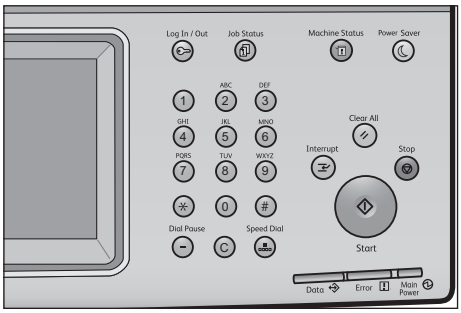

You can check the following information on the [Machine Status] screen:

■ Machine Information

You can check the machine configuration, paper tray status, and hard disk overwriting status.

You can also change or set print modes, and check the number of pages printed per meter or per user.

You can also print various reports/lists to check the job history, settings and registered information.

Note

- [Overwrite Hard Disk] is displayed when the hard disk is installed in the machine. For more information, contact our Customer Support Center.

Reference

- For more information, refer to "Machine Information" (P.113).

■ Faults

You can check the information on errors that occurred on the machine.

Reference

- For more information, refer to "Faults" (P.132).

■ Supplies

You can check the status of consumables.

Reference

- For more information, refer to "Supplies" (P.133).

■ Billing Information

You can check the number of pages printed by meter.

Reference

- For more information, refer to "Billing Information" (P.134)".

Machine Information

On the [Machine Information] screen, you can check the machine configuration and paper tray status, print various reports/lists, and change and set print mode settings.

The following shows the reference section for each item.

"General Information" (P.113)

"Paper Tray Status" (P.114)

"Print Reports" (P.115)

"Automatically Printed Reports/Lists" (P.125)

"Overwrite Hard Disk" (P.127)

"Print Mode" (P.127)

"Fax Receiving Mode" (P.130)

1 Press the <Machine Status> button.

2 On the [Machine Information] screen displayed, you can check the machine status.

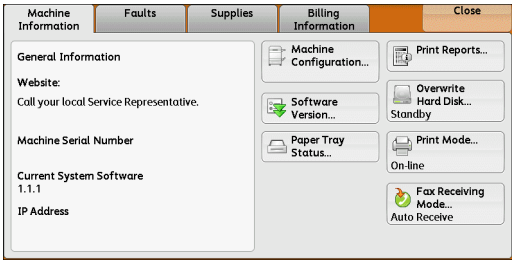

General Information

On the [General Information] screen, you can check the serial number of the machine, machine configuration, and software version.

1 Check the general information.

■ Website

Tells you whom to contact when making inquiries about maintenance and operation.

■ Machine Serial Number

Indicates the serial number of the machine.

■ Current System Software

Indicates the current system software.

■ IP Address

Indicates the IP address of the machine.

■ Machine Configuration

Displays the [Machine Configuration] screen.

Reference

- For more information, refer to "[Machine Configuration] Screen" (P.114).

■ Software Version

Displays the [Software Version] screen.

Reference

- For more information, refer to "[Software Version] Screen" (P.114).

[Machine Configuration] Screen

You can check the machine configuration.

1. Select [Machine Configuration].
2. Check the machine configuration on the screen displayed.

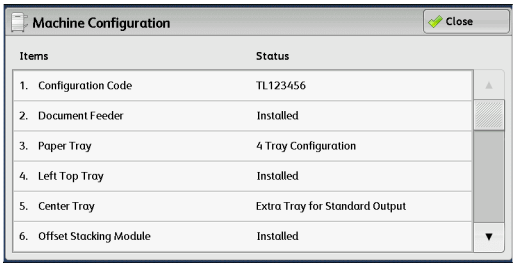

Note

- Select[▲]to display the previous screen or[▼]to display the next screen.
- Scroll the list by drag or flick operation to switch the screen to be displayed. For information on how to drag or flick, refer to "Product Overview" > "Touch Screen" in the User Guide.

[Software Version] Screen

You can check the software version.

1. Select [Software Version].
2. Check the software versions.

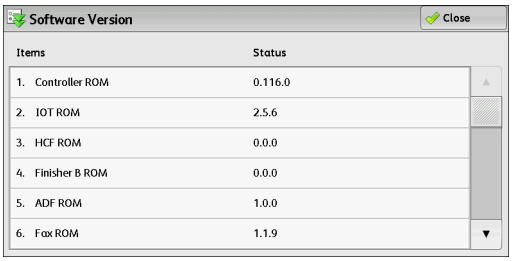

Paper Tray Status

You can check the paper trays set on the machine. On the screen, you can check the following items:

- Status
- % Full
- Size
- Paper Type

1 Select [Paper Tray Status].

2 Check the status of the paper trays.

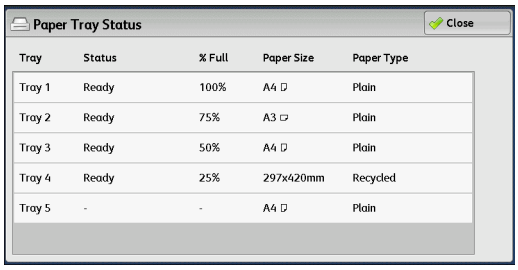

Print Reports

The following describes how to print a report and a list.

Note

- The items displayed vary depending on the optional features installed.

1 Select [Print Reports].

2 Select the type of a report or a list to print.

Note

- The screen as shown on the right appears when the [Tools] button is displayed on the Services Home screen.

Job Status/Activity Report

1 Select [Job Status/Activity Report].

Note

- To display the [Job Status/Activity Report] screen, select the <Machine Status> button, and then select [Machine Information] > [Print Reports] > [Job Status/Activity Report].

2 Select a report or a list to print.

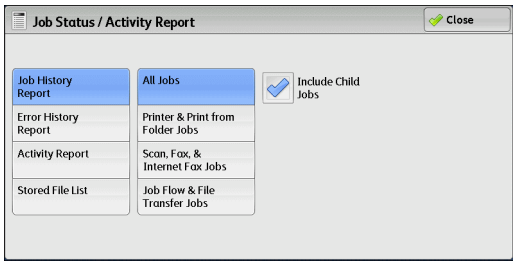

3 Press the <Start> button.

■ Job History Report

You can check the status or result of each job. Up to 200 latest jobs can be printed. Select a report to print from [All Jobs], [Printer & Print from Folder Jobs], [Scan, Fax, & Internet Fax Jobs], [File Transfer Jobs], or [Job Flow & File Transfer Jobs].

Selecting [Include Child Jobs] check box prints each related job on each line. Deselecting this check box prints the multiple related jobs (such as job flow jobs) on one line.

You can also set up the machine to automatically print a [Job History Report] every 50 jobs.

Reference

- For information on the auto print of a job history report, refer to "Reports" (P.164). When you set the machine to print a job history report automatically, the machine prints the results of all jobs.

■ Error History Report

You can print information on errors occurred in the machine. The latest 50 errors are printed.

■ Activity Report

You can check whether transmissions completed successfully or not. The remote terminal name and the result and status are recorded by sorting into incoming or outgoing fax.

The following information is not included in the Activity Report.

- Redialed transmissions and pollings.
- Deleted documents that were waiting to be transmitted.
- When the power is shut off, or when a system error occurs during an activity.

You can also set up the machine to automatically print a [Job History Report] every 50 jobs.

Note

- The use of ApeosWare Log Management (sold separately) allows you to import the contents of an Activity Report to a computer. For information on ApeosWare Log Management or ApeosWare Accounting Service, refer to the manuals provided with the software.

Reference

- For information on the settings, refer to "Reports" (P.164).
- For more information about the Activity Report, refer to"Activity Report" (P.746).

Copy Reports

1 Select [Copy Reports]

Note

- To display the [Copy Reports] screen, select the <Machine Status> button, and then select [Machine Information] > [Print Reports] > [Copy Reports].

2 Select [Configuration Report].

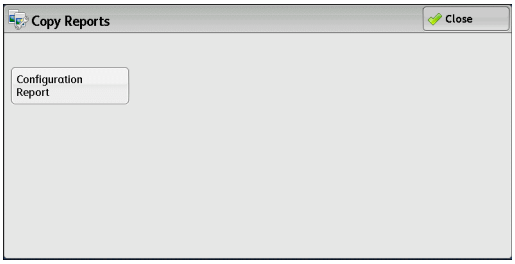

3 Press the <Start> button.

■ Configuration Report

You can check the hardware configuration, network information, and print and copy settings of the machine.

Note

- The contents of [Configuration Report] are identical whether it is printed from [Copy Reports], [Printer Reports], [Scan Reports], or [Fax Reports].

Printer Reports

1 Select [Printer Reports].

Note

- To display the [Printer Reports] screen, select the <Machine Status> button, and then select [Machine Information] > [Print Reports] > [Printer Reports].

2 Select a list to print.

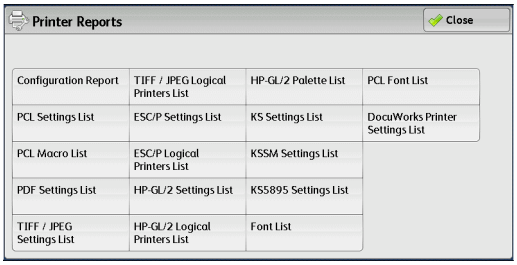

Note

- The items displayed vary depending on the options installed.

3 Press the <Start> button.

You can print the following items when printer related options are installed.

When Adobe® PostScript® 3™ Kit (optional) is installed:

- PostScript Logical Printers List
- PostScript Font List

■ Configuration Report

You can check the hardware configuration, network information, and print and copy settings of the machine with the report.

Note

- The contents of [Configuration Report] are identical whether it is printed from [Copy Reports], [Printer Reports], [Scan Reports], or [Fax Reports].

■ PCL Settings List

Prints the settings for the PCL printer.

■ PCL Macro List

Prints the list of forms registered for PCL.

■ PDF Settings List

Prints the settings configured in the PDF printer mode.

■ TIFF/JPEG Settings List

Prints the settings configured in the TIFF and JPEG printer mode.

■ TIFF/JPEG Logical Printers List

Prints the list of logical printers created in the TIFF and JPEG printer mode.

Reference

- You can configure the setting for TIFF and JPEG logical printers using CentreWare Internet Services. For more information on the settings, refer to the help of CentreWare Internet Services .

Important

- To display the online help for CentreWare Internet Services, users need to have the environment to connect to the internet. The communication fee shall be borne by you.

■ PostScript Logical Printers List

Prints the list of logical printers created in PostScript.

Reference

- You can configure the setting for PostScript logical printers using CentreWare Internet Services. For more information, refer to the help of CentreWare Internet Services.

Important

- To display the online help for CentreWare Internet Services, users need to have the environment to connect to the internet. The communication fee shall be borne by you.

■ ESC/P Settings List

Prints the settings configured in the ESC/P-K emulation mode.

■ ESC/P Logical Printers List

Prints the programming settings configured in the ESC/P-K emulation mode.

■ ESC/P User Defined List

Prints the list of the registered forms, logos, and patterns for ART IV, ESC/P and PC-PR201H.

■ HP-GL/2 Settings List

Prints the settings for the HP-GL®, HP-GL/2® and HP-RTL emulation modes.

■ HP-GL/2 Logical Printers List

Prints the stored programming settings for the HP-GL®, HP-GL/2®, and HP-RTLemulation modes.

■ HP-GL/2 Palette List

Prints the sample list in 256 colors that can be set with the pen attribute on HP-GL® and HP-GL/2® emulation modes.

■ KS Settings List

Prints the settings for the KS5843 emulation mode.

■ KSSM Settings List

Prints the settings for the KSSM emulation mode.

■ KS5895 Settings List

Prints the settings for the KS5895 emulation mode.

Reference

- For information on KS5843/KSSM/KS5895 emulation mode, refer to the Administrator Guide for the Korean model.

■ Font List

Prints the list of fonts available on the machine.

Note

- Information printed varies depending on the options installed.

■ PCL Font List

Prints the fonts available in PCL.

■ PostScript Font List

Prints the fonts available in PostScript.

■ DocuWorks Printer Settings List

Prints the settings for DocuWorks Direct Print.

Scan Reports

1. Select [Scan Reports].

Note

- To display the [Scan Reports] screen, select the <Machine Status> button, and then select [Machine Information] > [Print Reports] > [Scan Reports].

2. Select a list to print.

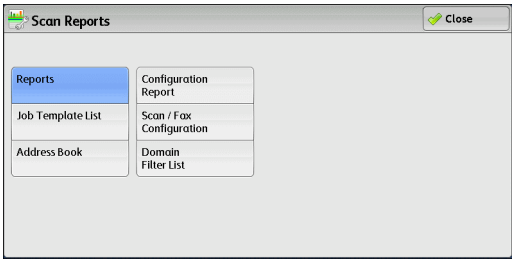

3. Press the <Start> button.

■ Reports

You can print the Configuration Report, Scan/Fax Configuration Report, and Domain Filter List. Select a list to print, and then press the <Start> button.

◆ Configuration Report

You can check the hardware configuration, network information, and print and copy settings of the machine.

Note

- The contents of [Configuration Report] are identical whether it is printed from [Copy Reports], [Printer Reports], [Scan Reports], or [Fax Reports].

◆ Scan/Fax Configuration

You can check the settings configured for the Scan feature and the Fax feature.

◆ **Domain Filter List**

You can check the settings configured for the domain which filters data transmissions.

■ Address Book

You can check the settings for the address numbers. When you specify a range of address numbers, the list of settings for the specified address numbers is printed. Each page contains the settings information on 50 address numbers.

1. Select [Address Book].
2. Specify a range of address numbers to print.

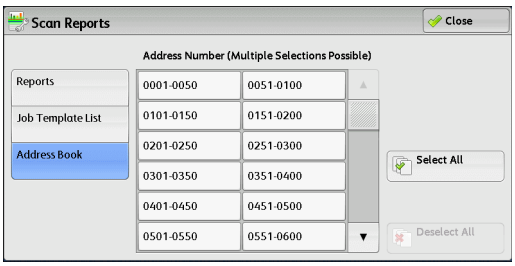

3. Press the <Start> button.

Fax Reports

1. Select [Fax Reports].

Note

- To display the [Fax Reports] screen, select the <Machine Status> button, and then select [Machine Information] > [Print Reports] > [Fax Report].

2. Select a list to print.

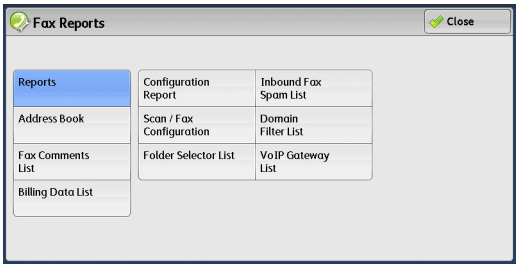

3. Press the <Start> button.

■ Reports

You can print the Configuration Report, Scan/Fax Configuration Report, Folder Selector List, Inbound Fax Spam List, Domain Filter List, and VoIP Gateway List. Select a list to print, and then press the <Start> button.

■ Configuration Report

You can check the hardware configuration, network information, and print and copy settings of the machine.

Note

- The contents of [Configuration Report] are identical whether it is printed from [Copy Reports], [Printer Reports], [Scan Reports], or [Fax Reports].

◆ Scan/Fax Configuration

You can check the settings configured for the Fax feature and the Scan feature.

Note

- The contents of [Configuration Report] are identical whether it is printed from [Copy Reports], [Printer Reports], [Scan Reports], or [Fax Reports].

◆ Folder Selector List

You can check the settings for the Folder Sorting feature.

◆ Inbound Fax Spam List

You can check the settings for the G3 ID (telephone numbers) for which fax reception is restricted.

◆ Domain Filter List

You can check the settings configured for the domain which filters data transmissions.

◆ VoIP Gateway List

You can check the registration for VoIP gateways.

■ Address Book

You can check the settings for the address numbers (speed dial), fax group recipients, and relay stations.

When you specify a range of address numbers, the lists of settings for the specified address numbers and relay stations are printed. Each page contains the settings information on 50 address numbers.

Reference

- For information on how to register speed dial and fax group recipients, refer to "Add Address Book Entry" (P.289) and "Create Fax Group Recipients" (P.299).

Selecting [Address Book] displays the screen for specifying a range of address numbers. Select a range of numbers, and then press the <Start> button.

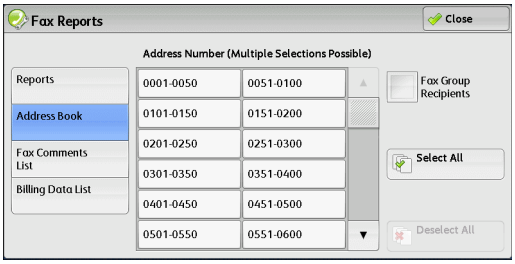

◆ Fax Group Recipients

You can print the list of settings for Fax Group Recipients.

◆ Select All

You can print the lists of settings for all address numbers, fax group recipients, and relay stations.

■ Fax Comments List

You can check the registered comments to use on fax cover sheets.

■ Billing Data List

You can check the registration status of the billing data.

Note

- [Billing Data List] is displayed when [Fax/Internet Fax Service] is set to [Enable Accounting] under [Accounting] > [Accounting Type] > [Local Accounting] > [Auditron Mode].

Selecting [Billing Data List] displays the screen for specifying a range of address numbers. Select a range of numbers, and then press the <Start> button.

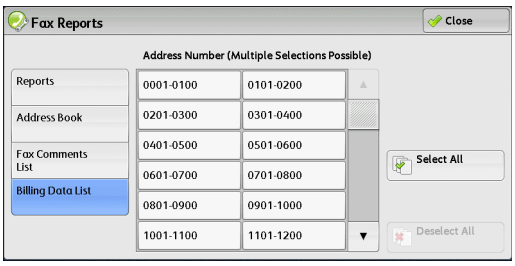

◆ Select All

You can print the list of all billing data.

Folder List

Prints the list of folder settings and the procedure for saving files to folders.

Note

- [Folder List] appears when the [Tools] button is displayed on the Services Home screen.

Reference

- For information on how to create a folder, refer to "Create Folder" (P.276).

1 Select [Folder List].

Note

- To display the [Folder List] screen, select the <Machine Status> button, and then select [Machine Information] > [Print Reports] > [Folder List].

2 Select a range of folder numbers to print.

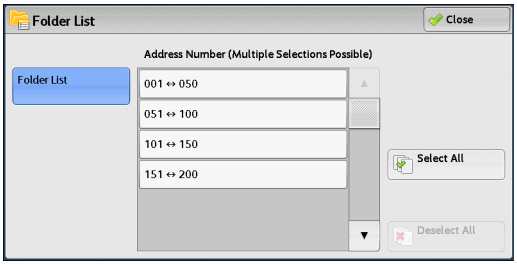

3 Press the <Start> button.

Job Counter Report

Prints the counter report for each job. You can check the breakdown of the number of actual use of the machine by feature (such as the number of pages printed and the number

of times used) and cumulative time when the machine is used (such as runtime, standby time, Low Power mode, Sleep mode, and power-off time) by minutes on the Job Counter Report.

Note

- [Job Counter Report] appears when the [Tools] button is displayed on the Services Home screen.

1 Select [Job Counter Report].

Note

- To display the [Job Counter Report] screen, select the <Machine Status> button, and then select [Machine Information] > [Print Reports] > [Job Counter Report].

2 Select [Job Counter Report].

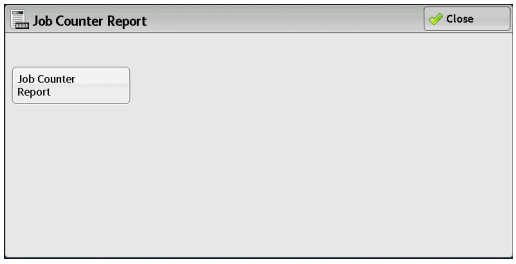

3 Press the <Start> button.

Auditron Reports

You can print an auditron report by each user. Note that the content on the screen differs depending on whether the Auditron mode for services is enabled or not.

Note

- [Auditron Reports] appears when the [Tools] button is displayed on the Services Home screen.
- You cannot output the report to a file. To output a report to a file, use ApeosWare Log Management (sold separately) or ApeosWare Accounting Service (sold separately).

■ When [Accounting Type] is set to other than [Local Accounting]

When [Accounting Type] of each service is set to other than [Local Accounting], the following screen appears, allowing you to print a Meter Report (Print Jobs).

1 Select [Auditron Reports].

Note

- To display the [Job Counter Report] screen, select the <Machine Status> button, and then select [Machine Information] > [Print Reports] > [Auditron Reports].

2 Select [Meter Report (Print Jobs)].

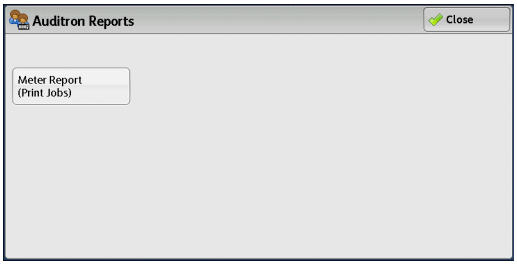

3 Press the <Start> button.

◆ **Meter Report (Print Jobs)**

You can check the total number of printed pages and sheets of paper used for each client (job owner). [Meter Report (Print Jobs)] counts pages from the time at which the data is initialized.

■ When [Accounting Type] is set to [Local Accounting]

When [Accounting Type] is set to [Local Accounting], the [Auditron Reports] screen appears. You can print the auditron report per user for the services of which the Auditron mode is set to [Enable Accounting].

Reference

- For information on enabling the Auditron feature for each service, refer to "Accounting" (P.145).

1 Select [Auditron Reports].

Note

- To display the [Auditron Reports] screen, select the <Machine Status> button, and then select [Machine Information] > [Print Reports] > [Auditron Reports].

2 Select an auditron report to print.

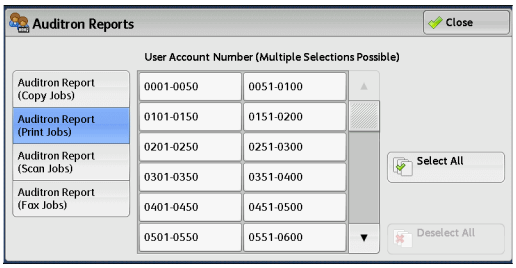

3 Select a range of user numbers to print.

Note

- Selecting [Select All] selects all users.

4 Press the <Start> button.

◆ **Auditron Report (Copy Jobs)**

You can check the total number of pages copied and printed on the machine. If the limit is set for the number of pages or colors that can be scanned, you can also check the limit value. [Auditron Report (Copy Jobs)] counts pages from the time at which the data is initialized.

Note

- [No.] displayed on the report is the User Administration Number assigned when a user is registered under [Accounting] or [Authentication/Security Settings].

◆ **Auditron Report (Print Jobs)**

You can check the total number of printed pages and sheets of paper used for each client (job owner). [Auditron Report (Print Jobs)] counts pages from the time at which the data is initialized.

Important

- When [Print Service] is set to [Disable Accounting] in [Auditron Mode] under [Accounting Type], [Meter Report (Print Jobs)] is displayed instead of [Auditron Report (Print Jobs)]. For more information on Meter Report (Print Jobs), refer to "Meter Report (Print Jobs)" (P.124).

Note

- [No.] displayed on the report is the User Administration Number assigned when a user is registered under [Accounting] or [Authentication/Security Settings].

◆ **Auditron Report (Scan Jobs)**

You can check the total number of pages scanned with the machine. If the limit is set for the number of pages that can be scanned, you can also check the limit value. [Auditron Report (Scan Jobs)] counts pages from the time at which the data is initialized.

Note

- [No.] displayed on the report is the User Administration Number assigned when a user is registered under [Accounting] or [Authentication/Security Settings].

◆ **Auditron Report (Fax Jobs)**

You can check the total number of fax transmissions/receptions and the total number of pages transmitted for each user.

Note

- [No.] displayed on the report is the User Administration Number assigned when a user is registered under [Accounting] or [Authentication/Security Settings].

Automatically Printed Reports/Lists

Some reports/lists related to the Fax and Scan services can be printed only automatically. The following describes reports/lists that can be printed automatically.

Transmission Report - Job Undelivered

The report is automatically printed when a transmission of scanned data to a computer on a network or a transmission of scanned data by e-mail fails. When a fax, the IP Fax (SIP), or the Internet Fax transmission fails, this report is also printed. You can check a thumbnail of the scanned data and its transmission result.

You can set not to print out the Transmission Report - Undelivered automatically.

Reference

- For information on setting whether to print the report for e-mails automatically, refer to "Scan File Transfer Report" (P.165).
- For information on setting whether to print the report for faxes automatically, refer to "Transmission Report - Job Undelivered" (P.165).

Transmission Report

The report is automatically printed when a transmission of scanned data to a computer on a network or a transmission of scanned data by e-mail succeeds. When a fax, the IP Fax

(SIP), or the Internet Fax transmission succeeds, this report is also printed. You can check a thumbnail of the scanned data and its transmission result.

You can set not to print out the Transmission Report - Undelivered automatically.

Reference

- For information on setting whether to print the report for e-mails automatically, refer to "Scan File Transfer Report" (P.165).
- For information on setting whether to print the report for faxes automatically, refer to "Transmission Report - Job Undelivered" (P.165).

Folder Report

You can confirm a document that is stored in a folder.

Reference

- For information on setting whether to print the report automatically, refer to "Folder Report" (P.165).

Broadcast Report

You can check the result of a broadcast transmission. The recipients and transmission result/status are recorded.

If you set to print this report automatically, it is printed each time a broadcast transmission is completed.

Reference

- For information on setting whether to print the report automatically, refer to "Broadcast/Multi-Poll Report" (P.165).

Multi-poll Report

You can check the result of a multi-poll communication (polling from multiplerecipients). The remote terminal name and transmission result/status are recorded.

If you set to print this report automatically, it is printed each time a multi-polltransmission is completed.

Reference

- For information on setting whether to print the report automatically, refer to "Broadcast/Multi-Poll Report" (P.165).

File Transfer Report - Fax Server

This report is output after image data scanned by the machine is sent to a Server Fax server via a network. It contains the scanned document image and the transmission result. To have the report printed, enter the System Administration mode.

Reference

- For information on specifying whether or not to have the report printed automatically, refer to "Scan File Transfer Report (Fax Server)" (P.166).

Job Flow Error Report

This report notifies job flow errors. The date and time of the error occurred and the error codes are printed.

You can set not to print out the Job Flow Error Report automatically.

Reference

- For information on setting whether to print the report automatically, refer to "Job Flow Error Report" (P.166).

Overwrite Hard Disk

You can check the overwriting status of the hard disk. "Overwriting" indicates that the overwriting is in progress. "Standby" indicates that the overwriting is completed.

Note

- This feature does not appear for some models. An optional component is required. For more information, contact our Customer Support Center.
- [Overwrite Hard Disk] appears when [Overwrite Hard Disk] is enabled under [Authentication/Security Settings]. For more information, refer to "Overwrite Hard Disk" (P.325).

1. Select [Overwrite Hard Disk].
2. Check the overwriting status of the hard disk.

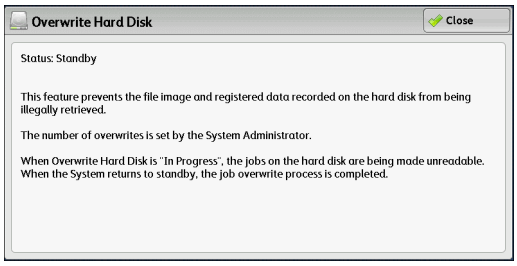

Print Mode

You can print the programming settings configured in the ESC/P-K emulation mode and retrieve the programming.

Note

- The items displayed vary depending on the options installed.

1. Press the <Machine Status> button.
2. Select [Print Mode].
3. Select [Off-line] or [On-line].

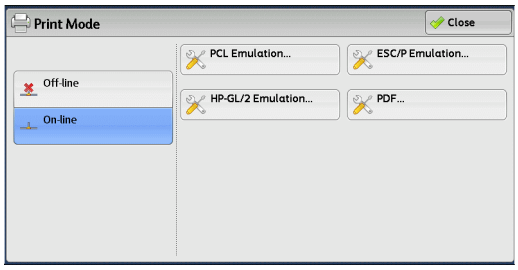

■Off-line

The machine does not accept data from a computer. Any data being sent is cancelled and not printed.

■On-line

The printer accepts data from a computer.

4. Select a printer language to set a print mode.

5 Set each item.

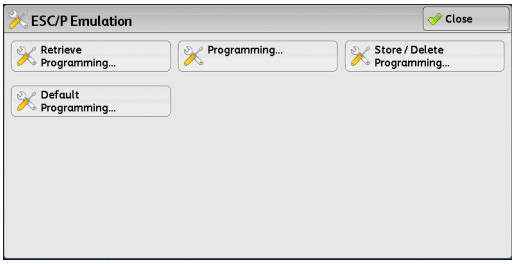

Note

- The items displayed vary depending on the printer language.

Retrieve Programming

You can retrieve and use settings registered in memory.

1 Select [Retrieve Programming].

2 Select the memory number to use.

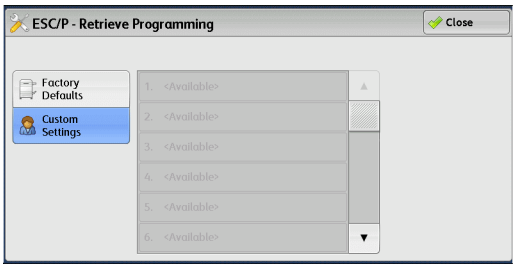

■ Factory Defaults

You can use the factory default settings.

■ Custom Settings

Displays the numbers stored in the memory.

Programming

You can check or change the value set for the print mode item number.

Reference

- For the item numbers that can be configured in each mode menu, refer to "ESC/P-K Emulation Settings" (P.660), "PDF Direct Print Settings" (P.677), "PCL Emulation Settings" (P.683) and "HP-GL/2 Emulation Settings" (P.690).

1 Select [Programming].

2 Enter the item number of the feature to set in [Item Number] with the numeric keypad.

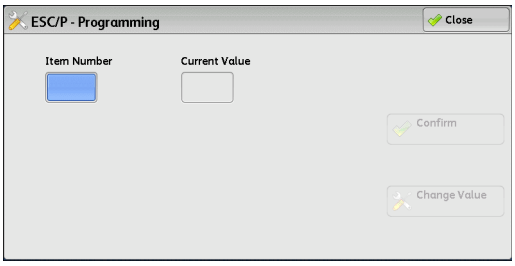

3 Select [Confirm]. The current setting value appears.

4 Select [Change Value].

5 Enter [New Value] with the numeric keypad.

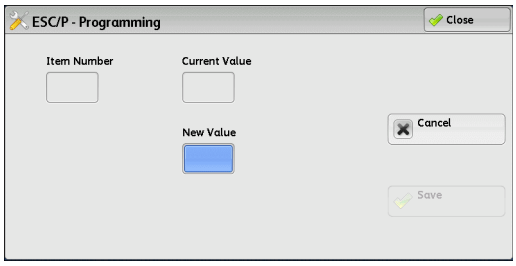

6 Select [Save].

Store/Delete Programming

For ESC/P-K and HP-GL/2 emulations, you can register settings in memory.

You can register up to 20 print modes for ESC/P-K and HP-GL/2 emulations.

1 Select [Store/Delete Programming].

2 Select [Store Current Selections] or [Delete].

■Store Current Selections

Stores the current selections. If you select a number already used, its settings will be overwritten with the new settings. The overwritten settings cannot be restored.

■Delete

Select this to delete a programming.

Important

- Deleted numbers cannot be restored.

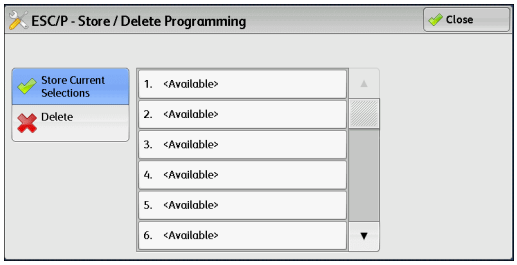

3 Select the memory number to store or to delete.

Default Programming

You can start the machine using the settings stored in memory as default settings.

1 Select [Default Programming].

2 Select [Factory Defaults] or [Custom Settings].

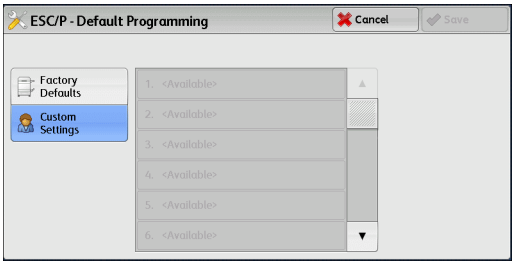

■**Factory Defaults**

You can use the factory default settings.

■**Custom Settings**

Displays the numbers stored in memory.

3 When you select [Custom Settings], select a memory number to use.

4 Select [Save].

Password

For PDF Direct Print, if a password is set for files, set the password here in advance. PDF files can be printed only when the passwords assigned and entered are the same.

You can use up to 32 characters for the password.

1 Press [Password].

2 Enter a password of up to 32 single-byte characters with the keyboard displayed, and select [Save].

Fax Receiving Mode

You can set a mode for receiving faxes.

Note

- As for IP fax (SIP), the machine always receives faxes automatically.

Reference

- For information on auto receive and manual receive, refer to "Fax" > "Receiving Faxes" in the User Guide.

1 Press the <Machine Status> button.

2 Select [Fax Receiving Mode].

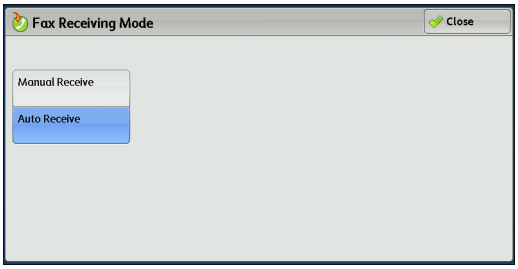

3 Select a fax receiving mode

■ **Manual Receive**

The machine manually receives faxes from a remote machine. This mode is convenient to confirm the sender or use an external telephone before receiving faxes.

■ **Auto Receive**

The machine automatically receives faxes.

4 Select [Save].

Faults

This section describes how to check the information on errors that occurred on the machine.

The error history report shows the list of the latest 50 errors. The items printed include the date and time, error code, and error category.

The following describes how to print the error history report.

1 Press the <Machine Status> button.

2 Select the [Faults] tab.

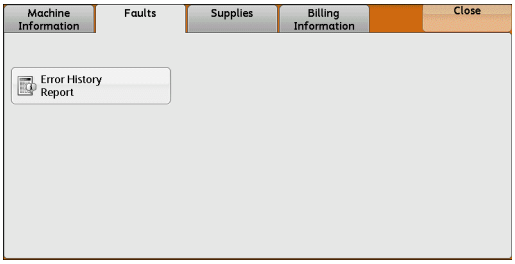

3 Select [Error History Report].

4 Press the <Start> button.

Note

- You can also access [Error History Report] under [Machine Information] > [Print Reports] >[Job Status/Activity Report].
- If [Print Reports Button] under [Reports] is set to [Disabled], the [Error History Report] button does not appear on the screen. For more information on reports, refer to "Reports" (P.164).

Supplies

You can check the status of consumables on the [Supplies] screen. The status of consumables is shown as "OK", "Replace Soon (Order Now)", or "Replace Now".

The following describes the procedure to check the status of consumables.

Reference

- For information on replacing consumables, refer to "Replacing Consumables" (P.78).

1 Press the <Machine Status> button.

2 Select the [Supplies] tab and confirm the status of the toners.

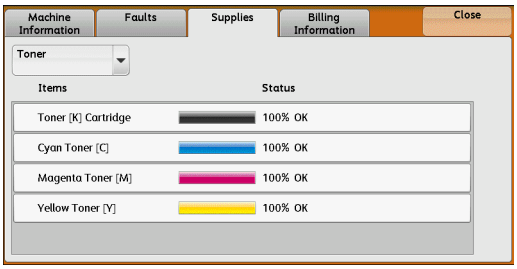

Note

- Pressing a supply name displays a screen about the status of the supply.

3 Select [Other Consumables] from the drop-down menu, and confirm the status of the consumables.

Important

- If you replace a toner cartridge with a partially used toner cartridge, the displayed status may differ from the actual remaining amount. When you replace toner cartridges, we recommend that you use new ones.

Note

- Pressing a supply name displays a screen about the status of the supply.
- The items displayed vary depending on the options installed.

Billing Information

On the [Billing Information] screen, you can check the number of pages printed per meter or user.

The following shows the reference section for each item.

"Billing Information" (P.134)

"User Account Billing Information" (P.135)

1 Press the <Machine Status> button.

2 Select the [Billing Information] tab.

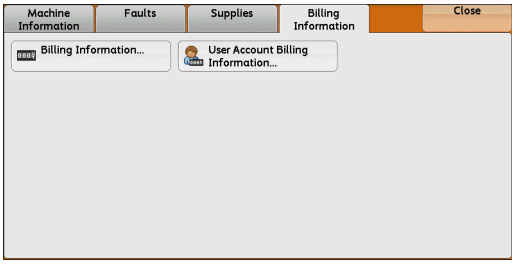

Billing Information

You can check the total number of copies and pages printed by individual meters.

1 Select [Billing Information].

2 On the screen, check each meter.

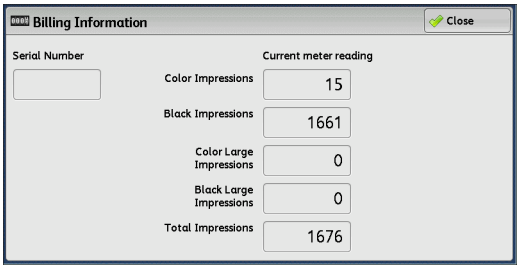

Note

- [Previous meter reading] can be displayed when using EP system. For more information on EP system, refer to "EP System" (P.749).

■ Serial Number

Displays the serial number of the machine.

■ Color Impressions

Displays the total number of pages copied and printed in full color.

■ Black Impressions

Displays the total number of pages copied and printed in black and white,and pages faxed.

■ Color Large Impressions

Displays the total number of pages printed in large-size full color.

■ Black Large Impressions

Displays the total number of pages printed in large-size black and white.

■ Total Impressions

Displays the total number of Color Impressions and Black Impressions.

Note

- When print data resulting from color conversion using an ICC profile, for example, on the application is printed at Auto (Color/B/W), even documents that appear in black-and-white on the monitor are printed in color. In this case, Color Impressions is used for counting the number of prints.

User Account Billing Information

You can check the number of pages printed by user.

Note

- [User Account Billing Information] is displayed when the [Accounting Type] is set to [Local Accounting].

Reference

- For more information on the Auditron mode, refer to "Accounting" (P.145).

1 Press the <Log In/Out> button.

■To check the billing meter of a currently authenticated user ID

1) Enter the user ID with the numeric keypad or the keyboard displayed on the screen, and select [Enter].

   When a password is required, select [Next] and enter the user's passcode, and select [Enter].

2) Press the <Machine Status> button.

■To check the system administrator meter

1) Enter the system administrator's user ID with the numeric keypad or the keyboard displayed on the screen, and select [Enter].

   When a passcode is required, select [Next] and enter the system administrator's passcode, and select [Enter].

Note

- The default user ID is "11111".
- The default passcode is "x-admin".

2) Press the <Machine Status> button.

2 Select the [Billing Information] tab.

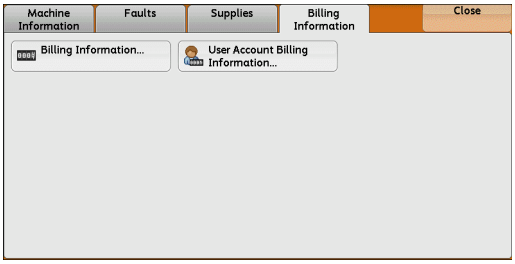

3 Select [User Account Billing Information].

4 Select a meter to check.

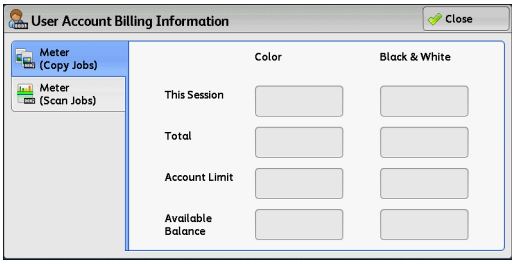

Note

- The meters are displayed only for the features set to [Enable Accounting] in the Auditron mode.

■ Meter (Copy Jobs)

Displays the number of pages copied.

■ Meter (Scan Jobs)

Displays the number of pages scanned.

■ Meter (Print Jobs)

Displays the number of pages printed.

Note

- [Meter (Print Jobs)] is not displayed for the system administrator.

5
Tools

System Settings Procedure

To change or customize the system settings, enter the System Administration mode.

This section describes the basic procedures for system settings.

The following shows the reference section for each procedure.

"Step1 Entering System Administration Mode" (P.138)

"Step2 Entering the System Administrator User ID and Passcode" (P.138)

"Step3 Selecting [Tools]" (P.139)

"Step4 Selecting a Setting Item on the [Tools] Screen" (P.139)

"Step5 Setting a Feature" (P.142)

"Step 6 Exiting System Administration Mode" (P.142)

Step1 Entering System Administration Mode

1 Press the <Log In/Out> button or the login information field on the touch screen.

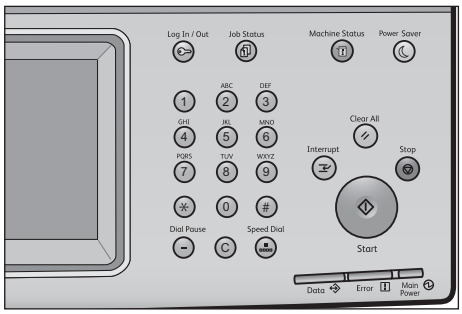

Step2 Entering the System Administrator User ID and Passcode

To enter the system administration mode, enter the system administrator's user ID. If [Passcode Entry for Control Panel Login] is set to [On] under [Tools] > [Authentication/ Security Settings] > [Authentication] > [Passcode Policy], you need to enter the passcode.

We recommend that you change the system administrator's user ID and passcode immediately after installing the machine.

Reference

- For more information on how to change the passcode, refer to "System Administrator Settings" (P.313).

1 Enter the system administrator's user ID with the numeric keypad or the keyboard displayed on the screen, and select [Enter].

When a passcode is required, select [Next] and enter the system administrator's passcode, and then select [Enter].

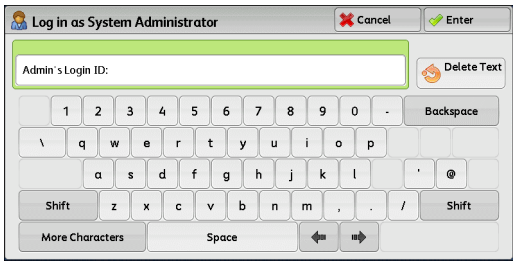

Note

- The default user ID is "11111".
- The default passcode is "x-admin".
- The screen may differ depending on the settings of the machine.
- The <Log In/Out> button is lit when the machine enters the system administration mode.

Step3 Selecting [Tools]

1 Select [Tools] on the Services Home screen.

Note

- When the Services Home screen is not displayed on the touch screen, press the <Services Home> button.

Step4 Selecting a Setting Item on the [Tools] Screen

On the [Tools] screen, select a setting item to set.

Reference

- For the items that can be selected on the [Tools] screen, refer to "Tools Menu List" (P.143)".

1 Select a tab to set.

System Settings

You can set or change the default values of each service.

■ Common Service Settings

Allows you to configure the general settings of the machine.

Reference

- For more information, refer to "Common Service Settings" (P.146).

■ Copy Service Settings

Allows you to configure the copy service settings such as copy feature defaults, copy operation control, and button indications.

Reference

- For more information, refer to "Copy Service Settings" (P.182).

■ Connectivity & Network Setup

Allows you to configure the network related settings such as ports and protocols.

Reference

- For more information, refer to "Connectivity & Network Setup" (P.194).

■ Print Service Settings

Allows you to configure the print service settings such as memory settings and print operation control.

Reference

- For more information, refer to "Print Service Settings" (P.227).

■ Scan Service Settings

Allows you to configure the scan service settings such as scanner defaults and button indications.

Reference

- For more information, refer to "Scan Service Settings" (P.235).

■ Fax Service Settings

Allows you to configure the fax service settings such as setting defaults, fax control and button settings.

Reference

- For more information, refer to "Fax Service Settings" (P.245).

■ E-mail/Internet Fax Service Settings

Allows you to configure the e-mail and Internet fax transmission specifications settings.

Reference

- For more information, refer to "E-mail/Internet Fax Service Settings" (P.262).

■ Address Book Settings

Allows you to configure the Address Book settings.

Reference

- For more information, refer to "Address Book Settings" (P.266).

■ Folder Service Settings

Allows you to configure the settings relating to folders.

Reference

- For more information, refer to "Folder Service Settings" (P.267).

■ Job Flow Service Settings

Allows you to configure the settings relating to Job Flow.

Job flow is a function to execute a series of registered operations.

Reference

- For more information on Job Flow, refer to Job Flow Service Settings(P.269).

■ Media Print Service Settings

Allows you to configure the settings relating to Media Print (Text and Photo).

Reference

- For more information, refer to "Media Print Service Settings" (P.270).

■ Stored File Settings

Allows you to set how to delete files in a folder and print files stored in the machine.

Reference

- For more information, refer to "Stored File Settings" (P.271).

■ Web Browser Setup

Allows you to configure the settings relating to the web browser when accessing a remote destination server.

Reference

- For more information, refer to "Web Browser Setup" (P.274).

Setup

You can create and change folders, job flow sheets, and the Address Book (speed dial numbers).

Reference

- For more information, refer to "Setup" (P.276).

Accounting

You can register users and configure the settings for account administration.

Reference

- For more information, refer to "Accounting" (P.301).

Authentication/Security Settings

You can configure the authentication and security settings.

Reference

- For more information, refer to "Authentication/Security Settings" (P.313).

Step5 Setting a Feature

1 Select any feature.

Note

- Select a submenu from the [Group] list, and then select a feature from the [Features] list.
- Select[▲]or[▼]as required.

2 Select an item to set.

3 After setting the feature, select [Save].

4 Select [Close] repeatedly until the Services Home screen is displayed.

Note

- If rebooting the machine is required to enable the new settings, when you select [Close] in the [Tools] screen, a message may be displayed. Follow the message and reboot the machine. After the machine reboots, it exits from the System Administration mode, and the <Log In/Out> button is unlit.
- When you configure settings under [System Settings] or [Setup] and then press the <Services Home> button, the screen directly goes back to the Services Home screen.

Step 6 Exiting System Administration Mode

1 Press the <Log In/Out> button.

Note

- You can also log out by pressing the login information field on the touch screen, and then selecting [Logout].
- The <Log In/Out> button is unlit when the machine exits from the system administration mode.

Tools Menu List

The following tables list the items that can be set on the [Tools] screen. Note that some items may not appear depending on the configuration of the machine.

System Settings

Common Service Settings

- "Machine Clock/Timers" (P.146)
- "Power Saver Settings" (P.149)
- "Audio Tones" (P.150)
- "Screen/Button Settings" (P.152)
- "Paper Tray Settings" (P.157)
- Image Quality Adjustment(P.162)
- "Reports" (P.164)
- "Maintenance" (P.166)
- "Watermark" (P.170)
- "Force Annotation" (P.172)
- "Print Universal Unique ID" (P.174)
- "Notify Job Completion by E-mail" (P.174)
- "Plug-in Settings" (P.175)
- "Other Settings" (P.175)

Copy Service Settings

- "Copy Tab - Features Allocation" (P.182)
- "Preset Buttons" (P.183)
- "Copy Defaults" (P.183)
- "Copy Control" (P.189)
- "Original Size Defaults" (P.192)
- "Reduce/Enlarge Presets" (P.192)
- "Custom Colors" (P.193)
- "Annotations - Create Comments" (P.193)

Connectivity & Network Setup

- "Port Settings" (P.194)
- "Protocol Settings" (P.200)
- "Machine's E-mail Address/Host Name" (P.205)
- "Proxy Server Settings" (P.206)
- "EP Proxy Server Setup" (P.207)
- "SIP Settings" (P.209)
- "T.38 Settings" (P.212)
- "Outgoing/Incoming E-mail Settings" (P.212)
- "Remote Authentication/Directory Service" (P.214)
- "Security Settings" (P.220)
- "Other Settings" (P.226)

Print Service Settings

- "Allocate Memory" (P.227)
- "Delete Form" (P.229)
- Register Google Cloud Print(P.229)
- Register Google Cloud Print(P.229)

Scan Service Settings

- "Screen Defaults" (P.235)
- "Scan Defaults" (P.236)
- "Scan to PC Defaults" (P.239)
- "Original Size Defaults" (P.240)
- "Output Size Defaults" (P.240)
- "Reduce/Enlarge Presets" (P.241)
- "Other Settings" (P.241)

Fax Service Settings

- "Screen Defaults" (P.245)
- "Fax Defaults" (P.246)
- "Fax Control" (P.248)
- "Fax Received Options" (P.255)
- "Reduce/Enlarge Presets" (P.257)
- "Original Size Defaults" (P.257)
- "Local Terminal Information" (P.258)
- "Internet Fax Control" (P.259)

E-mail/Internet Fax Service Settings

- "E-mail Control" (P.262)

Address Book Settings

- "Address Book Settings" (P.266)

Folder Service Settings

- "Folder Service Settings" (P.267)

Job Flow Service Settings

- "Job Flow Service Settings" (P.269)

Media Print Settings

- "Media Print Service Settings" (P.270)

Stored File Settings

- "Stored File Settings" (P.271)

Web Browser Setup

- "Web Browser Setup" (P.274)

Setup

- "Create Folder" (P.276)
- "Stored Programming" (P.279)
- "Create Job Flow Sheet" (P.279)
- "Create Job Flow Sheet Keyword" (P.288)
- "Add Address Book Entry" (P.289)
- "Create Fax Group Recipients" (P.299)
- "Add Fax Comment" (P.300)
- "Paper Tray Attributes" (P.300)

Accounting

- "Create/View User Accounts" (P.301)
- "Reset User Accounts" (P.305)
- "System Administrator's Meter (Copy Jobs)" (P.307)
- "Accounting Type" (P.307)
- "Accounting Login Screen Settings" (P.308)
- "Fax Billing Data" (P.310)

Authentication/Security Settings

- "System Administrator Settings" (P.313)
- "Authentication" (P.315)
- "Allow User to Disable Active Settings" (P.324)
- "Job Status Default" (P.324)
- "Overwrite Hard Disk" (P.325)

Common Service Settings

"Image Quality Adjustment" (P.162)

In [Common Service Settings], you can make settings relating to the machine's common features.

The following shows the reference section for each item.

"Machine Clock/Timers" (P.146)

"Power Saver Settings" (P.149)

"Audio Tones" (P.150)

"Screen/Button Settings" (P.152)

"Paper Tray Settings" (P.157)

Image Quality Adjustment(P.162)

"Reports" (P.164)

"Maintenance" (P.166)

"Watermark" (P.170)

"Force Annotation" (P.172)

"Print Universal Unique ID" (P.174)

"Notify Job Completion by E-mail" (P.174)

"Other Settings" (P.175)

1 On the [Tools] screen, select [System Settings] > [Common Service Settings].

Reference

- For information on how to display the [Tools] screen, refer to "System Settings Procedure" (P.138)".

2 Select an item to set or change.

Machine Clock/Timers

You can set the machine clock or the time intervals of the machine to reset settings.

Date

Set the date in the system clock of the machine. The date set here will be printed on all lists and reports.

1 Select [Date], and then select [Change Settings].

2 Select a date format.

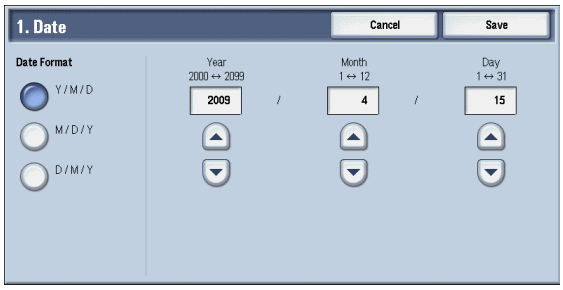

3 Specify [Year], [Month], and [Day].

4 Select [Save].

Time

Set the time in the system clock of the machine, using 12-hour or 24-hour format.

The time set here will be printed on all lists and reports.

1 Select [Time], and then select [Change Settings].

2 Select the time format.

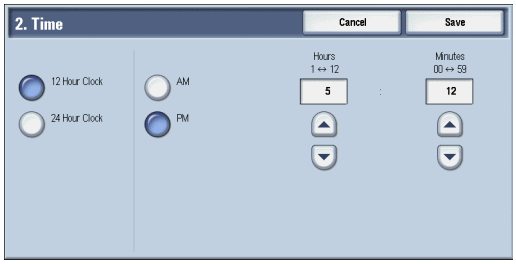

3 When you select [12 Hour Clock], set [AM] or [PM].

4 Specify [Hours] and [Minutes].

5 Select [Save].

NTP Time Synchronization

You can synchronize the machine clock with a time server (NTP: Network Time Protocol), receiving time information from the server.

To connect to a time server, select [On] for [NTP Time Synchronization], and set the IP address of the time server in [Time Server Address].

Connection Interval

Select the time interval to connect to the time server.

You can select from 1 to 500 hours in 1 hour increments.

Time Server Address

Set the server name or IP address of the time server.

Note

- For IPv4, enter the IP address in xxx.xxx.xxx.xxx format, where "xxx" is a value between 0 and 255.
- For IPv6, enter the IP address in xxxx:xxxx:xxxx:xxxx:xxxx:xxxx:xxxx:xxxx format, where "xxxx" is a hexadecimal number.

Auto Clear

Specify the time lapsed without any operation until the machine resets the settings automatically.

When you select [On], specify a value between 10 and 900 seconds in 1 second increments. When you select [Off], the settings are not reset automatically.

Note

- When [Off] is selected, the machine will cancel the standby status and begin processing a document after one minute has elapsed in anticipation of a job command.

Auto Job Release

Specify the time lapsed until the machine cancels the active job and starts the next job if an error such as document or paper jams and running out of paper occurs during copying or scanning. In that case, only those jobs not affected by the error can be processed.

When you select [On], specify a value in 1 minute increments. When you select [Off], the active job is not canceled automatically.

Auto Print

Set the time period to start the next print job after the operation of the control panel (except for the <Start> and <Clear All> buttons) after the end time of the Printer Lockout Duration passed.

When you select [On], specify a value between 1 and 240 seconds in 1 second increments. When you select [Off], printing starts immediately after the machine is ready.

Printer Lockout

You can set the machine to disable printing temporarily.

To use this feature, the [Lock Out Printer] button needs to be displayed on the right side of the Services Home screen.

Reference

- For information on how to display the [Lock Out Printer] button on the Services Home screen, refer to "Customizing the Button Layout" (P.33).
- You can configure detailed settings on CentreWare Internet Services. For more information, refer to the help of CentreWare Internet Services.

■ Allow User to Lock Out

Selecting [Lock Out Printer] on the Services Home screen temporarily disables printing. [Release Printer] is displayed during the printer lockout duration. Selecting [Release Printer] enables printing.

Note

- The printer lockout status is not released automatically even after the end time elapsed. To release the printer lockout status, the control panel operation is required.
- The machine starts printing in accordance with the setting in [Auto Print] when [Release Printer] is selected. Thus the printing may not start just after [Release Printer] is selected.
- When the [Allow User to Lock Out] check box is deselected, [Disable Auto Printing] in [Services Home - Additional Features] is displayed as [(Not Assigned)].

Time Zone

Set the time difference from GMT between -12 and +12 hours.

Note

- GMT stands for Greenwich Mean Time.

Daylight Savings

You can set daylight saving time. During daylight saving time period, the machine moves the clock forward by one hour.

Select from [Adjust Off], [Adjust by Day, Month & Time], and [Adjust by Month, Week, Day of Week & Time].

If you select [Adjust by Day, Month & Time], specify the month, day, and time for [Start Date] and [End Date].

If you select [Adjust by Month, Week, Day of Week & Time], specify the month, week, day of week, and time for [Start Date] and [End Date].

Warmer Mode

Set whether to enable the Warmer mode, which is used to prevent or reduce condensation inside the machine.

Select [Disabled] or [Enabled].

If you select [Disabled], the machine will not enter the Warmer mode. To display a message when condensation may have occurred, select [Condensation Alert].

If you select [Enabled], you can specify [Start Time] and [Duration] for the Warmer mode. To automatically switch the Warmer mode to [Disabled] after a specified period of absence of condensation has elapsed, select [Auto Disabled].

Note

- This feature is for service representative use. For more information, contact our Customer Support Center.
- During operation of the Warmer mode, the machine does not enter the Sleep mode.

Power Saver Settings

You can configure the following settings of Power Saver mode.

Power Saver Timers

The Power Saver mode has two modes: the Low Power and Sleep modes. When a specified period of time has elapsed, the machine switches to these modes in the following order to reduce power consumption.

Last operation on the machine → Low Power mode → Sleep mode

Reference

- For more information on the setting procedure, refer to "Power Saver Mode" (P.23).

Note

- You cannot configure the machine not to switch to the Low Power mode or the Sleep mode.

■ From Last Operation to Low Power Mode

Specify a time period between 1 and 240 minutes in 1 minute increments to enter the Low Power mode after the last operation.

■ From Last Operation to Sleep Mode

Specify a time period between 1 to 240 minutes in 1 minute increments to enter the Sleep mode after the last operation.

Note

- Configure the [From Last Operation to Sleep Mode] time to be same or longer than the [From Last Operation to Low Power Mode] time.
- The machine enters Sleep mode without entering Low Power mode when the [From Last Operation to Low Power Mode] time is same as the [From Last Operation to Sleep Mode] time.

Power Saver Deactivation

Select whether to disable the Power Saver mode fully or partially when exiting the mode.

■ Deactivate All

All devices of the machine exit the Power Saver mode.

■ Deactivate Partially As Required

Only the devices necessary for the operation exit the Power Saver mode.

You can select from [Always On] or [When Printing / Job Auto Processing].

Scheduled Power Off

You can set a time for the machine to be automatically turned off.

■ Disabled

Does not turn off the machine automatically.

■ Enabled

Set a time for the machine to be automatically turned off.

Note

- [Disabled] is set by default.
- Even when [Enabled] is set, the machine will not be automatically turned off during an error (such as paper jam) or processing (such as copying, printing, interruption).

Audio Tones

Select whether to sound an alarm when a job ends or a fault occurs.

Control Panel Select Tone

Set the volume to be sounded when a button on the control panel is correctly selected.

You can select from [Soft], [Normal], and [Loud]. To disable the sound, select [Off].

Control Panel Alert Tone

Set the volume to be sounded when a button that cannot be selected is selected, or an error occurs.

You can select from [Soft], [Normal], and [Loud]. To disable the sound, select [Off].

Base Tone

Set the volume for the base tone of the toggle button, which changes setting each time it is pressed. The machine plays this sound when it exits the Interrupt mode.

You can select from [Soft], [Normal], and [Loud]. To disable the sound, select [Off].

Machine Ready Tone

Set the volume to be sounded when the machine is ready to copy or print, or powered on.

You can select from [Soft], [Normal], and [Loud]. To disable the sound, select [Off].

Job Complete Tone 1, 2

Set the volume to be sounded when a job is completed normally.

You can select from [Soft], [Normal], and [Loud]. To disable the sound, select [Off].

You can select the target jobs to play the sound.

You can select the pitch of the sound.

Fault Tone

Set the volume to be sounded when a job fails.

You can select from [Soft], [Normal], and [Loud]. To disable the sound, select [Off]. You can select the target jobs to play the sound.

Auto Clear Alert Tone

Set the volume to be sounded at five seconds before automatically returning to the initial screen when [Auto Clear] is set to [On].

You can select from [Soft], [Normal], and [Loud]. To disable the sound, select [Off].

Reference

- For information on Auto Clear, refer to "Auto Clear" (P.248).

Alert Tone

Set the volume to be sounded when a fault such as a paper jam occurs, and the job remains in failure state.

You can select from [Soft], [Normal], and [Loud]. To disable the sound, select [Off].

Out of Paper Warning Tone

Set the volume to be sounded when a job is suspended because there is no paper in a tray.

You can select from [Soft], [Normal], and [Loud]. To disable the sound, select [Off].

Low Toner Alert Tone

Set the volume to be sounded when the toner cartridge needs replacing.

You can select from [Soft], [Normal], and [Loud]. To disable the sound, select [Off].

Stored Programming Tone

Set the volume to be sounded while a stored program is being registered.

You can select from [Soft], [Normal], and [Loud].

This tone cannot be disabled.

Stored Programming Complete Tone

Set the volume to be sounded when the call of a stored programming registered is completed.

You can select from [Soft], [Normal], and [Loud]. To disable the sound, select [Off].

Line Monitor Volume

When sending a fax, you can relay the sound on the telephone line until the connection is made through the speakers on the machine. This is convenient for Fax Information Services without using the telephone receiver.

You can select a volume level from [Soft], [Normal], or [Loud]. To disable the sound, select [Off].

Ringing Volume

Set the volume to be sounded when the machine receives a fax.

You can select from [Soft], [Normal], and [Loud]. To disable the sound, select [Off].

Screen/Button Settings

Set screens and buttons.

Screen Default

Set the screen displayed after powering on the machine or canceling the Power Saver mode.

Reference

- For more information on the setting procedure, refer to "Customizing the Control Panel" (P.29).

Screen After Auto Clear

Set the screen displayed after Auto Clear.

Reference

- For more information on the setting procedure, refer to "Setting the Screen After Auto Clear" (P.31).

Auto Display of Login Screen

When the Authentication feature is enabled on the machine, set whether or not to automatically display the login screen after turning on the machine or canceling the Power Saver mode.

Custom Buttons 1 to 3

You can assign services such as Copy and Send from Folder to the custom buttons on the control panel: Custom Button 1 to Custom Button 3.To leave a feature unassigned, select [(Not Set)].

Reference

- For more information, refer to "Assigning Services to the Custom Buttons" (P.72).

One-touch Buttons

Set the number of address numbers that are assigned to the one touch buttons.

■ Type 1

Assigns the one touch buttons 1 to 52 to the address numbers 0001 to 0052, and buttons 53 and 54 to the stored programming jobs 1 and 2.

■ Type 2

Assigns the one touch buttons 1 to 45 to the address numbers 0001 to 0045, and buttons 46 to 54 to the stored programming jobs 1 to 9.

Note

- [Type 1] is selected by factory default.

Services Home

Set the layout of service buttons that appear on the Services Home screen.

Reference

- For more information on how to set the buttons, refer to "Customizing the Button Layout" (P.33).

Services Home - Additional Features

Set the layout of additional feature buttons that appear on the Services Home screen.

Note

- If you do not want to display [Setup] as an additional feature button, select the [Show this in Admin mode] check box. You can set or change settings with the machine only when it is in the System Administration mode.

Reference

- For more information on how to set the buttons, refer to "Customizing the Button Layout" (P.49).

Job Type on Job Status screen

Select the job types to be shown on the [Completed Jobs] screen under the [Job Status] screen that is displayed when the <Job Status> button on the control panel is pressed.

Select from [All Jobs], [Printer & Print from Folder Jobs], [Scan, Fax, & Internet Fax Jobs], or [Job Flow & File Transfer Jobs].

Default Language

You can select the language displayed on the machine.

There are two ways of selecting the language: set in the System Administration mode and set by local users.

- Setting in the System Administration mode

The language set here is the standard language that is retained even when the machine is powered off and on.

- Setting in the local users mode

  The language setting in [Language] in the Services Home screen is lost when the machine is powered off.

Important

- When [English] is selected, only ASCII characters can be used.
- When you set [Language] to [English] on the Services Home screen and an address book entry or contents of [Details] of Job Flow Sheets is entered in double-byte characters, the characters may not be displayed properly.
- When you use CentreWare Internet Services to import a CSV file* including double-byte characters other than a selected language, the characters in the file may be garbled or the import may fail.

  *: CSV (Comma Separated Values) is a file format that is often used for saving data by spreadsheets and database programs.

Screen Brightness

You can adjust the screen brightness of the control panel between -16 and +16.

Reconfirm E-mail Recipient

Select whether or not to display the screen to confirm e-mail recipients when sending e-mails.

Select from [Confirmation Not Required], [Always Reconfirm Recipient], and [Reconfirm if Multiple Recipients].

Reconfirm Fax/Internet Fax Recipient

■ First Tab - Reconfirm Recipients

Select from [Off], [Always Reconfirm Recipient], and [Reconfirm if Multiple Recipients].

■ Start Job at Other Tabs

Select from [Disabled] and [Enabled].

Note

- When you select [Start Disabled], you cannot confirm the e-mail recipients in other Tabs.

■ Reconfirm Recipient at Other Tabs

Select from [Off], [Always Reconfirm Recipient], and [Reconfirm if Multiple Recipients].

Note

- This item is not displayed when you select [Disabled] for [Start Job at Other Tabs].
- [Off] cannot be selected when you select [Reconfirm if Multiple Recipients] for [First Tab - Reconfirm Recipients]. And [Off] and [Reconfirm if Multiple Recipients] cannot be selected when you select [Always Reconfirm Recipient] for [First Tab - Reconfirm Recipients].

Reconfirm E-mail Recipient Button

Set whether or not to display a screen to check available memory when sending e-mails.

Select from [Disabled (Show Memory)] and [Enabled].

Reconfirm Fax/Internet Fax Button

Set whether or not to display a screen to check available memory when sending faxes/ Internet faxes.

Select from [Disabled (Show Memory)] and [Enabled].

Screen After Inserting USB

Select whether or not to display the screen when the machine detects USB memory device insertion, and also select the screen type at the time.

Select from [Off], [Store to USB], [Media Print - Text], [Media Print - Photos], and [Service Selection Screen].

Note

- If you select [Service Selection Screen], the [USB Device Detected] screen is displayed when a USB memory device is inserted. You can select [Store to USB] ,[Media Print - Text], or [Media Print - Photos].
- If a USB memory device is inserted when the machine is switched off, and then you switch on, the Services Home screen is displayed.
- When a USB memory device is inserted into the USB memory slot during the Power Saver mode, the touch screen does not light up. After exiting the Power Saver mode by pressing the <Power Saver> button, insert the USB memory device again or select the feature to be used on the Services Home screen.
- If a commercially available Memory Card Reader is used and it is left inserted all the time, the screen is not switched to the selected screen even when a medium is inserted into the slot of the Memory Card Reader.

Display Consumables Screen

Allows you to select whether or not to display the consumables status when a replacement is required.

■ Off

Does not display the consumables status screen.

■ When power is switched on

Displays the consumables status screen at startup.

■ When Auto Clear is activated

Displays the consumables status screen when Auto Clear is executed.

Keyboard Input Restriction

Allows you to select whether or not to restrict the display of the virtual keyboard of the machine. To prevent characters from being garbled when switching character sets, you can limit input to ASCII characters. If you select [On (ASCII Only)], the keyboard displayed shows ASCII characters only.

Operation of Up/Down Buttons

Allows you to whether or not to enable continuous scrolling when pressing the scroll buttons.

Flick and Double-tap

Set whether or not to operate the machine by flicking and double-tapping. Select from [Disabled] or [Enabled].

Besides the operation method, the design of Services Home Screen and the display effect of the screens vary depending on this setting.

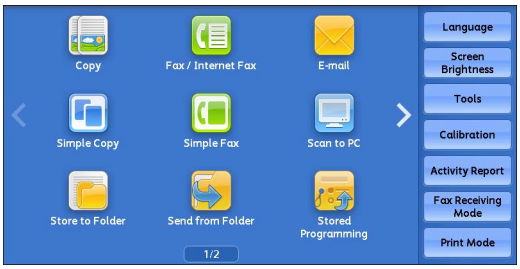

Icon Style

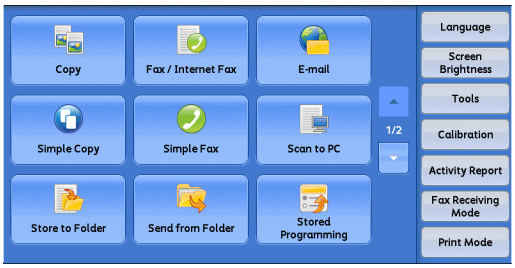

Button Style

Screen		Operation /Display Effect	Enabled	Disabled
Menu		Design	Icon Style	Button Style
		Scroll Direction	Horizontal	Vertical
		Flick to switch pages	O	-
		Drag to switch pages	O	-
Preview	Thumbnail View	Tap to display the entire view	O	O
		Flick to switch pages	O	-
		Drag to switch pages	O	O
	Entire View	Flick to switch pages	O	-
		Tap the previous/next previewed images to switch pages	O	O
		Tap to switch whether to display the page switching buttons or the thumbnailed bar	O	-
		Double-tap to move to enlarged view	O	-
Preview(Continued)	Enlarged View	Flick the enlarged image to move the position to be displayed	O	-
		Drag the enlarged image to move theposition to be displayed	O	O
		Drag the slider to enlarge/ reduce the image size	O	O
		Double-tap to enlarge/reduce the image size	O	-
		Tap to switch whether to display the slider or the thumbnail bar	O	-
		Drag to switch pages	O	-

O:Available -:Not available

Double-Tap Interval

You can set the interval between two taps to be recognized as a double-tap by the machine.

Select from [Shorter], [Default], or [Longer].

Sys. Admin. Settings Security Warning

Set whether or not to display the security warning screen when the default values of system administrator's user ID and passcode are used. The warning screen is displayed when entering the System Administration mode on the control panel or on the CentreWare Internet Services.

Select [Do Not Display Warning Screen] or [Display Warning Screen].

SNMP Configuration Security Warning

Set whether or not to display the security warning screen when the default values of SNMP protocol's community name and authentication password are used. The warning screen is displayed when entering the System Administration mode on the control panel or on the CentreWare Internet Services.

Select [Do Not Display Warning Screen] or [Display Warning Screen].

Note

- You can set the SNMP protocol settings on CentreWare Internet Services. For more information, refer to the help of CentreWare Internet Services.

Important

- To display the online help for CentreWare Internet Services, users need to have the environment to connect to the Internet. The communication fee shall be borne by you.

Global IP Address Security Warning

Set whether or not to display the security warning screen when the Global IP Address is used and [Login Type] is set to [No Login Required]. The warning screen is displayed when entering the System Administration mode on the control panel or on the CentreWare Internet Services.

Select [Do Not Display Warning Screen] or [Display Warning Screen].

Paper Tray Settings

Set the items related to the paper and trays, including the type of paper and tray priority.

Custom Paper Name/Color

You can name Custom Paper Types 1 to 5 which you can select in [Paper Type] and Custom Paper Colors 1 to 5 which you can select in [Paper Color] of [Paper Tray Attributes].

You can use letters, numerals, and symbols of up to 24 characters for each name and color.

For example, you can use a name showing its usage, such as "Color" for colored paper, and "Covers" for bond paper.

Reference

- For information about how to enter characters, refer to "Entering Text" (P.45).

Paper Tray Attributes

You can set the size and type of paper loaded in trays.

Reference

- For more information, refer to "Changing the Paper Settings" (P.72).

■ Change Settings

Select this button, if you change the paper size for the tray or the setting of auto paper selection.

When you load non-standard size paper in a tray, select [Custom Size], and specify the width and length. When you load standard size paper in a tray, select [Auto Detect].

Important

- Align the paper guides against the paper to prevent paper jams or errors. If the machine cannot detect a tray, use Tray 5.

◆ Paper Type

Select the type of paper to load in the trays.

Reference

- For information about paper types available on the machine, refer to "Loadable Quantity and Weight for Supported Paper" (P.48).

◆ Paper Size

When using Trays 1 to 4, you can load both standard size paper and non-standard size paper. When you load non-standard size paper, select [Custom Size], and then set the size in the X (width) direction and in the Y (length) direction. Set the size in X (width) direction between 182 and 432 mm and the Y (length) direction between 140 and 297 mm in 1 mm increments. Select [Auto Detect] to use the standard size paper.

◆ Paper Color

Set the color of paper. The paper color selected here is displayed as the paper color on the [Paper Supply] screen.

◆ Auto Paper Select

Set the condition for Auto Paper selection. When the color mode selected is used, Auto Paper selection is enabled. Select from [All Colors], [Color], and [Black & White].

Automatic tray selection means that a tray containing the appropriate paper is automatically selected by the machine for copying or printing.

Customize Paper Supply Screen

Select whether or not the setting items specified in [Paper Size] or [Auto Paper Select] under [Paper Tray Attributes] are to be displayed on the [Paper Supply] screen.

■ Disabled

Does not display the items specified in [Paper Size].

■ Size Detection

Displays the setting in [Paper Size].

■ Usage (Auto Paper Select)

Displays the setting in [Auto Paper Select].

Paper Tray Attributes on Setup Screen

Select whether or not to display [Paper Tray Attributes] in the [Setup] screen.

This setting allows you to select the size and type of paper without entering the System Administration mode.

Paper Tray Attributes During Loading

Select whether or not to display the [Paper Tray Attributes] screen after the tray is pulled out or inserted in.

This setting applies to Trays 1 to 4. You cannot apply this setting to Tray 5.

Paper Tray Priority

Set the priority of the trays to use when paper of the same size and the same orientation is set in the multiple trays or print data does not include the paper tray information for automatic tray selection.

Auto Paper selection means that a tray containing the appropriate paper is automatically selected by the machine for copying or printing.

This setting applies to Trays 1 to 4. You cannot set this setting to Tray 5.

Note

- When a logical printer is used and if you specify the paper tray with the print driver, this setting will be ignored.

Paper Type Priority

Set the priority of the trays to use when paper of the same size and the same orientation is set in the multiple trays for automatic tray selection.

Auto Paper selection means that a tray containing the appropriate paper is automatically selected by the machine for copying or printing.

You can set Plain paper, Bond paper, Recycled paper, Plain Reload paper, Heavyweight paper, Gloss paper, Heavyweight A paper, Heavyweight B paper, Heavyweight C paper, Heavyweight S paper, and Custom paper 1 to 5.

The paper type setting is prioritized over the paper tray priority settings. If, however, different paper types appear in the same priority sequence, the paper is determined by paper tray priority sequence. The tray containing paper type set to [Auto Paper Off] is not selected by automatic tray selection.

Reference

- For more information about the tray priority sequence, refer to "Paper Tray Priority" (P.159).

Tray 5 - Paper Size Defaults

Select the paper sizes displayed in the [Tray 5] screen in [Paper Supply] when copying with Tray 5.

You can assign the paper size selected here to the buttons for [Standard Size] in the [Tray 5] screen.

If you frequently use non-standard size paper for copying, assigning the paper sizes to the buttons will save your time to specify the size each time. For your convenience, set the commonly used paper sizes in the upper level.

■ A/B Series Size

You can select a paper size from A and B series sizes.

■ Inch Size

You can select a paper size from inch series sizes.

■ Others

You can select a paper size from other sizes.

■ Custom Size

You can enter any size. Set the X width between 98 and 483 mm, and the Y length between 89 and 297 mm in 1 mm increments.

Note

- For envelopes, enter the size with the flap size excluded.

Auto Tray Switching Control

Set the alternative tray or paper when running out of paper loaded in the tray selected.

■ Auto Tray Switching

You can select from [Always Enable], [Enable during Auto Select], and [Enable for Same Paper Type/Color].

When [Enable during Auto Select] is selected, the machine switches the tray when [Auto Select] is selected in the [Copy] screen or [Paper Select] of the print driver.

Note

- The machine does not switch the tray automatically in the following cases:
  - Tray 5 is selected.
  - The tray set as [Auto Paper Off] is selected in [Paper Type Priority].

■ Targeted Paper Type (Copy Jobs)

You can select paper types.

When [According to Priority Assigned] is selected, the paper type is determined according to the settings in [Paper Type Priority]. When selecting [Selected Paper Type Only], you can specify the paper type.

■ Targeted Paper Color (Copy Jobs)

You can target all paper colors or only one paper color.

Image Quality

You can specify the image quality processing method for each of Bond paper, Plain paper, Recycled paper, Plain Reload paper, Heavyweight paper, Heavyweight Reload paper, Extra

Heavyweight paper, Extra Heavyweight Reload paper, Extra Heavyweight Plus paper, Extra Heavyweight Plus Reload paper, and Custom paper 1 to 5.

When copying or printing a document, the machine controls the image quality according to the type of paper set in [Image Quality] and the image quality processing method specified for that type of paper.

The following table shows available settings.

Reference

- For information about paper characteristics and notes, refer to "Loadable Quantity and Weight for Supported Paper" (P.48).

Setting values	Meaning
Plain A (60 - 79 gsm)	Default setting for plain paper. Paper having ream weight of 60 - 79 gsm.
Plain B (60 - 79 gsm)	Normally, do not select this value.
Plain C (60 - 79 gsm)	Default setting for recycled paper. Paper having ream weight of 60 - 79 gsm.
Plain D (80 - 89 gsm)	Paper having ream weight of 80 - 89 gsm.
Plain E (80 - 89 gsm)	Normally, do not select this value.
Plain E (80 - 89 gsm)	Default setting for bond paper. Paper having ream weight of 90 - 105 gsm.
Plain G (90 - 105 gsm)	Normally, do not select this value.
Plain S	For customized settings.
Heavyweight (HW) A (106 - 169 gsm)	Default setting for Heavyweight paper. Paper having ream weight of 106 - 169 gsm.
Heavyweight (HW) B (106 - 169 gsm)	For customized settings.
Heavyweight (HW) C (106 - 169 gsm)	For customized settings.
Heavyweight (HW) S (106 - 169 gsm)	Normally, do not select this value.
Heavyweight A Reload (106 - 169 gsm)?	Default setting for Heavyweight Reload paper. The image quality is suitable for side 2 of the heavyweight A paper.
Heavyweight B Reload (106 - 169 gsm)	For customized settings.
Heavyweight C Reload (106 - 169 gsm)	For customized settings.
Heavyweight S Reload (106 - 169 gsm)	Normally, do not select this value.
Extra Heavyweight (X-HW)A (170 - 256 gsm)	Default setting for Extra Heavyweight paper. Paper having ream weight of 170 - 256 gsm.
Extra Heavyweight (X-HW)B(170 - 256 gsm)	For customized settings.
Extra Heavyweight (X-HW)C(170 - 256 gsm)	For customized settings.
Extra Heavyweight (X-HW)D(170 - 256 gsm)	For customized settings.
Extra Heavyweight (X-HW)S(170 - 256 gsm)	Normally, do not select this value.

Setting values	Meaning
Extra Heavyweight (X-HW)AReload (170 - 256 gsm)	Default setting for Extra Heavyweight Reload paper. The image quality is suitable for side 2 of the Extra Heavyweight A paper.
Extra Heavyweight (X-HW)BReload (170 - 256 gsm)	For customized settings.
Extra Heavyweight (X-HW)CReload (170 - 256 gsm)	For customized settings.
Extra Heavyweight (X-HW)DReload (170 - 256 gsm)	For customized settings.
Extra Heavyweight (X-HW)SReload (170 - 256 gsm)	Normally, do not select this value.

Image Quality Adjustment

You can set the image quality and calibration settings.

Image Quality

You can select the image quality processing method when the machine scans a document.

■ Photo & Text Recognition

Allows you to change a level with which the machine determines a document as text or photos. This setting is used when you select [Photo & Text] for [Original Type] on the [Image Quality] screen.

Selecting [More Text] enables the machine to easily recognize very fine print as text.

Selecting [More Photo] enables the machine to easily recognize halftone images from newspapers and advertisements as photos.

■ Output Color Recognition

Allows you to change a level from the five levels with which the machine determines a document as monochrome or color. This setting is used when you select [Auto Detect] for [Output Color] on the [Copy] screen.

Selecting [More Black & White] enables the machine to easily recognize monochrome documents.

Selecting [More Color] enables the machine to easily recognize color documents.

■ Photo Reproduction Level

When copying with [Original Type] in the [Image Quality] screen set to [Photo & Text], you can adjust the color reproduction level in the areas determined by the machine as photos.

Selecting [More Text] yields a bold copy effect, emphasizing the dense parts of an image.

Selecting [More Photo] soften the image gradation of the photo aspects of an image, enhancing the reproducibility of subtle colors.

■ Photo Image Quality

[Photo Image Quality] is valid when [Photo] is selected for [Original Type] on the [Image Quality] screen.

Selecting [High Speed] copies a document without reducing the processing speed.

Selecting [High Quality] creates a near-quality reproduction of the document.

Note

- Selecting [High Quality] may reduce the copy speed.

■ Background Suppression (Color Copy)

Set the method of background suppression to be used when making color copies.

Background suppression is the function to detect the density of colors and suppress the scan of background colors when a document has background colors on colored paper.

Select [High Speed] to sample a section of the document and detect the background color.

Select [High Quality] to conduct a pre-scan, and sample the whole document to detect the background color.

Important

- When you select [High Quality], and [Corner Shift] is selected in [Image Shift] with a ratio of 60% or less is specified in [Reduce/Enlarge], a part of the image may not be printed or blank paper may be output.

■ Background Suppression (Black Copy)

Set the method of background suppression to be used when making monochrome copies.

Background suppression is the function to detect the density of colors and suppress the scan of background colors when a document has background colors on colored paper.

Select [High Speed] to sample a section of the document and detect the background color.

Select [High Quality] to conduct a pre-scan, and sample the whole document to detect the background color.

Important

- When you select [High Quality], and [Corner Shift] is selected in [Image Shift] with a ratio of 60% or less is specified in [Reduce/Enlarge], a part of the image may not be printed or blank paper may be output.

■ Background Suppression (Scan Jobs)

Set the method of background suppression to be used for scan operations.

Set how the machine detects density and deletes the background color.

Select [High Speed] to sample a section of the document and detect the background color.

Select [High Quality] to conduct a pre-scan, and sample the whole document to detect the background color.

■ Image Enhancement

Allows you to select whether to carry out image enhancement. If you select [On], the machine gives the image a smoother appearance when printed.

Calibration

When color gradation of a printed image shifts, you can calibrate the color of the image to maintain the image quality of the machine at a certain level.

Reference

- For more information, refer to "Executing Calibration" (P.103).

Note

- If you cannot calibrate the machine to adjust for a shift in color gradation despite the periodic calibration, contact our Customer Support Center.

■ Screen Type

Select from [Copy Job], [Print Job 1], and [Print Job 2].

Reference

- For more information about screen type, refer to "Executing Calibration" (P.103).

■ Paper Supply

Select a tray.

■ Target

Select from [Copy & Print Jobs], [Copy Jobs Only], [Print Jobs Only], and [None].

Adjust Color Registration

You can adjust color registration if colors are misaligned in outputs.

Selecting [Start] starts color registration.

Important

- Do not execute color registration continuously. Doing so may impair the performance of the machine.

Reports

You can configure settings related to printing reports.

Print Reports Button

Set the display method of [Print Reports] under the [Machine Information] screen and [Error History Report] under the [Faults] screen displayed by pressing the <Machine Status> button.

If you select [Disabled], the [Print Reports] button under [Machine Information] and the [Error History Report] button under [Faults] are displayed only in the System Administration mode.

If you select [Disabled], the [Print Reports] button under [Machine Status] > [Machine Information] and the [Error History Report] button under [Faults] are displayed only in the System Administration mode.

Reference

- For information on Print Reports, refer to "Print Reports" (P.115).
- For information on Error History Reports, refer to "Faults" (P.132).

Job History Report

Select whether or not to automatically print a Job History Report when a total of 50 jobs have been processed. All jobs are automatically listed on the printed report.

Reference

- For information on how to print a Job History Report manually, refer to "Print Reports" (P.115).

Activity Report

Select whether or not to automatically print an Activity Report when a total of 100 communication results have been accumulated.

Reference

- For information on an Activity Report, refer to "Activity Report" (P.746).
- For information on how to print an Activity Report manually, refer to "Job Status/Activity Report" (P.115).

Transmission Report - Job Undelivered

Select whether or not to automatically print a Transmission Report - Job Undelivered.

Transmission Report - Job Deleted

Select whether or not to automatically print a Transmission Report - Job Deleted for a cancelled document.

Folder Report

Select whether or not to automatically print a Folder Report.

Broadcast/Multi-Poll Report

Select whether or not to automatically print a Broadcast Report and a Multi-Poll Report.

■ Off

Does not print a report regardless of the data transmission result.

■ On

Automatically prints a report regardless of the data transmission result.

■ Print only when communication error

Prints a report only when a communication error occurs.Select [All communications] or [Communication with error only] for report contents.

Scan File Transfer Report

Select whether or not to print the report for data transmission results when the scanned data is transferred to the computer on the network or is sent via e-mail.

■ Off

Does not print a report regardless of whether data transmission is successfully completed or not.

■ On

Automatically prints a Transmission Report when data is sent successfully and a Transmission Report - Job Undelivered when data transmission failed.

■ **Print when delivery fails**

Prints a Transmission Report - Job Undelivered when the data transmission failed.

Scan File Transfer Report (Fax Server)

Set whether or not to print a Transmission Report after scanned data is sent using the Server Fax feature.

Reference

- This feature does not appear for some models. An optional component is required. For more information, contact our Customer Support Center.

■ **Off**

Does not print a report regardless of whether data transmission is successfully completed or not.

■ **On**

Automatically prints a Transmission Report for a successful transmission and a Transmission Report (undelivered) for a transmission failure.

■ **Print when delivery fails**

Prints a Transmission Report (undelivered) for a transmission failure.

2 Sided Report

Select whether or not to print a report on one side of the paper or both sides when printing a report/list.

Activity Report - Recipient

Select how the information on recipients is shown when printing an Activity Report: the first 40 characters or the last 40 characters.

Job Flow Error Report

Select whether or not to automatically print a Job Flow Error Report.

Maintenance

You can initialize or delete data from the hard disk of the machine.

EP Diagnostic Request/Repair Request

When the EP system via the Internet is used, the machine contacts our Customer Support Center if a check or maintenance is required. Our service representative visits your place as required.

Note

- The EP system is not available in some region. For more information, contact our Customer Support Center.

Reference

- For more information on the EP system, refer to "EP System" (P.749).

Check EP Connection

This feature is used to check whether or not the communications between the machine and our Customer Support Center function normally when the EP system via the Internet is used.

Note

- The EP system is not available in some region. For more information, contact our Customer Support Center.

Reference

- For more information on the EP system, refer to "EP System" (P.749).

EP Registration

■ BB Registration

Select [BB Registration] and then select [Start] to register the machine in EP system.

■ EPA Server Registration

After the BB registration, [EPA Server Registration] is automatically selected in accordance with your environment. When this feature is selected, enter the destination server IP of your EPA server and then select [Start] to register the machine in the EPA server.

Initialize Hard Disk

Initializes the hard disk.

Data deleted by initialization includes supplementary fonts, ESC/P, and HP-GL/2 forms.

Note

- The secure print documents and logs are not erased.

Delete All Data

This feature is designed to prevent the leakage of confidential information of a customer when the machine is returned to Fuji Xerox. All data stored on the machine will be deleted. Before executing the operation, make sure that the operation is absolutely necessary.

Important

- It takes several minutes to several hours to delete all data. (The time taken depends on the machine configuration or the hard disk capacity.)

Software Options

This feature is for service representative use. For more information, contact our Customer Support Center.

Software Upgrade

When EP system via the Internet is used, this feature is used to upgrade the software for EP system when the version upgrade is required.

You can specify when to start the software upgrade.

Important

- After the downloading is finished, the machine automatically restarts and upgrades the software. After the machine restarts again and the Services Home screen is displayed, the software upgrade is completed.

Note

- EP system may not be available in your region. For more information, contact our Customer Support Center.
- To use this feature, a dedicated contract is needed in addition to a use of the EP system service. For more information, contact our Customer Support Center.

Reference

- For information on EP system, refer to "EP System" (P.749).

1 Select [Software Upgrade].

■ Start Upgrade

Starts a version upgrade soon.

■ Schedule Upgrade

Select [On] and specify the date and time to start a version upgrade.

Power on Self Test

Set whether or not to perform self test when the machine is turned on and started up.

If any abnormal condition such as intentional program modification is found during the program diagnosis, the machine stops starting up and records the information in the audit log.

Note

- The information may not be recorded in the audit log depending on the status of program malfunction.
- If the machine does not start, contact our Customer Support Center.

Check Smart Card Details

When you select [Check Smart Card Details] and touch your smart card to the smart card reader, the information of the smart card appears on the touch screen.

Note

- You can register the authentication information using CentreWare Internet Services. For more information, refer to the help of CentreWare Internet Services.

Important

- To display the online help for CentreWare Internet Services, users need to have the environment to connect to the Internet. The communication fee shall be borne by you.

Finisher Adjustment

This feature is displayed only when the Finisher-B1 (optional), the Booklet Maker Unit for Finisher-B1 (optional), or the Hole Punch Unit (optional) is installed.

■ Hole Punch Tool

Specify either [2/4 Hole Punch] or [2/3 Hole Punch (US Specification)].

■ Adjust Punch Position/Booklet Fold Position

Set the punch position and booklet fold position for paper smaller than B4 or larger than or equal to B4.

Adjust Image Transfer

You can specify the transfer output value for each paper type. This is useful when the toner image does not transfer to the paper properly.

Reference

- For more information, refer to "Adjust Image Transfer" (P.654).

Adjust Paper Registration

Allows you to adjust the print image position vertically and horizontally on the paper using [Lead / Side Registration]. Also allows you to adjust the perpendicularity of the image using [Perpendicularity].

You can enter from -2.0 to +2.0 for [Lead / Side Registration], and from -1.0 to +1.0 for [Perpendicularity]. Select [Adjust] after entering the values.

When you enter the amount in [Number of Sheets] and select [Sample Printout], the machine prints the sample that the values changed are reflected.

Delete All Certificates/Initialize Settings

Deletes all certificates stored in the machine and initializes the security settings associated with certificates. This feature is designed to use when you cannot use a certificate data in the machine because of an abnormality of certificate file even when the certificate is set to enabled for [SSL/TLS Settings] under [Tools] > [System Settings] > [Connectivity & Network Setup] > [Security Settings].

Quick Setup Home

Displays Install Wizard which requires configuring the items necessary when installing the machine.

You can configure Screen/Button Settings, IP Address Settings, and Fax Settings.

Reference

- For more information on setting items, refer to "Screen/Button Settings" (P.152), "Connectivity & Network Setup" (P.194), and "Fax Service Settings" (P.245).

Process Control Setup

Automatically adjusts the density deviation when lowering of the density reproducibility occurs on copying or printing.

Spots/Streaks Diagnostics

This feature provides the diagnosis of a spot-like or streak-like defect in a printed image by printing the diagnostic chart and scanning it. The diagnosis result, which is not displayed in the machine, is sent to our Customer Support Center by pressing [EP Diagnosis] when the machine is connected to the EP system.

■ Print Diagnostic Chart

Prints the diagnostic chart. Select the paper and select [Print].

■ **Scan Chart with Document Feeder**

Scans the sample chart using the document feeder. Set the sample chart with the print side facing up as instructed on the screen, and select [Scan]. After the sample chart is scanned, select [Start Diagnostic]. Then the diagnosis is started.

■ **EP Diagnosis**

When the EP system is connected to the Internet, Pressing [EP Diagnosis] sends the diagnosis to our Customer Support Center. Our service representative visits your place as required.

Watermark

Watermark is the function to print text or background pattern on the whole page to inhibit the replication of documents.

You can configure Watermark settings such as date or text, background pattern, and watermark to embed.

Date Format

Set the format for printing dates. This setting is common to Annotation, Watermark, and Force Annotation.

Three formats are available: "YYYY/MM/DD", "MM/DD/YYYY", and "DD/MM/YYYY".

Default Watermark Effect

Set the default type of text effect for Watermark.

■ **Off**

A text effect is not applied.

■ **Embossed**

When you re-copy a copied document with watermark, the text hidden in the background is printed as embossed text.

■ **Outline**

When you re-copy a copied document with watermark, the text hidden in the background is printed as white cutout.

Default Watermark

Set watermark text.

You can select text from [Copy Prohibited], [Copy], [Duplicate], and the strings assigned to Custom Watermark 1 to 3.

Reference

- For more information about custom text, refer to "Custom Watermark 1 to 3" (P.172).

Font Size

Set the size of the text to be printed as the Watermark.

You can set the font size from 24 to 80 points in 1 point increments.

Background Pattern

Set the background pattern to embed the text for the Watermark effect.

You can select from eight patterns: [Wave], [Circle], [Stripe], [Chain], [Beam], [Rhombic], [Sunflower], and [Fan].

Font Color

Specify a hidden text color used for the Watermark feature.

You can select from [Black], [Magenta], and [Cyan].

Note

- The hidden text color in fax transmission is black, regardless of the font color.

Density

Select the text density of the Watermark.

You can select from [Lighten], [Normal], and [Darken].

Watermark/Background Contrast

Set a contrast level for text and background for the Watermark.

You can select a level from 1 to 9. Select a contrast level, referring to the printed samples by selecting [Print this Sample List].

Force Watermark - Copy

Set whether or not to forcibly use the Watermark feature when copying a document. When you select [On], the setting of [Watermark] in the [Output Format] screen is fixed to [On] and you cannot change the setting.

The user control number, machine ID, and date and time are printed.

Note

- You can authorize a user to temporarily cancel the force watermark printing. For more information, refer to "User Roles and Authorization Groups" (P.424).
- The user control number may not be printed depending on the Login mode configuration.

Force Watermark - Client Print

Set whether or not to forcibly use the Watermark feature when printing from a computer.

To prioritize the settings in the machine, select [Allow Device Settings to Override], and to prioritize the settings of the software such as TrustMarkingBasic (sold separately) or the print server, select [Allow Client Settings to Override].

When you [Allow Device Settings to Override] is selected, the user Details or the user control number, machine ID, and date and time are printed.

Note

- The user control number may not be printed depending on the Login mode configuration.

Force Watermark - Print Stored File

Set whether or not to forcibly use the Watermark feature when printing from a folder.

The user control number, machine ID, and date and time are printed.

Note

- You can authorize a user to temporarily cancel force watermark printing. For more information, refer to "User Roles and Authorization Groups" (P.424).
- The user control number may not be printed depending on the Login mode configuration.

Force Watermark - Media Print

Set whether or not to use the Watermark feature when printing for Media Print - Text and Photos.

The user control number, machine ID, and date and time are printed.

Note

- You can authorize a user to temporarily cancel force watermark printing. For more information, refer to "User Roles and Authorization Groups" (P.424).
- The user control number may not be printed depending on the Login mode configuration.

Custom Watermark 1 to 3

Register text to be printed as the Watermark. You can enter up to 32 single-byte characters. The registered text is displayed at [Default Watermark].

Reference

- For information about how to enter characters, refer to "Entering Text" (P.45).

Print this Sample List

Prints hidden text samples of various densities. Select [Watermark/Background Contrast], referring to the printed samples.

Force Annotation

The string such as a user name and a date (Annotation) is forcibly printed out according to the layout template associated with each job type.

The layout templates, Preset 1 to Preset 4, are provided with the machine. The printed items with the templates as follows:

- Preset 1 and Preset 2

  The string registered on [Create Text String 1] is printed as watermark at an angle in the center of paper.

  The following items are printed at the bottom right for Preset 1 or bottom left for Preset 2 of paper.

  - First line: file name and the IP address of the computer that send a print job

- Preset 3 and Preset 4

  The string registered on [Create Text String 1] is printed as watermark at an angle in the center of paper.

  The following items are printed at the bottom right for Preset 3 or bottom left for Preset 4 of paper.

- User ID and date and time

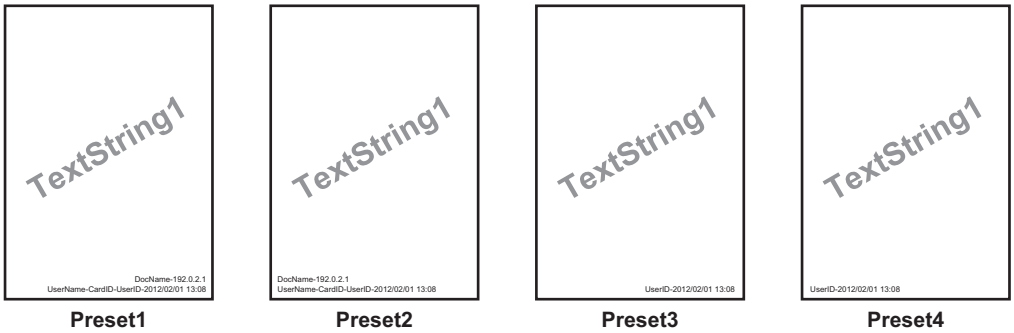

Note

- Some items may not be printed depending on the job type and performance conditions.
- Force annotation is not printed on blank paper generated by the machine.
- A time printed as a watermark using the Force Annotation feature may differ from the time the print job is submitted depending on the status and settings of the machine and the contents of the print job. In this case, the print job start time is printed as a watermark.

Reference

- For information about how to enter characters, refer to "Entering Text" (P.45).

Apply Layout Template to Copy/Print Jobs

Set the association between jobs and layout templates. You can associate layout templates with the following jobs.

- Copy
- Client Print
- Print Stored File
- Media Print
- Print Fax
- Print E-mail
- Report

Note

- You can associate a layout template with Client Print when a print job is sent from a computer.

Delete Layout Template

Deletes a layout template.

Important

- The provided layout templates, Preset 1 to Preset 4, cannot be deleted.

Create Text String

Register text strings for the Force Annotation feature. You can register up to eight types of strings in [Create Text String 1] to [Create Text String 8]. You can enter up to 64 single-byte characters.

Important

- The available text for the provided layout templates, Preset 1 to Preset 4, is the text strings registered in [Create Text String 1].

Print Universal Unique ID

You can print UUIDs (Universal Unique IDs) for each print job to identify each job.

The printed UUIDs can be used as a search key to retrieve print job logs using an application, such as ApeosWare Log Management (sold separately) or ApeosWare Accounting Service (sold separately). Retrieving the image log with the UUID enables you to verify "when", "by whom", and "with what service" the document was processed. This prevents leakage of confidential information.

Note

- You can authorize a user to temporarily cancel force watermark printing. For more information, refer to "User Roles and Authorization Groups" (P.424).
- If a layout template is specified in [Apply Layout Template to Copy/Print Jobs] under [Force Annotation], UUIDs are overlapped with the text on the layout template.

Reference

- For details on Force Annotation, refer to "Force Annotation" (P.172).

Print Universal Unique ID

Select whether or not to print Universal Unique IDs.

Print Position

Select a print position from six positions: [Top Left], [Bottom Left], [Top Center], [Bottom Center], [Top Right], or [Bottom Right].

Print Position Adjustment

Adjust print positions vertically and horizontally from 0 to 100 mm and from 0 to 200 mm respectively, in 0.5 mm increments.

Note

- 0 mm is at the edge of paper. Increasing the value moves the print position toward the center of the paper. However, for [Top Center] or [Bottom Center], the horizontal value for the center of paper is set to 100 mm. Therefore, when you select [Top Center] or [Bottom Center], set the value to 100 mm and then specify desired value.

Print Position (Side 2)

Select the position to print the UUID on Side 2 from [Same as Side 1] or [Mirror Side 1] when making 2 sided copies.

Notify Job Completion by E-mail

You can receive the results of jobs performed by an e-mail notification.

Targeted Jobs

Select the service whose job result you want to receive by an e-mail notification. When the target job is already selected, [Selected] is displayed.

You can select more than one target job from [Copy], [Fax], [Scan], [Print], or [Report].

Select the notification timing from [Notify at the End of Job] or [Notify when Error Only].

When [Fax] is selected as one of the targeted jobs, [Attach Faxed Images] setting becomes available. The specified pages of faxed images converted to PDF format will be attached to notification e-mail. Select [First Page Only], [First 2 Pages], [All Pages], or [Do Not Attach].

E-mail Addresses 1 to 5

Specify the e-mail addresses to notify the result of the jobs.

Note

- When you select [Save] to exit this screen without specifying an e-mail address, the setting of [Targeted Jobs] or [E-mail Message] is deleted.

E-mail Message

Enter a comment attached to the e-mail.

Plug-in Settings

You can browse list of available Plug-ins when you use the custom authentication and set to switch Plug-ins.

Note

- This item is displayed when the Extensible Customization Function is set to be enabled.

Embedded Plug-ins

Set whether or not to use the embedded plug-ins. Select [Enabled] or [Disabled].

List of Embedded Plug-ins

Display the embedded plug-in name and status on the list.

Other Settings

You can configure other settings related to the machine.

Fax Service

Switches between the Fax feature and the Server Fax feature.

Note

- This feature does not appear for some models. An optional component is required. For more information, contact our Customer Support Center.
- The Fax and Server Fax features cannot be enabled at the same time.

Scan to Fax

Allows you to use the Fax feature on the machine.

Scan to Fax Server

Allows you to use the Server Fax feature on the machine.

Note

- This feature does not appear for some models. An optional component is required. For more information, contact our Customer Support Center.

Offset Stacking (Center Tray)

Offsetting means that each set of copies is delivered to the center tray and shifted slightly to separate it from the previous job. When a set of copies is delivered to the front of the

tray, the next set is delivered to the rear of the tray. Set the offset function for the Center Tray - Lower.

Select from [No Offset], [Offset per Set], and [Offset per Job]. When [Offset per Set] or [Offset per Job] is selected, the machine slightly shifts the output position per set or per job (print job) respectively.

Offset Stacking (Center Tray - Lower)

Offsetting means that each set of copies is delivered to the center tray and shifted slightly to separate it from the previous job. When a set of copies is delivered to the front of the tray, the next set is delivered to the rear of the tray. Set the offset function for the Center Tray - Lower.

Select from [No Offset], [Offset per Set], and [Offset per Job]. When [Offset per Set] or [Offset per Job] is selected, the machine slightly shifts the output position per set or per job (print job) respectively.

Offset Stacking (Right Middle Tray)

Offsetting means that each set of copies is delivered to the finisher tray and shifted slightly to separate it from the previous job. When a set of copies is delivered to the front of the tray, the next set is delivered to the rear of the tray. Set the offset function for the Right Middle Tray.

Select from [No Offset], [Offset per Set], and [Offset per Job]. When [Offset per Set] or [Offset per Job] is selected, the machine slightly shifts the output position per set or per job (print job) respectively.

Note

- This feature may not be available depending on the model or your machine configuration. For more information, contact out Customer Support Center.

Booklet Offset

When [Offset Stacking (Center Tray)] or [Offset Stacking (Right Middle Tray)] is set to [Offset per Set], the paper is output to the tray by being slightly displaced by set. If, however, [Fold & Staple] is selected for booklet settings, the paper is not output by set.

Note

- This feature does not appear for some models. An optional component is required. For more information, contact our Customer Support Center.

Extra Center Tray

Allows you to select whether or not to use the Extra Center Tray. Select from [Not Installed] and [Installed].

Auto Job Promotion

You can select whether or not to allow another job to automatically bypass the current job when the machine is unable to start an operation for a any reason, (for example, running out of paper in a tray when starting copying or printing).

Select [Disabled] or [Enabled]. When [Enabled] is selected, you can select whether or not to delete the bypassed jobs automatically. Select [Yes] to specify the period of time until a bypassed job is deleted between 1 minute and 120 hours.

Note

- Stored documents such as Secure Print and Sample Set documents cannot be used with the Auto Job Promotion feature.
- When [Enabled] is selected and there is a job bypassed because of paper out, a message stating the reason of the job promotion appears. The job bypassed can be processed after you take proper measures by following the instruction of the message. Or, you can cancel the job by pressing the <Clear All> button. When multiple jobs are bypassed, a screen that lists the bypassed jobs appears. This screen allows you to display the details screen and to delete the jobs.
- When you have specified the time period to disable print jobs, the jobs received during the specified time period is not deleted automatically even when you have selected [Yes] for [Automatically Delete Held Jobs].

  For more information on the setting to disable print jobs, refer to "Printer Lockout" (P.148).

Default Print Paper Size

You can set the paper size, A4 or 8.5 X 11" to print reports and/or lists.

Odd Page 2 Sided

You can specify whether or not to add a blank page when a document containing an odd number of pages is printed in 2-sided.

Paper Size Settings

You can specify the size of paper to be automatically detectedwhen you use standard sizes of a document or the machine is set to detect sizes of a document.

Refer to the following tables for a combination of sizes that can be detected automatically.

Paper size group	A/B series (8 x 13")			A/B series			A/B series (8K/16K)			A/B series (8 x 13"/8 x 14")			Inch series		
Loading position/ Size orientation	Document glass	Document feeder	Trays 1 to 4	Document glass	Document feeder	Trays 1 to 4	Document glass	Document feeder	Trays 1 to 4	Document glass	Document feeder	Trays 1 to 4	Document glass	Document feeder	Trays 1 to 4
A6	O	X	X	O	X	X	O	X	X	O	X	X	O	X	X
A5	O	O	O	O	O	O	O	O	O	O	O	O	O	X	O
A5	O	X	X	O	O	X	O	O	X	O	X	X	O	X	X
A4	O	O	O	O	O	O	O	O	O	O	O	O	O	O	O
A4	O	O	O	O	O	O	O	O	O	O	O	O	O	O	O
A3	O	O	O	O	O	O	O	O	O	O	O	O	O	O	O

Paper size group	A/B series (8 x 13")			A/B series			A/B series (8K/16K)			A/B series (8 x 13"/8 x 14")			Inch series		
Loading position/ Size orientation	Document glass	Document feeder	Trays 1 to 4	Document glass	Document feeder	Trays 1 to 4	Document glass	Document feeder	Trays 1 to 4	Document glass	Document feeder	Trays 1 to 4	Document glass	Document feeder	Trays 1 to 4
B6	O	X	X	O	X	X	O	X	X	O	X	X	O	X	X
B6	X	X	X	X	X	X	X	X	X	X	X	X	X	X	X
B5	O	X	O	O	O	O	O	O	O	O	X	O	O	X	O
B5	O	O	X	O	O	O	O	O	O	O	O	X	O	O	X
B4	O	O	O	O	O	O	O	O	O	O	O	O	O	O	O
5.5 x 8.5"	X	X	X	X	X	X	X	X	X	X	X	X	X	X	X
5.5 x 8.5"	O	O	X	X	X	X	X	X	X	O	O	X	O	O	X
7.25 x 10.5"	X	O	O	X	X	X	X	X	X	X	O	O	X	O	O
8 x 10"	X	X	X	X	X	X	X	X	X	X	X	X	X	X	X
8 x 10"	X	X	X	X	X	X	X	X	X	X	X	X	X	X	X
8.5 x 11"	O	O	O	X	O	O	X	O	O	O	O	O	O	O	O
8.5 x 11"	O	O	O	X	O	O	X	O	O	O	O	O	O	O	O
8.5 x 13"	X	O	O	X	X	O	X	X	O	X	O	O	X	O	O
8.5 x 14"	X	X	O	X	X	O	X	X	O	X	X	O	X	X	O
11 x 17"	O	O	O	X	O	O	X	O	O	O	O	O	O	O	O
12 x 18"	X	X	X	X	X	X	X	X	X	X	X	X	X	X	X
SRA3	X	X	X	X	X	X	X	X	X	X	X	X	X	X	X
16K(Taiwan)	X	X	X	X	X	X	X	X	X	X	X	X	X	X	X
16K(Taiwan)	X	X	X	X	O	O	X	O	O	X	X	X	X	X	X
8K(Taiwan)	X	X	X	X	O	O	X	O	O	X	X	X	X	X	X
16K (mainland China)	X	X	X	X	X	X	X	X	X	X	X	X	X	X	X
16K (mainland China)	X	X	X	X	O	O	X	O	O	X	X	X	X	X	X
8K (mainland China)	X	X	X	X	O	O	X	O	O	X	X	X	X	X	X

Millimeters/Inches

Allows you to select unit of measurement displayed on the screen from [Millimeters] or [Inches].

Encryption Key for Confidential Data

Allows you to set an encryption key to encrypt confidential information such as the passcode of the system administrator and a folder. Encrypting confidential information prevents a network hacking and an unauthorized access to the information.

Enter an encryption key of 4 to 12 single-byte characters using alphanumeric characters.

Important

- If you change the existing encryption key, you may not restore confidential information from a backup.

Note

- The factory default encryption key is "x-admin".

1. Select [Encryption Key for Confidential Data], and then [Change Settings].
2. Select [New Encryption Key], and enter an encryption key, and then select [Save].
3. Select [Re-enter Encryption Key], enter the same encryption key, and then select [Save].
4. Select [Save] to display a confirmation screen. Select [Yes] on the screen to save the setting.

Service Rep. Restricted Operation

Allows you to select whether or not to restrict the operation by our service representative to protect the security settings from being altered by someone impersonating our service representative.

■ Off

The operation by our service representative is not restricted.

■ On

Our service representative cannot change the following settings:

- "Delete All Data" (P.167)
- "Print Universal Unique ID" (P.174)
- "Encryption Key for Confidential Data" (P.179)
- "Service Rep. Restricted Operation" (P.179)
- "SSL/TLS Settings" (P.220)
- S/MIME Settings(P.221)
- "IPsec Settings" (P.223)
- "System Administrator Settings" (P.313)
- "Maximum Login Attempts by System Administrator" (P.320)
- "Overwrite Hard Disk" (P.325)
- Creating/Changing Users with System Administrator Rights

- Changing SNMP v3 Setting

When [On] is set, you can set a maintenance passcode of 4 to 12 digits in the [Maintenance Passcode] screen. Entering the passcode is required when our service representative performs maintenance.

Important

- When [On] is set, note the followings:
  - If you lose the System Administrator's user ID and passcode, the items restricted to the service representative cannot be changed.
  - If you lose the passcode, our service representative cannot perform maintenance in the case when an error occurs in the machine.
- To change the restricted items or perform maintenance, the electric circuit board of the machine must be replaced. You will be charged for the electrical circuit board and handling cost. Be sure not to lose the System Administrator's user ID and passcode.

Note

- An optional component is required to use this feature. For more information, contact our Customer Support Center.

Reference

- For information on the system administrator permissions, refer to "User Roles" (P.425).

Software Download

You can select whether or not to permit software downloading. This feature is for service representative use. For more information, contact our Customer Support Center.

Check Document Guides Position

Set whether or not to display the confirmation screen when you set the guide position of the document feeder to 8.5" and start loading. Select from [No] or [Yes].

Document Feeder Quiet Mode

When you use the duplex automatic document feeder, allows you to specify whether or not to reduce the noise of loading a document. You can specify the setting each for [Copy], [Scan], and [Fax].

Restrict Recipient Selection Method

Allows you to select whether or not to restrict a fax/Internet fax or an e-mail transmissions to addresses not registered on the Address Book.

Selecting [Only From Address Book] disables address entry using the keyboard or numeric keypad, and permits only transmission to addresses registered on the Address Book.

Note

- You can also give users authority to deactivate [Restrict Recipient Selection Method]. For more information, refer to "User Roles and Authorization Groups" (P.424).

Restrict User to Edit Address Book

Specify whether or not to permit local users to add and edit recipients in the Address Book.

When you select [Yes], local users cannot add or edit the Address Book.

Note

- You can also give users authority to deactivate [Restrict User to Edit Address Book]. For more information, refer to "User Roles and Authorization Groups" (P.424).

Auto Validation of Speed Dial Entry

Allows you to select whether the machine automatically validate the number when you use speed dial. When you select [Validate entry after a fixed time], you can select the time to auto-validation from [Shorter], [Default], or [Longer].

Note

- This feature does not appear for some models.

Data Indicator

Allows you to set the lighting pattern of the <Data> indicator.

■ Pattern 1

Lights up when a document is stored in the hard disk (optional) of the machine.

■ Pattern 2

Lights up when a fax document is in a print queue or a fax received with the Store Fax - Local Folder feature is stored in the folder.

■ Pattern 3

Lights up for 30 seconds after a job in the print queue is printed.

Paused Job Handling

Allows you to select the way of processing of a job left uncontrolled over the time specified in [Auto Clear Alert].

Reference

- For more information on Auto Clear, refer to "Auto Clear" (P.148).

■ Resume Job Automatically

The job is automatically resumed.

■ Delete Job Automatically

The job is automatically cancelled.

■ Resume / Delete by User

The job is still suspended until you resume the operation.

Copy Service Settings

In [Copy Service Settings], you can configure settings related to the Copy feature. The following shows the reference section for each procedure.

"Copy Tab - Features Allocation" (P.182)

"Preset Buttons" (P.183)

"Copy Defaults" (P.183)

"Copy Control" (P.189)

"Original Size Defaults" (P.192)

"Reduce/Enlarge Presets" (P.192)

"Custom Colors" (P.193)

"Annotations - Create Comments" (P.193)

1 On the [Tools] screen, select [System Settings] > [Copy Service Settings].

Reference

- For the method of displaying the [Tools] screen, refer to "System Settings Procedure" (P.138).

2 Select an item to set or change.

Copy Tab - Features Allocation

You can customize the features displayed on the [Copy] screen. Setting the most frequently used features enables you to avoid extra operations such as selecting tabs.

1 Select the number of features displayed on the [Copy] screen.

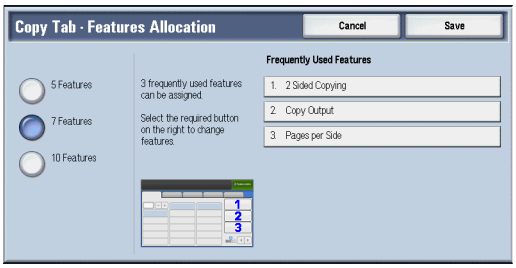

■5 Features

The following five features are shown on the screen: [Output Color], [Reduce/Enlarge], [Paper Supply], [2 Sided Copying], and [Copy Output]. Features and positions displayed cannot be changed.

■7 Features

Allows you to set features appearing in the fourth column from the left of the [Copy] screen.

Note

- [Output Color], [Reduce/Enlarge], and [Paper Supply] cannot be specified.

■ **10 Features**

Allows you to set features appearing in the third and fourth columns from the left of the [Copy] screen.

Note

- [Output Color], [Reduce/Enlarge] and [Paper Supply] cannot be specified.

2 From [Frequently Used Features] on the right of the screen, select a button and the position of the button where you want to allocate a feature.

Note

- The position of each button on the right side corresponds to the position on the [Copy] screen.

3 Select a feature to display, and select [Save].

Note

- Select [▲] to display the previous screen or [▼] to display the next screen.

4 Repeat steps 2 and 3 as required.

5 Select [Save].

Preset Buttons

Paper Supply - Button 2 - 5

Select the paper tray displayed in the second to fifth buttons in [Paper Supply] on the [Copy] screen.

Reduce/Enlarge - Button 3 - 4

Select the magnification ratio displayed in the third and fourth buttons in [Reduce/Enlarge] on the [Copy] screen.Select the ratio from the Reduce/Enlarge Preset buttons registered.

Front Cover Tray - Button 1 - 3

Set the default value of the tray displayed in [Paper Supply] when an option that printed on Front Cover is selected for [Front Cover] under [Output Format] > [Covers].

Back Cover Tray - Button 1 - 3

Set the default value of the tray displayed in [Paper Supply] when an option that printed on Back Cover is selected for [Back Cover] under [Output Format] > [Covers].

Copy Defaults

You can set the default settings of the Copy feature. When the machine is turned on,or the machine exits the Power Saver mode, or when the <Clear All> button is pressed, the machine resets to the default values set here. Setting frequently used features and values as the defaults can avoid extra operations required during the use of the machine.

Reference

- For more information on each setting item, refer to "Copy" in the User Guide.

Paper Supply

Set the default value for [Paper Supply] in the [Copy] screen.

Note

- When the default value of [Reduce/Enlarge] is set to [Auto %], [Auto Select] cannot be selected for [Paper Supply].

Reduce/Enlarge

Set the default value for [Reduce/Enlarge] in the [Copy] screen.Select the ratio from [100 %], [Auto %], and the buttons registered as Reduce/Enlarge Preset buttons.

Note

- When the default value of [Paper Supply] is set to [Auto Select], [Auto %] cannot be selected for [Reduce/Enlarge].

Reference

- For information on the Reduce/Enlarge Preset buttons, refer to "Reduce/Enlarge Presets" (P.192)".

Output Color

Set the default value for [Output Color] in the [Copy] screen.When [No Default] is selected, select the output color in the [Copy] screen before making copies.

Output Color (Simple Copy)

Set the default value for [Output Color] in the [Simple Copy] screen. You can select from [Auto], [Color], and [Black & White].

Single Color

Set the default value for [Single Color] in [More...] of [Output Color] in the [Copy] screen. You can select a color from six preset colors and six custom colors.

Reference

- For information about custom colors, refer to "Custom Colors" (P.193).

Dual Color - Source Color

Set the default value for [Source Color] that appears when [Dual Color] is selected for [More...] of [Output Color] in the [Copy] screen.Selecting [Color] enables you to select a color from six colors.

Dual Color - Target Area Color

Set the default value for [Target Area Color] that appears when [Dual Color] is selected for [More...] of [Output Color] in the [Copy] screen. You can select a color from seven preset colors and six custom colors.

Reference

- For information about custom colors, refer to "Custom Colors" (P.193).

Dual Color - Non-target Area Color

Set the default value for [Non-target Area Color] that appears when [Dual Color] is selected for [More...] of [Output Color] in the [Copy] screen. You can select a color from seven preset colors and six custom colors.

Reference

- For information about custom colors, refer to "Custom Colors" (P.193).

Original Type

Set the default value for [Original Type] on the [Image Quality] screen.

Original Type - Auto (Non-Black & White)

Set the default value for [Original Type] on the [Image Quality] screen.

This is valid when a color other than [Black & White] is selected for [Output Color] in the [Copy] screen.

Original Type - Auto (Black & White)

Set the default value for [Original Type] in the [Image Quality] screen.

This is valid when [Black & White] is selected for [Output Color] in the [Copy] screen.

Lighten/Darken

Set the default value for [Lighten/Darken] of [Image Options] in the [Image Quality] screen.

Contrast

Set the default value for [Contrast] of [Image Enhancement] in the [Image Quality] screen.

Sharpness

Set the default value for [Sharpness] of [Image Options] in the [Image Quality] screen.

Saturation

Set the default value for [Saturation] of [Image Options] in the [Image Quality] screen.

Background Suppression

This feature allows you to suppress the background color of documents.

Set the default value for [Suppress Background] of [Image Enhancement] in the [Image Quality] screen.

[Background Suppression] is valid when [Original Type] is set to [Photo & Text], [Text], or [Maps].

Color Balance - Yellow / Color Balance - Magenta / Color Balance - Cyan / Color Balance - Black

Set the default density levels for the [Color Balance] in the [Image Quality] screen.You can set density levels of each color for each of the [Highlights], [Midtones], and [Shadows].

Note

- Depending on the density level settings, [Color Balance] in the [Image Quality] screen is set as follows:
  - When the density levels of all colors are set to [0,0,0], [Color Balance] in the [Image Quality] screen is set to [Normal].
  - When the same value is set to all levels for each color (for example: [0,0,0] or [1,1,1]), [Color Balance] in the [Image Quality] screen is set to [Basic Color].
  - When the settings other than the ones described above are applied, [Color Balance] in the [Image Quality] screen is set to [Advanced Color].

Color Shift

Set the default value for [Color Shift] in the [Image Quality] screen.

2 Sided Copying

Set the default value for [2 Sided Copying] in the [Copy], [Layout Adjustment], and [Output Format] screens.

Mixed Size Originals

Set the default value for [Mixed Size Originals] in the [Layout Adjustment] screen.

Edge Erase - Top Edge

When you copy a document with the document cover open or when you copy a book, the edges and center margin of the document may be printed as black shadows. This feature allows you to erase such shadows on the top edge.

Set the default value for the amount of edge erased from the original in the top directions in [Edge Erase] in the [Layout Adjustment] screen. Set the value from 0 to 50 mm in 1 mm increments.

Note

- You cannot copy the whole area even if you set [0] to [Edge Erase - Top Edge]. For the printable area, refer to "Printable Area" (P.646).

Edge Erase - Bottom Edge

When you copy a document with the document cover open or when you copy a book, the edges and center margin of the document may be printed as black shadows. This feature allows you to erase such shadows on the bottom edge.

Set the default value for the amount of edge erased from the original in the bottom directions in [Edge Erase] in the [Layout Adjustment] screen. Set the value from 0 to 50 mm in 1 mm increments.

Note

- You cannot copy the whole area even if you set [0] to [Edge Erase - Bottom Edge]. For the printable area, refer to "Printable Area" (P.646).

Edge Erase - Left Edge

When you copy a document with the document cover open or when you copy a book, the edges and center margin of the document may be printed as black shadows. This feature allows you to erase such shadows on the left edge.

Set the default value for the amount of edge erased from the original in the left directions in [Edge Erase] in the [Layout Adjustment] screen. Set the value from 0 to 50 mm in 1 mm increments.

Note

- You cannot copy the whole area even if you set [0] to [Edge Erase - Left Edge]. For the printable area, refer to "Printable Area" (P.646).

Edge Erase - Right Edge

When you copy a document with the document cover open or when you copy a book, the edges and center margin of the document may be printed as black shadows. This feature allows you to erase such shadows on the right edge.

Set the default value for the amount of edge erased from the original in the right directions in [Edge Erase] in the [Layout Adjustment] screen. Set the value from 0 to 50 mm in 1 mm increments.

Note

- You cannot copy the whole area even if you set [0] to [Edge Erase - Right Edge]. For the printable area, refer to "Printable Area" (P.646).

Center Erase/Binding Edge Erase

When you copy a document with the document cover open or when you copy a book, the edges and center margin of the document may be printed as black shadows. This feature allows you to erase such shadows on the center of facing pages of a bound document or a booklet.

Set the default value for [Center] in [Edge Erase] in the [Layout Adjustment] screen. Set the value from 0 to 50 mm in 1 mm increments.

Note

- You cannot copy the whole area even if you set [0] to [Center Erase/Binding Edge Erase]. For the printable area, refer to "Printable Area" (P.646).

Edge Erase - 2 Sided Original - Side 2

This feature allows you to set whether the edge erase value of Side 1 and Side 2 are to be same or to be symmetrical.

Image Shift - Side 1

Set the default value for [Side 1] of [Image Shift] in the [Layout Adjustment] screen.

Image Shift - Side 2

Set the default value for [Side 2] of [Image Shift] in the [Layout Adjustment] screen.

Image Rotation

Set the default value for [Image Rotation] in the [Layout Adjustment] screen.

Image Rotation - Rotation Direction

Set the default value for [Image Rotation - Rotation Direction] of [Image Rotation] in the [Layout Adjustment] screen.

Original Orientation

Set the default value for [Original Orientation] in the [Layout Adjustment] screen.

Pages per Side

Set the default value for [Pages per Side] in the [Copy] and [Output Format] screens.

Copy Output

This feature allows you to set the finishing options to output multiple copies. Select [Auto], [Collated], [Uncollated], or [Uncollated with Separators].

Set the default value for [Copy Output] in the [Copy] and [Output Format] screens.

Uncollated - Default Separator Tray

Set the default value for [Separators Tray] under [Copy Output] > [Uncollated with Separators] in the [Copy] and [Output Format] screens.

Output Destination

Set the default value for [Output Destination/Offset] under [Copy Output] in the[Copy] and [Output Format] screens.

Note

- This feature does not appear for some models. An optional component is required. For more information, contact our Customer Support Center.

Output Destination (Simple Copy)

Set the output destination when you start copying from the [Simple Copy] screen.

Note

- If paper cannot be output to the tray you set, the destination may be changed automatically.
- When the [Simple Copy] screen is displayed, you can confirm the output destination on the [Review] screen, which can be displayed by pressing the <Review> button. For information on the <Review> button, refer to "Product Overview" > "Control Panel" in the User Guide.

Sample Job

Set the default value for [Sample Job] in the [Job Assembly] screen.

Annotations - Stored Comment

Set the default value for [Stored Comments] displayed when [Comment] is selected for [Annotations] in the [Output Format] screen.

You can select a comment type from eight preset types and custom text registered.

Reference

- For information about how to set custom text, refer to "Annotations - Create Comments" (P.193).

Annotations - Comment on Side 1 and Side 2

Set the default value for [Position] displayed when [Comment] is selected for [Annotations] in the [Output Format] screen.

Annotations - Comment - Font Size

Set the default value for [Font Size] under [Format & Style] displayed when [Comment] is selected for [Annotations] in the [Output Format] screen.

Annotations - Comment - Font Color

Set the default value for [Font Color] under [Format & Style] displayed when [Comment] is selected for [Annotations] in the [Output Format] screen.

Date - Position on Side 1 and Side 2

Set the default value for [Position] displayed when [Date Stamp] is selected for [Annotations] in the [Output Format] screen.

Date - Font Size

Set the default value for [Font Size] under [Font Size] displayed when [Date Stamp] is selected for [Annotations] in the [Output Format] screen.

Page Numbers - Style

Set the default value for [Style] displayed when [Page Numbers] is selected for [Annotations] in the [Output Format] screen.

Page Numbers - Position on Side 1 and Side 2

Set the default value for [Position] displayed when [Page Numbers] is selected for[Annotations] in the [Output Format] screen.

Page Numbers - Font Size

Set the default value for [Font Size] under [Font Size] displayed when [Page Numbers] is selected for [Annotations] in the [Output Format] screen.

Bates Stamp - Number of Digits

Set the default value for [Number of Digits] displayed when [Bates Stamp] is selected for [Annotations] in the [Output Format] screen.

Bates Stamp - Position on Side 1 and Side 2

Set the default value for [Position] displayed when [Bates Stamp] is selected for [Annotations] in the [Output Format] screen.

Bates Stamp - Font Size

Set the default value for [Font Size] under [Font Size] displayed when [Bates Stamp] is selected for [Annotations] in the [Output Format] screen.

Booklet Creation - Default Cover Tray

Set the default value for [Covers] which is displayed when you select a Cover page option in the [Booklet Creation] screen.

Covers - Default Front Cover Tray, Default Back Cover Tray

Set the default value for [Front Cover] and [Back Cover] which are displayed when you select Front Cover and Back Cover options in the [Covers] screen.

Separators - Default Separator Tray

Set the default value for [Segment Separator Tray] under [Segment Separators] which is displayed when you set [Build Job] to [On] in the [Job Assembly] screen.

Copy Control

You can configure settings related to copy operation control.

Memory Full Procedure

If there is insufficient hard disk memory while scanning a document, a screen appears asking you how you want to handle the partially stored data.

Set the process you want the machine to perform for the partially stored data after a certain time has elapsed in the confirmation screen.

Reference

- You can set the time until the memory full procedure is carried out. For more information, refer to "Machine Clock/Timers" (P.146).

■ Delete Job

Deletes the data partially stored.

■ Run Job

Treats the read-in data as valid, and start copying the document partially stored.

Maximum Stored Pages

Set the maximum number of pages stored for a copy document. You can set from 1 to 999 pages.

Auto Paper Off

Select the tray used when [Auto Select] of [Paper Supply] in the [Copy] screen is cancelled. [Auto Select] of [Paper Supply] is cancelled when [Auto %], [Auto X-Y %] for [Independent X-Y %], or [Slight Reduction (Improves Fit)] is selected.

Mixed Size Originals - 2 Sided Copy

Specify paper to copy side 2 of a document: in 2 sided copying, if the size of side 1 and side 2 of a document is different, and the machine detects different paper size for sides 1 and 2.

Important

- When the side 1 and side 2 are different sizes and if the side 2 is copied on the sheet on which the side 1 has been printed, a part of the image may be missing.

■ Copy to new sheet

Side 2 is copied as side 1 on a new sheet of paper.

■ Copy to Side 2

Side 2 is copied on the reverse side of side 1 without changing paper size.

Fine-tune 100%

You can fine-tune magnification when copying at 100% (actual size). The set value is applied to [100%] in the [Copy] screen is set to 100%.

Set the value in the X/Y direction between 98 and 102% in 0.1% increments.

Important

- This feature is applied only when a copy is made using the document glass. This setting is not reflected in the magnification (100%) under [Independent X-Y%] or [Calculator %].

Note

- A magnification displays [100%] even if [Fine-tune 100%] is selected.

ID Card Copy - Reduce/Enlarge

Set the copy magnification ratio when to copy ID cards. Selecting [Allow to Change] allows you to specify the ratio between 25 to 400 % in 1 % increments.

Note

- The machine may copy an ID card in a different orientation from the original orientation depending on the magnification ratio you specified.

Background Suppression (Photo & Text)

Set the background suppression level for color copying. This setting is valid when [Photo & Text] is selected for [Original Type] in the [Image Quality] screen. The larger the value, the stronger the effect of removing background noise.

Background Suppression Level (Text)

Set the background suppression level for color copying. This setting is valid when [Text] is selected for [Original Type] in the [Image Quality] screen.

The larger the value, the stronger the effect of removing background noise.

Photo & Text /Printed Original

Set the type of document when [Printed Original] of [Photo & Text] is selected for [Original Type] in the [Image Quality] screen.

■ Normal

Copies with standard image quality.

■ Inkjet Originals

Select [Inkjet Originals] when copying a document printed with an inkjet printer. This improves the recognition of inkjet colors.

■ Highlighted Originals

Select [Highlighted Originals] when copying an original marked with a highlight pen. This improves the recognition of the colors of highlight pen.

Original Type - See-Through Paper

When [Text] is selected for [Original Type] in the [Image Quality] screen, set whether to display [Text on See-Through Paper].

Annotations - Comment Density

Set the translucency of the comment printed as annotation.

You can select a translucency value from [Darken], [Normal], and [Lighten]. Darken represents no translucency.

Note

- If a stamp set to [Darken] density is printed over text, the text may be unreadable.

Comment Position - Top Left, - Top Center, - Top Right, - Left Center, - Center, - Right Center, - Bottom Left, - Bottom Center, and - Bottom Right

You can adjust the position to print a comment finely.

Date Position - Top Left, - Top Center, - Top Right, - Bottom Left, - Bottom Center, and - Bottom Right

You can adjust the position to print a date stamp finely.

Page Number Position - Top Left, - Top Center, - Top Right, - Bottom Left, - Bottom Center, and - Bottom Right

You can adjust the position to print a page number finely.

Bates Stamp - Top Left, - Top Center, - Top Right, - Bottom Left, - Bottom Center, and - Bottom Right

You can adjust the position to print a bates stamp finely.

Quantity Display

You can select how you want to display the counter in the Copy service.

Select from [Quantity], [Quantity and Memory], and [Quantity and Original Count].

Maximum Number of Sets

Set the maximum number of allowed sets to copy between 1 and 999. Users will not be able to specify a larger number of sets to copy than the value set here.

Original Size Defaults

Set the original sizes displayed in [Original Size] in the [Layout Adjustment] screen.

You can assign original sizes to the buttons other than [Auto Detect].

If you frequently make copies of non-standard size document, setting non-standard size as the default can avoid extra operations required during the use of the machine.

■ A/B Series Size

You can select a size from A and B series sizes.

■ Inch Size

You can select a size from inch series sizes.

■ Others

You can select a size from other sizes.

■ Custom Size

You can enter any size. Set the width (X) from 15 to 432 mm, and the height (Y) from 15 to 297 mm in 1 mm increments.

Reduce/Enlarge Presets

Set the magnifications displayed as [Preset %] which are displayed when [Proportional %] is selected under [Reduce/Enlarge] in the [Copy] screen.

You can assign any magnification to the Reduce/Enlarge Preset buttons other than[100 %] and [Auto %].

Custom Colors

Set the custom colors used for [Single Color] and [Dual Color] in the [Output Color]screen.

You can assign custom colors with yellow (0 to 100 %), magenta (0 to 100 %), and cyan (0 to 100 %) to each custom color buttons 1 to 6.

Note

- Adjust so that the total of yellow, magenta, and cyan does not exceed 240 %.

Annotations - Create Comments

Register text to print with [Comment] under [Annotation]. You can enter up to 64 singlebyte characters(32 double-byte characters).

Reference

- For information about how to enter characters, "Entering Text" (P.45).

Connectivity & Network Setup

In [Connectivity & Network Setup], you can configure settings related to the Connectivity & Network feature.

Reference

- For information on Connectivity and Network Settings, refer to "Printer Environment Settings" (P.335) or "E-mail Environment Settings" (P.349).
- If you use CentreWare Internet Services, more detailed settings are possible. For more information, refer to "CentreWare Internet Services Settings" (P.327).

The following shows the reference section for each setting.

"Port Settings" (P.194)

"Protocol Settings" (P.200)

"Machine's E-mail Address/Host Name" (P.205)

"Proxy Server Settings" (P.206)

"EP Proxy Server Setup" (P.207)

"SIP Settings" (P.209)

"T.38 Settings" (P.212)

"Outgoing/Incoming E-mail Settings" (P.212)

"Remote Authentication/Directory Service" (P.214)

"Security Settings" (P.220)

"Other Settings" (P.226)

1. On the [Tools] screen, select [System Settings] > [Connectivity & Network Setup].

Reference

- For the method of displaying the [Tools] screen, refer to "System Settings Procedure" (P.138).

2. Select an item to set or change.

Port Settings

Set the interface of the machine connected to a client. In [Port Settings], you can configure the following settings.

Important

- For LPD, Port9100, HTTP-SSL/TLS, and SIP, do not use a number that is the same as a port number of another port.

  For a port that uses HTTP (IPP, Internet Service (HTTP), UPnP Discovery, SOAP, WebDAV, and Web Services on Devices (WSD)), do not use a number that is the same as a port number of LPD, Port9100, and HTTP-SSL/TLS. Furthermore, if any of the above are set to one of the port numbers indicated below, operation may no longer be performed properly depending on the setting conditions of the port:

25, 139, 427, 445, 631, 15000

- Only LPD, Port9100, SNMP , Internet Services (HTTP), and Bonjour ports are available for Ethernet 2 when two Ethernet interfaces are used.
- Secondary Ethernet (optional) does not support IPP and Google Cloud Print ports. Print submission of AirPrint and Google Cloud Print via Ethernet 2 is not available.

Reference

- For information on HTTP-SSL/TLS port, refer to "Security Settings" (P.220).
- You can configure the Google Cloud Print port settings in CentreWare Internet Services. For more information, refer to the help of CentreWare Internet Services.

Important

- To display the online help for CentreWare Internet Services, users need to have the environment to connect to the Internet. The communication fee shall be borne by you.

USB

■ Port Status

Select [Enabled] to use a USB interface.

■ Print Mode

Select the printer language use on the machine. Selecting [Auto] enables the machine to automatically determine and use the most suitable language to print data received from the host device.

■ PJL

PJL (Printer Job Language) is a job control language and a PJL command is data prepended to the top of the print jobs. Usually select [Enabled].

■ Auto Eject Time

Configure the time that the data so far received by the machine will automatically be printed since data is no longer sent to the printer.

You can enter a time between 5 and 1275 seconds in 5 seconds increments.

■ Adobe Communication Protocol

◆ Standard

Select this when the output protocol of the print driver is in the ASCII format.

◆ Binary

Select this when the output protocol of the print driver is in the BCP format.

◆ TBCP

Select this when the output protocol of the print driver is in the TBCP format.

◆ RAW

Select this when the output protocol of the print driver is in the ASCII or binary format.

The data is printed without being controlled by the Adobe communication protocol.

■ PostScript Wait Timeout

The machine automatically terminates a connection when the machine does not receive data for a certain period of time. When data is being printed with [RAW] is selected for [Adobe Communication Protocol], select [Disabled] if you want to use the time period set in [Auto Eject Time] or select [Enabled] if you want to use the timeout period of PostScript.

LPD

■ Port Status

Select [Enabled] to use LPD.

■ Port Number

Enter a port number for LPD from 1 to 65535.

The default value is 515.

Important

- Do not use the numbers assigned to the other ports.

■ Maximum Number of Sessions

Enter the maximum number of client sessions using LPD. You can enter a number from 1 to 10 in 1 session increments.

The default value is 5.

SMB Client

■ Port Status

Select [Enabled] to use SMB when you use the Scan to PC (SMB) service or SMB authentication service

IPP

■ Port Status

Select [Enabled] to use IPP.

Set this when you want to use IPP (Internet Printing Protocol) to print via the Internet.

■ Added Port Number

Select [Disabled] when you want to set the machine does not accept IPP from other than the standard port number, or select [Enabled] when accepts all port numbers.

Enter a port number for IPP other than the standard port number from 1 to 65535.

The default value is 80.

Important

- Do not use a number that is the same as a port number of another port. However, you can use the same port number for a port that uses HTTP (IPP, Internet Services (HTTP), UPnP Discovery, SOAP, WebDAV, and Web Services on Devices (WSD)).

Note

- [Added Port Number] cannot be configured if [Port Status] is set to [Disabled]. To configure [Added Port Number], enable port status and reboot the machine, and then configure [Added Port Number].

Bonjour

■ Port Status

Select [Enabled] to use Bonjour.

Note

- To print from a printer detected by [Bonjour], the LPD port must be activated in advance.

Port 9100

■ Port Status

Select [Enabled] to use Port9100.

Select this option when the communication protocol is in the RAW format for Windows Standard TCP/IP port monitor.

■ Port Number

Enter a port number for Port9100 from 1 to 65535.

The default value is 9100.

Important

- Do not use the numbers assigned to the other ports.

SNMP

■ Port Status

Select [Enabled] to use SNMP, when you use any web applications manufactured by Fuji Xerox to control the machine on the network.

SIP

■ Port Status

Select [Enabled] to use SIP, when you use IP fax (SIP) transmission.

■ Port Number

Enter a port number to use IP fax (SIP).

The default value is 5060.

Important

- Do not use any numbers assigned to other ports.

Note

- IP fax (SIP) is not available for some models.

FTP Client

■ Port Status

Select [Enabled] when you use the Scan to PC service with FTP transmission.

Note

- Select a communication mode to send data scanned via FTP from [Passive Mode] and [Active Mode]. [Passive Mode] is selected by factory default. You can change the setting from CentreWare Internet Services.

Receive E-mail

■ Port Status

Select [Enabled] when you receive e-mails or Internet faxes.

Send E-mail

■ Port Status

Select [Enabled] when you send e-mails or Internet faxes.

E-mail Notification Service

■ Port Status

Select [Enabled] when you use the E-mail Notification Service. The E-mail Notification Service notifies you of the machine status or the completion of a print job, and a direct fax job by e-mail.

Note

- [Consumables Status], [Parts Status], [Paper Tray Status], [Output Tray Status], [Jam Status], [Interlock Status], and [Fault Notice] are notified as the machine status.
- You can configure the E-mail Notification Service in CentreWare Internet Services. For more information, refer to the help of CentreWare Internet Services.

Important

- To display the online help for CentreWare Internet Services, users need to have the environment to connect to the internet. The communication fee shall be borne by you.

UPnP Discovery

■ Port Status

Select [Enabled] to use UPnP.

■ Port Number

Enter a port number for UPnP communication from 1 to 65535.

The default value is 80.

Important

- Do not use a number that is the same as a port number of another port. However, you can use the same port number for a port that uses HTTP (IPP, Internet Services (HTTP), UPnP Discovery, SOAP, WebDAV, and Web Services on Devices (WSD)).

WSD

Note

- WSD stands for Web Services on Devices.

■ WSD Print - Port Status

Select [Enabled] to use WSD Print.

Set this when you search a device on a network from Windows Vista®, Windows 7, Windows 8, Windows 8.1, Windows ServerR 2012, or Windows Server 2012 R2.

■ WSD Scan - Port Status

Select [Enabled] to use WSD Scan.

Set this when you search a device on a network from Windows Vista, Windows 7, Windows 8, Windows 8.1, Windows Server 2012, or Windows Server 2012 R2.

■ Port Number

Enter a port number from 1 to 65535.

The default value is 80.

Important

- Do not use a number that is the same as a port number of another port. However, you can use the same port number for a port that uses HTTP (IPP, Internet Services (HTTP), UPnP Discovery, SOAP, WebDAV, and Web Services on Devices (WSD)).

Internet Services (HTTP)

■ Port Status

Select [Enabled] to use CentreWare Internet Services.

Reference

- For more information about CentreWare Internet Services, refer to "CentreWare Internet Services Settings" (P.327).

■ Port Number

Enter a port number for the Internet Services from 1 to 65535.

The default value is 80.

Important

- Do not use a number that is the same as a port number of another port. However, you can use the same port number for a port that uses HTTP (IPP, Internet Services (HTTP), UPnP Discovery, SOAP, WebDAV, and Web Services on Devices (WSD)).

Note

- You cannot select [Port Number], if HTTP port is disabled. To configure [Port Number], enable port status and reboot the machine, and then configure [Port Number].

SOAP

■ Port Status

Select [Enabled] when you use an application program such as Device Setup.

■ Port Number

The default value is 80.

Enter a port number for SOAP from 1 to 65535.

Important

- Do not use a number that is the same as a port number of another port. However, you can use the same port number for a port that uses HTTP (IPP, Internet Services (HTTP), UPnP Discovery, SOAP, WebDAV, and Web Services on Devices (WSD)).

WebDAV

■ Port Status

Select [Enabled] when you use an application program such as Network Scanner Utility 3 to access folders in the machine.

Important

- We recommend you to enable [HTTP - SSL / TLS Communication] under [SSL / TLS Settings] when you use WebDAV. This is an effectual way to avoid password leaking.

Note

- You cannot select [Port Number] and [Operation Time-Out], if WebDAV port is disabled. To configure [Port Number] and [Operation Time-Out], enable port status and reboot the machine, and then configure [Port Number] and [Operation Time-Out].

■ Port Number

Enter a port number for WebDAV from 1 to 65535.

The default value is 80.

Important

- Do not use a number that is the same as a port number of another port. However, you can use the same port number for a port that uses HTTP (IPP, Internet Services (HTTP), UPnP Discovery, SOAP, WebDAV, and Web Services on Devices (WSD)).

■ Operation Time-Out

You can enter an operation time-out period between 1 and 65535 seconds in 1 second increments.

ThinPrint

■ Port Status

You can use the machine for print in the ThinPrint® .print environment. The machine decompresses and prints the compressed print data sent from the print server.

Select [Enabled] when you use ThinPrint.

■ Port Number

Enter a port number for ThinPrint from 1 to 65535.

The default value is 4000.

Important

- Do not use any numbers assigned to the other ports.

Note

- ThinPrint is available when the communication protocol uses IPv4.
- The maximum of three connections are possible at a time.

■ Wireless LAN Settings

You can make the settings for the wireless LAN communication. For information on the setting procedures, refer to "Wireless LAN Converter Setup Guide" accompanying the Wireless LAN Converter.

Protocol Settings

Set the parameters required for communications. In [Protocol Settings], you can set the following items.

- Ethernet Settings
- TCP/IP - Common Settings
- TCP/IP - Network Settings

Important
- To configure each category, select the corresponding item and then select [Change Settings].

Also on [Ping Connection Test], you can check whether or not the machine can be properly connected to a network with the configured condition.

Ethernet Settings

Configure the Ethernet settings.

■ Ethernet1 - Network Name, Ethernet 2 - Network Name

When two Ethernet interfaces are used, specify the names respectively.

Note
- This item is displayed only when Secondary Ethernet (optional) is installed on the machine.

■ Ethernet - Rated Speed / Ethernet 1 - Rated Speed, Ethernet 2 - Rated Speed

Set the communication speed for the Ethernet interface.

Note
- The title of this setting item differs depending on the Ethernet interface configuration: When single Ethernet interface is used, [Ethernet - Rated Speed] is displayed. When two Ethernet interfaces are used, [Ethernet 1 - Rated Speed] and [Ethernet 2 - Rated Speed] are displayed.

◆ Auto

Select this to detect the Ethernet transmission rate automatically.

◆ 100 Mbps Full-Duplex

Select this to set 100BASE-TX (Full Duplex) as the default value.

◆ 100 Mbps Half-Duplex

Select this to set 100BASE-TX (Half Duplex) as the default value.

◆ 10 Mbps Full-Duplex

Select this to set 10BASE-T (Full Duplex) as the default value.

◆ 10 Mbps Half-Duplex

Select this to set 10BASE-T (Half Duplex) as the default value.

◆ 1000 Mbps

Select this to set 1000BASE-T as the default value.

◆ Gigabit Ethernet (GbE) Port

Select this check box to use Gigabit Ethernet Port.

TCP/IP - Common Settings

Configure common settings to use TCP/IP.

■ Primary Network

When two Ethernet interfaces are used, the name of interface which works as the primary network is displayed.

Note

- The primary network is "Ethernet 1". You cannot set "Ethernet 2" as the primary network.
- This item is displayed only when Secondary Ethernet (optional) is installed on the machine. You cannot edit the setting from here.

■ IP Mode

Allows you to select the TCP/IP operation mode.

Displays current IP mode.

◆ IPv4 Mode

Select this option for IPv4.

◆ IPv6 Mode

Select this option for IPv6.

◆ Dual Stack

Select this option for an environment using both IPv4 and IPv6.

TCP/IP - Network Settings/ TCP/IP - Network Settings (Ethernet 1), TCP/IP - Network Settings (Ethernet 2)

Configure network settings other than common settings to use TCP/IP.

Important

- Configuring same IP address for [TCP/IP - Network Settings (Ethernet 1)] and [TCP/IP - Network Settings (Ethernet 2)] is prohibited. When setting the same IP address to each Ethernet, contact our Customer Support Center.
- Only LPD, Port9100, and Bonjour ports are available for [TCP/IP - Network Settings (Ethernet 2)]. The applications using any other ports such as Network Scanner Utility 3 may not work with the [TCP/IP - Network Settings (Ethernet 2)] setting.

Note

- We recommend you to specify different IP addresses between [TCP/IP - Network Settings (Ethernet 1)] and [TCP/IP - Network Settings (Ethernet 2)].
- The title of this setting item differs depending on the Ethernet interface configuration: When single Ethernet interface is used, [TCP/IP - Network Settings] is displayed. When two Ethernet interfaces are used, [TCP/IP - Network Settings (Ethernet 1)] and [TCP/IP - Network Settings (Ethernet 2)] are displayed.
- For [TCP/IP - Network Settings (Ethernet 1)] and [TCP/IP - Network Settings (Ethernet 2)], same setting items as [TCP/IP - Network Settings] are displayed. You can configure individual settings for each Ethernet interface.
- When any interface names are specified in [Ethernet1 - Network Name] and [Ethernet2 - Network Name], the specified names are displayed instead of "Ethernet1" and "Ethernet2" of [TCP/IP - Network Settings (Ethernet 1)] and [TCP/IP - Network Settings (Ethernet 2)] respectively.

■ IPv4 - IP Address Resolution

Allows you to select a method for obtaining the IP address, subnet mask, and gateway address.

◆ DHCP

The address, subnet mask, and gateway address will automatically be set via DHCP.

◆ BOOTP

The address, subnet mask, and gateway address will automatically be set via BOOTP.

◆ **RARP**

The address, subnet mask, and gateway address will automatically be set via RARP.

◆ **DHCP/AutoIP**

The address, subnet mask, and gateway address will automatically be set via DHCP/AutoIP.

If the machine fails to communicate with the DHCP server, the AutoIP function is automatically enabled and an IP address (169.254.XXX.XXX) is assigned to the machine. When communication between the machine and the DHCP server recovers, the machine obtains an IP address, a subnet mask, and a gateway address by the DHCP server.

◆ **STATIC**

Allows you to manually specify an IP address, a subnet mask, and a gateway address.

Note

- To configure a subnet mask and a gateway address, an IP Address must be set first.

■ IPv4 - IP Address

Enter the IP address using the keyboard displayed or the numeric keypad when selecting [STATIC] at [IPv4 - IP Address Resolution].

Note

- Enter the address in the format "xxx.xxx.xxx.xxx", where "xxx" is a numeric value from of 0 to 255.
- Specify an IP address using numbers (0 to 9) and periods (.). If you mistyped a character on the screen, select [Backspace] to delete the character.

■ IPv4 - Subnet Mask

Enter the subnet mask using the keyboard displayed or the numeric keypad when selecting [STATIC] at [IPv4 - IP Address Resolution].

Note

- Enter the address in the format "xxx.xxx.xxx.xxx", where "xxx" is a numeric value from of 0 to 255.
- Specify a subnet mask using numbers (0 to 9) and periods (.). If you mistyped a character on the screen, select [Backspace] to delete the character.

■ IPv4 - Gateway Address

Enter the gateway address using the keyboard displayed or the numeric keypad when selecting [STATIC] at [IPv4 - IP Address Resolution].

Note

- Enter the address in the format "xxx.xxx.xxx.xxx", where "xxx" is a numeric value from of 0 to 255.
- Specify a gateway address using numbers (0 to 9) and periods (.). If you mistyped a character on the screen, select [Backspace] to delete the character.

■ IPv4 - DNS Server Setup

Set the DNS server.

◆ **Get IP Address from DHCP**

Set whether or not to automatically obtain the address of the DNS server from the DHCP server.

◆ **Preferred DNS Server IP Address, Alternate DNS Server 1 IP Address, Alternate DNS Server 2 IP Address**

When [Get IP Address from DHCP] is set to [Disabled], manually set the DNS server address.

Specify alternate DNS server addresses for [Alternate DNS Server 1 IP Address] and [Alternate DNS Server 2 IP Address].

■ IPv4 - IP Filter

Select whether or not to limit the IPv4 addresses that can access the machine.

Important

- To display the online help for CentreWare Internet Services, users need to have the environment to connect to the internet. The communication fee shall be borne by you.

Note

- [IPv4 - IP Filter] applies to all features using TCP/IP, such as Print, Store to Folder, and CentreWare Internet Services.
- To set the IPv4 IP addresses that the machine accepts connection from, use [IP Filtering] in CentreWare Internet Services. For more information, refer to the help of CentreWare Internet Services or refer to "CentreWare Internet Services Settings" (P.327).
- When [IP Filtering] is enabled, make sure to switch the FTP transfer mode to [Active Mode] to transfer the scanned image from the machine via FTP. You can switch the FTP transfer mode from CentreWare Internet Services.

■ IPv6 Address Manual Configuration

Allows you to select whether or not to configure the IPv6-address settings manually.

■ Manually Configured IPv6 Address

This setting is configurable when [IPv6 Address Manual Configuration] is set to [Enable]. Specify an IPv6 address.

Note

- Enter the address in the format "xxxx:xxxx:xxxx:xxxx:xxxx:xxxx:xxxx:xxxx", where "xxxx" is a hexadecimal value.
- Specify an address using alphanumeric characters (0 to 9 and A to F) and colons (:). If you mistyped a character on the screen, select [Backspace] to delete the character.

■ Manually Configured IPv6 Address Prefix

This setting is configurable when [Manually Configured IPv6 Address] is set. Specify a prefix length from 0 to 128.

■ Manually Configured IPv6 Gateway

This setting is configurable when [Manually Configured IPv6 Address] is set. Specify a gateway address.

Note

- Enter the address in the format "xxxx:xxxx:xxxx:xxxx:xxxx:xxxx:xxxx:xxxx", where "xxxx" is a hexadecimal value.

■ IPv6 - DNS Server Setup

Set the DNS server for IPv6.

◆ Get IP Address from DHCP

Set whether or not to automatically obtain the address of the DNS server from the DHCP server.

◆ Preferred DNS Server IP Address, Alternate DNS Server 1 IP Address, Alternate DNS Server 2 IP Address

When [Get IP Address from DHCP] is set to [Disabled], manually set the DNS server address.

Specify alternate DNS server addresses for [Alternate DNS Server 1 IP Address] and [Alternate DNS Server 2 IP Address].

■ Automatically Configured IPv6 Address

Displays the following addresses, which are automatically assigned.

- Link-local Address

- Auto Stateless Address 1 and Prefix Length
- Auto Stateless Address 2 and Prefix Length
- Auto Stateless Address 3 and Prefix Length
- Auto Gateway Address

■ IPv6 - IP Filter

Select whether or not to limit the IPv6 addresses that can access the machine.

Note

- IPv6 - IP Filter] applies to all features using TCP/IP, such as Print, Store to Folder, and CentreWare Internet Services.
- To set the IPv6 addresses that the machine accepts connection from, use [IP Filtering] in CentreWare Internet Services. For more information, refer to the help of CentreWare Internet Services or refer to "CentreWare Internet Services Settings" (P.327).
- When [IP Filtering] is enabled, make sure to switch the FTP transfer mode to [Active Mode] to transfer the scanned image from the machine via FTP. You can switch the FTP transfer mode from CentreWare Internet Services.

Important

- To display the online help for CentreWare Internet Services, users need to have the environment to connect to the internet. The communication fee shall be borne by you.

Ping Connection Test

Allows you to confirm whether the machine connects your computer properly or not with the configured condition. Set the following setting and then select the [Start] button to start Ping connection test.

■ Network Interface

Select [Ethernet 1] or [Ethernet 2] according to the protocol settings.

Note

- This item is displayed only when Secondary Ethernet (optional) is installed on the machine.

■ Protocol

Select [IPv4] or [IPv6] according to the protocol settings.

■ IP Address or Host Name

Enter the IP address or host name of your computer. When using IP address, enter the IPv4 address or IPv6 address. When using host name, enter the host name with up to 32 single-byte characters.

Machine's E-mail Address/Host Name

Set the e-mail address, host name, and domain name of the machine.

E-mail Address

Enter the E-mail address of the machine with up to 128 single-byte characters.

■ When receiving E-mail via SMTP

You can set any name for the account (on the left side of @). Set the address section (on the right side of @), with the combination of the host name and domain name. An alias cannot be set.

Example: mymail@myhost.example.com

- Account name: mymail
- Host name: myhost
- Domain Name: example.com

■ **When receiving E-mails via POP3**

Enter the POP user name (on the left side of @) and incoming POP3 mail server name in the address section (on the right side of @). You can set an alias, such as mymail@example.com.

Example: mymail@myhost.example.com

- Account name: mymail

Machine Name

Enter the machine name with up to 32 single-byte characters.

Host Name

Enter the host name with up to 32 single-byte characters

Important

- When you use SMB, enter the first 15 letters of the host name. The host name must be up to 15 single-byte characters to identify the machine properly.

Domain Name

Enter the domain name with up to 64 single-byte characters.

Proxy Server Settings

Configure the settings for a proxy server.

Configure a proxy server when using inbound/outbound access.

Important

- Do not set this item unless you use services requiring proxy server settings.

Use Proxy Server

Select whether or not to use a proxy server.

Proxy Server Setup

Select the proxy server specification from [Same Proxy for All Protocols] or [Different Proxy for Each Protocol].

Addresses to Bypass Proxy Server

Enter addresses not using the proxy server. You can specify the addresses by IPv4 address, IPv6 address, and FQDN. You can use wildcards "*" for specifying the addresses.

HTTP Proxy Server Name

Enter the server name or IP address of the HTTP proxy server. Up to 255 characters are allowed. You can specify the addresses by IPv4 address, IPv6 address, and FQDN.

HTTP Proxy Server Port Number

Set the HTTP proxy server port number from 1 to 65535.

The default value is 8080.

Important

- Do not use the numbers assigned to the other ports.

HTTP Proxy Server Authentication

Select [Enabled] when authentication is required to connect to the HTTP proxy server.

HTTP Proxy Server Login Name

Enter a login name of the HTTP proxy server. Up to 31 characters are allowed.

HTTP Proxy Server Password

Enter a password of the HTTP proxy server. Up to 31 characters are allowed.

HTTPS Proxy Server Name

Enter the HTTPS proxy server name or the IP address. Up to 255 characters are allowed. You can specify the addresses by IPv4 address, IPv6 address, and FQDN.

HTTPS Proxy Server Port Number

Set the HTTPS proxy server port number from 1 to 65535.

The default value is 8080.

Important

- Do not use the numbers assigned to the other ports.

HTTPS Proxy Server Authentication

Select [Enabled] when authentication is required to connect to the HTTPS proxy server.

HTTPS Proxy Server Login Name

Enter a login name of the HTTPS proxy server. Up to 31 characters are allowed.

HTTPS Proxy Server Password

Enter a password of the HTTPS proxy server. Up to 31 characters are allowed.

EP Proxy Server Setup

Configure the settings for a proxy server for EP connection when the EP system via the Internet is used.

Important

- Configure the settings when the EP system via the Internet is used.

Reference

- For information on EP system, refer to "EP System" (P.749).

Proxy Server Setup

Select the proxy server specification from [Same Proxy for All Protocols] or [Different Proxy for Each Protocol]. When [Different Proxy for Each Protocol] is selected, you can configure the HTTPS proxy server and HTTP proxy server, respectively.

When [Same Proxy for All Protocols] is selected, the settings for the HTTPS proxy server are copied to those of the HTTP proxy server.

HTTPS Proxy Server Name

Enter the HTTPS proxy server name or the IP address. Up to 255 characters are allowed. You can specify the addresses by IPv4 address, IPv6 address, and FQDN.

HTTPS Proxy Server Port Number

Set the HTTPS proxy server port number from 1 to 65535.

The default value is 8080.

Important

- Do not use the numbers assigned to the other ports.

HTTPS Proxy Server Authentication

Select [Enabled] when authentication is required to connect to the HTTPS proxy server.

HTTPS Proxy Server Login Name

Enter a login name of the HTTPS proxy server. Up to 31 characters are allowed.

HTTPS Proxy Server Password

Enter a password of the HTTPS proxy server. Up to 31 characters are allowed.

HTTP Proxy Server Name

Enter the server name or IP address of the HTTP proxy server. Up to 255 characters are allowed. You can specify the addresses by IPv4 address, IPv6 address, and FQDN.

HTTP Proxy Server Port Number

Set the HTTP proxy server port number from 1 to 65535.

The default value is 8080.

Important

- Do not use the numbers assigned to the other ports.

HTTP Proxy Server Authentication

Select [Enabled] when authentication is required to connect to the HTTP proxy server.

HTTP Proxy Server Login Name

Enter a login name of the HTTP proxy server. Up to 31 characters are allowed.

HTTP Proxy Server Password

Enter a password of the HTTP proxy server. Up to 31 characters are allowed.

SIP Settings

Configure the settings for a SIP user ID, SIP server to go through, and VoIP gateway. In [SIP Settings], you can set the following items.

SIP User ID (Sign-in Name)

Enter the SIP user name of the machine.

For example: 111@192.0.2.1

The left side of @ (111 in this example) is called the SIP user name.

Note

- If you do not use a SIP server, specify the IP address of the machine on the right side of "@".
- When you use a SIP server manufactured by Cisco Systems, Inc. for [SIP User Name] of the machine, you can use only IPv4 address strings of the SIP server on the right side of "@".

  You cannot use IPv6 address strings, FQDN strings, and SIP domain name strings.

SIP Transport Protocol

Select the SIP transport protocol from [UDP] or [TCP].

Note

- Select [UDP] when you use a SIP server manufactured by Cisco Systems, Inc.

Enable SIP Server

Select whether or not to enable a SIP server.

SIP Server IP Address Resolution

Specify a method for obtaining the IP address for the SIP proxy server and the SIP registrar server.

Note

- Even when IP addresses can be resolved automatically using [DHCP] or [DHCP v6], port number, login user name, login password, and server type cannot be resolved automatically. Configure these items manually.
- When you select [DHCP] to automatically obtain the IP address, select [DHCP] or [DHCP/AutoIP] for [IPv4 - IP Address Resolution] of the TCP/ IP settings of the machine.
- If an IP address is resolved automatically, the same IP address is assigned to both a proxy server and a registrar server. If you use different IP addresses for the proxy server and the registrar server, configure the IP addresses manually. If multiple IP addresses are resolved automatically, assign the first IP address to a primary proxy/registrar server and the second to a secondary proxy/registrar server. The third and subsequent addresses are not used.
- Even when the IP address is resolved automatically, the port number, login user name, login password, and server type cannot be automatically obtained. Set these manually.

■ DHCP

The SIP proxy server IP address and the SIP registrar server IP address will be automatically retrieved from DHCP.

■ DHCP v6

The IPv6 address for the SIP proxy server and the IPv6 address for the SIP registrar server will be automatically retrieved from the DHCPv6 server.

■ STATIC

Allows you to manually enter the IP addresses for the SIP proxy server and the SIP registrar server.

SIP Proxy Server Setup

Configure SIP proxy server settings. You can set a primary server and a secondary server.

Note

- You can use up to two SIP proxy servers.
- Select [Cisco] for a server type.

■ Primary Server - IP Address

Enter the IP address of the primary server. Up to 255 characters are allowed. You can specify the addresses by IPv4 address, IPv6 address, and FQDN.

■ Primary Server - Port Number

Set the primary server port number from 1 to 65535.

The default value is 5060.

■ Primary Server - Login User Name

Enter the login user name of the primary server. Up to 31 characters are allowed.

■ Primary Server - Login Password

Enter the login password of the primary server. Up to 31 characters are allowed.

■ Primary Server Type

Select the type of primary server from [Standard] or [Cisco].

■ Secondary Server - IP Address

Enter the IP address of the secondary server. Up to 255 characters are allowed. You can specify the addresses by IPv4 address, IPv6 address, and FQDN.

■ Secondary Server - Port Number

Set the secondary server port number from 1 to 65535.

The default value is 5060.

■ Secondary Server - Login User Name

Enter the login user name of the secondary server. Up to 31 characters are allowed.

■ Secondary Server - Login Password

Enter he login password of the secondary server. Up to 31 characters are allowed.

■ Secondary Server Type

Select the type of secondary server from [Standard] or [Cisco].

SIP Registrar Server Setup

Configure SIP registrar server settings. You can set a primary server and a secondary server.

Note

- You can use up to two SIP registrar servers.
- Select [Cisco] for a server type.

■ Primary Server - IP Address

Enter the IP address of the primary server. Up to 255 characters are allowed. You can specify the addresses by IPv4 address, IPv6 address, and FQDN.

■ Primary Server - Port Number

Set the primary server port number from 1 to 65535.

The default value is 5060.

■ Primary Server - Login User Name

Enter the login user name of the primary server. Up to 31 characters are allowed.

■ Primary Server - Login Password

Enter the login password of the primary server. Up to 31 characters are allowed.

■ Primary Server Type

Select the type of primary server from [Standard] or [Cisco].

■ Secondary Server - IP Address

Enter the IP address of the secondary server. Up to 255 characters are allowed. You can specify the addresses by IPv4 address, IPv6 address, and FQDN.

■ Secondary Server - Port Number

Set the secondary server port number from 1 to 65535.

The default value is 5060.

■ Secondary Server - Login User Name

Enter the login user name of the secondary server. Up to 31 characters are allowed.

■ Secondary Server - Login Password

Enter the login password of the secondary server. Up to 31 characters are allowed.

■ Secondary Server Type

Select the type of secondary server from [Standard] or [Cisco].

VoIP Gateway Setup

You can configure the following settings for VoIP Gateway 1 to 50.

You can also configure different VoIP gateways by a recipient's telephone number.

Note

- To use a fixed VoIP gateway, do not register the ID, and specify only the IP address for VoIP Gateway 1.
- You cannot use a VoIP gateway in an IPv6 network.

■ ID

Specify a number to identify the recipients' telephone numbers.

If you specify "03", this VoIP gateway is used for the telephone numbers beginning with "03" such as "0312345678" and "0312345679".

Note

- If you specify a specific telephone number, specify the entire telephone number such as "0312345678".

■ Gateway Address

Enter the IP address of the VoIP gateway.

T.38 Settings

Configure the settings for T.38.

T.38 Transport Protocol

Select T.38 transport protocol from [TCP] or [UDP].

Note

- When you use VoIP gateway manufactured by Cisco Systems, Inc., select [UDP].

UDPTL Listening Port Number

Set the UDPTL listening port number from 1 to 65535.

Important

- Do not use any numbers assigned to other ports.

TCP Listening Port Number

Set the TCP listening port number from 1 to 65535.

Important

- Do not use any numbers assigned to other ports.

RTP Listening Port Number

Set the RTP listening port number from 1 to 65535.

Important

- Do not use any numbers assigned to other ports.

Prioritize IP Packets / Prioritize IP Packets (Ethernet 1), Prioritize IP Packets (Ethernet 2)

Set the priority of IP packet transmission from 0 to 255.

Note

- The value set varies depending on your environment. Consult your network administrator.
- Set the value already specified by the network side. If you set other values, the priority does not change.

  (For most of Cisco® routers, speech traffic is set to 184(ef). If you change the value, consult your network administrator.)
- The title of this setting item differs depending on the Ethernet interface configuration: When single Ethernet interface is used, [Prioritize IP Packets] is displayed. When two Ethernet interfaces are used, [Prioritize IP Packets (Ethernet 1)] and [Prioritize IP Packets (Ethernet 2)] are displayed.
- When any interface names are specified in [Ethernet1 - Network Name] and [Ethernet2 - Network Name], the specified names are displayed instead of "Ethernet1" and "Ethernet2" of [Prioritize IP Packets (Ethernet 1)] and [Prioritize IP Packets (Ethernet 2)] respectively.

Outgoing/Incoming E-mail Settings

Set e-mail transmission and reception settings.

POP3 Server Settings

Set the POP3 server. In [POP3 Server Settings], you can set the following items:

Note

- For IPv4, enter the address in the format "xxx.xxx.xxx.xxx", where "xxx" is a numeric value from 0 to 255.
- For IPv6, enter the address in the format "xxxx:xxxx:xxxx:xxxx:xxxx:xxxx:xxxx:xxxx", where "xxxx" is a hexadecimal value.
- When you make an entry mistake, press the <C> (Clear) button and enter again.

■ Server Name/IP Address

Enter a server name or IP address with up to 128 characters, and then select [Save].

■ Port Number

Enter a port number from 1 to 65535.

The default value is 110.

Important

- Do not use the numbers assigned to the other ports.

■ Polling Interval

Set the interval for checking the e-mail on the POP3 server from 1 to 120 minutes in 1 minute increments.

■ Login Name

Enter the name to login to the POP3 server with up to 64 characters.

■ Password

Enter a password for the POP3 server with up to 64 characters.

Enter the same password in [New Password] and [Retype Password] using the numeric keypad displayed by selecting [Keyboard]. If you do not set the password, leave the text boxes blank and select [Save].

■ POP Password Encryption

Select [On (APOP)] to encrypt the password.

SMTP Server Settings

Set the SMTP server. In [SMTP Server Settings], you can set the following items:

You can check the connection between the machine and the SMTP server by sending a test mail to the e-mail address specified in [Connection Test]. Selecting [Connection Test] > [Print SMTP Comm. Report] outputs the report that shows the contents of protocol of the SMTP communication transmitted and received by the machine.

Note

- For IPv4, enter the address in the format "xxx.xxx.xxx.xxx", where "xxx" is a numeric value from 0 to 255.
- For IPv6, enter the address in the format "xxxx:xxxx:xxxx:xxxx:xxxx:xxxx:xxxx:xxxx", where "xxxx" is a hexadecimal value.
- When you make an entry mistake, press the <C> (Clear) button and enter again.

■ SMTP Server Name/IP Address

Enter a server name or IP address, and then select[Save]. Up to 128 characters are allowed.

■ SMTP Server Port Number

Enter a port number in the range from 1 to 65535.

The default value is 25.

Important

- Do not use the numbers assigned to the other ports.

■ E-mail Send Authentication

Select one from [Off], [POP before SMTP], or [SMTP AUTH].

Note

- If [POP before SMTP] is selected, the POP3 settings must be set.
- AUTH GSSAPI (only for Kerberos), AUTH NTLMv2, AUTH NTLMv1, AUTH PLAIN, AUTH-LOGIN, or AUTH CRAM-MD5 can be used as an authentication method.

■ Login Credentials for E-mail Send

Select the login user name when sending e-mails from [Remotely Authenticated User] and [System].

When [Remotely Authenticated User] is selected and if the machine tries authenticating the remote server before a job startup, the machine performs verification at the time of transmission with the remotely authenticated user name and password. You can also select the post-failure behavior of the machine from [Cancel E-mail Send] and [Relogin using System Data]. If you do not set remote authentication, the machine uses the user ID and passcode of the machine for authentication.

■ SMTP AUTH Login Name

Enter the user name for verification purposes at the SMTP server with up to 64 characters.

■ SMTP AUTH Password

Enter the password for verification purposes at the SMTP server. Up to 64 single-byte characters are allowed.

Note

- If you do not set the password, leave the text boxes blank and select [Save].

Remote Authentication/Directory Service

You can make the settings for the remote authentication server and directory service.

Authentication System Setup

■ Authentication System

Allows you to select the authentication system from [Kerberos (Windows2000)], [Kerberos (Solaris)], [LDAP], [SMB].

After you change the authentication system, folders and job flow sheets used with the previous authentication system are not deleted automatically. If these folders or job flow sheets are no longer needed, delete them from the machine. If the same user IDs are also used on the new authentication system, folders and job flow sheets can be used by the same users.

■ Server Response Time-Out

Set the server time-out response between 1 and 75 seconds in 1 second increments.

■ Search Time-Out

Set the user information search time-out between 1 and 120 seconds in 1 second increments.

Kerberos Server Settings

Configure the Kerberos Servers 1 to 5.

The settings in [Kerberos Server 1 (Default)] will be the default settings for authentication.

■ Primary Server Name/Address

Enter the primary server name or IP address.

Note

- For IPv4, enter the address in the format "xxx.xxx.xxx.xxx", where "xxx" is a numeric value from 0 to 255.
- For IPv6, enter the address in the format "xxxx:xxxx:xxxx:xxxx:xxxx:xxxx:xxxx:xxxx", where "xxxx" is a hexadecimal value.

■ Primary Server - Port Number

Set the primary server port number from 1 to 65535.

The default value is 88.

Important

- Do not use the numbers assigned to the other ports.

■ Secondary Server Name/Address

Enter the secondary server name or IP address.

Note

- For IPv4, enter the address in the format "xxx.xxx.xxx.xxx", where "xxx" is a numeric value from 0 to 255.
- For IPv6, enter the address in the format "xxxx:xxxx:xxxx:xxxx:xxxx:xxxx:xxxx:xxxx", where "xxxx" is a hexadecimal value.

■ Secondary Server - Port Number

Set the secondary server port number in the range from 1 to 65535.

The default value is 88.

Important

- Do not use the numbers assigned to the other ports.

■ Domain Name

When you use Active Directory of Windows 2000 Server, Windows Server® 2003, Windows Server 2008, or Windows Server 2012 as server, specify the domain name of Active Directory in [Domain Name]. Up to 64 characters are allowed.

Important

- Enter a realm name in uppercase characters. Otherwise, an authentication error occurs.

■ Server Certificate Verification

Select whether or not to verify a server certificate.

LDAP Server/Directory Service Settings

Configure the directory server, authentication method, and search attributes and ranges for LDAP authentication and the Address Book search by LDAP.

You can check the connection to the server by selecting [Connection Test]. Selecting [Connection Test] > [LDAP Communication Report] outputs the report that shows the contents of protocol of the LDAP communication transmitted and received by the machine.

■ Primary Server Name/Address

Enter the primary server name or IP address.

Note

- For IPv4, enter the address in the format "xxx.xxx.xxx.xxx", where "xxx" is a numeric value from 0 to 255.
- For IPv6, enter the address in the format "xxxx:xxxx:xxxx:xxxx:xxxx:xxxx:xxxx:xxxx", where "xxxx" is a hexadecimal value.

■ Primary Server - Port Number

Set the Primary server port number from 1 to 65535.

The default value is 389.

Important

- Do not use the numbers assigned to the other ports.

■ Secondary Server Name/Address

Enter the secondary server name or IP address.

Note

- For IPv4, enter the address in the format "xxx.xxx.xxx.xxx", where "xxx" is a numeric value 0 to 255.
- For IPv6, enter the address in the format "xxxx:xxxx:xxxx:xxxx:xxxx:xxxx:xxxx:xxxx", where "xxxx" is a hexadecimal value.

■ Secondary Server - Port Number

Set the secondary server port number from 1 to 65535.

The default value is 389.

Important

- Do not use the numbers assigned to the other ports.

■ Authentication Method

Select a method to perform LDAP authentication from [Direct Authentication] and [Authentication of User Attributes].

■ Direct Authentication

User ID and password entered by a user are used for LDAP authentication.

■ Authentication of User Attributes

The user ID entered is used as an attribute specified in [Attribute of Typed User Name] to perform a search on the LDAP server. [Attribute of Login User Name] of a user found through the search is used as the user ID of a job and the owner of a job flow sheet and a folder.

■ Attribute of Typed User Name

When [Authentication of User Attributes] is used for LDAP authentication, set the attribute of the user ID entered. Up to 32 characters are allowed.

Set the attribute of the User Attribute information registered on the LDAP server that corresponds to the value to be entered as the user name from the control panel. For example, when you want a user to enter the mail address, set "mail."

■ Attribute of Login User Name

Enter an attribute to be used for LDAP authentication using User Attribute information registered on the LDAP server. Up to 32 characters are allowed.

■ Use Added Text String

Select whether or not to automatically add text strings in [Text String Added to User Name] when you enter the authentication information from the control panel.

■ Text String Added to User Name

Enter text strings for [Text String Added to User Name] when you use additional text strings. Up to 64 characters are allowed.

When [Use Added Text String] is set to [Enabled], enter the corresponding fixed text string.

For Example:

When "mail" is set for[Attribute of Typed User Name] and the information registered for the target user is "mail@myhost.example.com," you will need to enter mail@myhost.example.com".

However, if [Use Added Text String] is set to[Enabled]and "@myhost.example.com" is specified for [Text String Added to User Name], you will only need to enter "mail" from the control panel because the machine adds "@myhost.example.com" to the end of the string.

■ Attribute of Smart Card

When a smart card is used for LDAP authentication, set the attribute of the card ID to perform a search on the LDAP server to authenticate the user who has the card. Up to 32 characters are allowed.

■ Network User ID Attribute

When a smart card is used for LDAP authentication, set the attribute of the user name to be used for a smart card ID search. The user name is given to the remote service as the authentication information. Up to 32 characters are allowed.

■ Login Credentials to Search Entries

Select which users are allowed to search the Address Book.

You can select from [Remotely Authenticated User] and [System].

■ Login Name

Set a user name for the Address Book search and access to the directory server using [Authentication of User Attributes] method for LDAP authentication.

Set this item only when authentication is required for the search for the directory service. Up to 255 characters are allowed.

■ Password

Set a login password for the user specified in [Login Name]. Up to 32 characters are allowed.

■ Search Directory Root

Enter a search root character string with up to 255 characters.

■ Scope of Search from Root Entry

Select the search range from the root entry.

◆ Root entry only

Searches the root level only.

◆ One level below root entry only

Searches from the root level to one level below the root level.

◆ All levels below root entry

Searches from the root level to all lower levels below the root level.

■ Object Class of Search Target

Enter the object class to search with up to 32 characters.

■ LDAP Referrals

Specify whether or not to re-establish connection to another LDAP server if a currently connected LDAP server requests to do so.

■ LDAP Referral Hop Limit

When using the Referral feature, specify how many times that a user is allowed to hop servers within 1 to 5 times.

■ LDAP Server

Select the software used by the directory server from [Microsoft Active Directory], [Microsoft Exchange], [IBM Lotus Domino 6.*], and [Other Applications].

■ Search Entries by Common Name

Set whether or not to use [Attribute Type of Name] as a search entry when a name is used as a search key.

■ Search Entries by Surname

Set whether or not to use [Attribute Type of Surname] when a name is used as a search key.

■ Search Entries by Given Name

Set whether or not to use [Attribute Type of Given Name] when a name is used as a search key.

■ Attribute Type of Name

Set the recipient name attribute type. Enter a field attribute name to be used as a recipient name from user information registered on the LDAP server. Up to 32 characters are allowed. For Windows, enter "cn" for an attribute name used as a recipient name.

■ Attribute Type of Surname

Set the sender's family name attribute type. Up to 32 characters are allowed.

■ Attribute Type of Given Name

Set the sender's first name attribute type. Up to 32 characters are allowed.

■ Attribute Type of E-mail Address

Set the e-mail address attribute type. Enter a field attribute name to be used as e-mail information from the user information registered on the LDAP server. Up to 32 characters are allowed. For Windows, enter "mail" for an attribute name used as e-mail information.

■ Attribute Type of Fax Number

Set the fax number attribute type. Up to 32 characters are allowed.

■ Attribute Type of IP Fax (SIP) Number

Set a field attribute name that is used as IP fax (SIP) number information from the user information registered on the LDAP server. Up to 32 characters are allowed.

■ Attribute Type of E-mail (Internet Fax)

Set the Internet fax address attribute type. Up to 32 characters are allowed.

■ Attribute Type of Custom Items 1, 2, and 3

Set the LDAP attribute type of custom items 1 to 3. In addition to [Attribute Type of Name] and [Attribute Type of E-mail Address], you can assign user attributes registered on the LDAP server for a search. Up to 32 characters are allowed.

■ Attribute Name of Custom Items 1, 2, and 3

Set the attribute names assigned to custom items 1 to 3. Up to 16 single-byte characters are allowed.

Note

- To encrypt communications using this feature, a trusted root certificate authority and all intermediate certificate authorities that are registered in the path of a certificate to use must be registered.

■ Attribute Type of Certificate

Set the certificate attribute type. Select and enter the field name to use as a certificate from among the user information registered on the LDAP server. Up to 32 single-byte characters are allowed.

For Windows, enter "userCertificate;binary" for an attribute name used as certificate information. The information is used as an S/MIME certificate when you specify an address using the directory service to encrypt e-mail transmission by S/MIME.

Note

- To encrypt communications using this feature, a trusted root certificate authority and all intermediate certificate authorities that are registered in the path of a certificate to use must be registered.

■ Maximum Number of Search Results

Set a maximum number of address to display from search results from 5 to 100. If the search results exceed the maximum, the search stops at the maximum number set.

The default value is 50.

■ Search Time-Out

Select whether or not to set a search time-out. Set the value from 5 to 120 seconds in 1 second increments.

SMB Server Settings

Set the following items to use SMB server as a remote authentication server.

■ SMB Server Setup

Select the server specification method from [By Domain Name] and [By Domain & Server Names/IP Address].

According to the option you selected here, set [Domain Name] and [Server Name/IP Address] for SMB servers 1 to 5 respectively.

The setting for SMB server 1 is used as the default setting for authentication.

■ Domain Name

Enter the domain name of the server. Up to 64 characters are allowed.

This setting is mandatory regardless of the SMB server specification method selected for [SMB Server Setup].

Important

- Use the NetBIOS or Active Directory domain name for the domain name.

■ Server Name/IP Address

Enter the server name or IP address.

This setting is valid when [SMB Server Setup] is set to [By Domain & Server Names/IP Address].

Important

- Use the NetBIOS computer name or full computer name with DNS suffix for the server name.
- For IPv4, enter the address in the format "xxx.xxx.xxx.xxx", where "xxx" is a numeric value from 0 to 255.

Security Settings

Set the security settings.

SSL/TLS Settings

Configure the SSL/TLS settings to encrypt the communication between the server or the client computer and the machine. Enabling SSL/TLS protects the communication from an unauthorized access and prevents information leakage or data falsification.

■ Device Certificate - Server

Select a certificate for HTTP SSL/TLS communications.

■ HTTP - SSL/TLS Communication

Select whether or not to enable HTTP SSL/TLS communications.

■ HTTP - SSL/TLS Port Number

Set the port number used for HTTP SSL/TLS communication from 1 to 65535.

The default value is 443.

Important

- Do not use the numbers assigned to the other ports.

■ LDAP - SSL/TLS Communication

Set whether or not to enable the SSL/TLS communications for authentication and searches.

If you enable the LDAP SSL/TLS communications, you must set [Primary Server - Port Number] and [Secondary Server - Port Number] under [LDAP Server/Directory Service Settings].

The port number for SSL/TLS communications of the LDAP directory server is normally set to 636.

■ SMTP-SSL/TLS Communication

Configure the SSL/TLS communications.

Note

- The Internet Fax Direct (P2P) feature does not support SMTP-SSL/TLS communication.

◆ Disabled

The machine does not communicate in SSL/TLS.

◆ STARTTLS (If Available)

The machine verifies the certificate and communicates in SSL/TLS. If the verification fails, the machine does not communicate in SSL/TLS.

◆ STARTTLS

The machine verifies the certificate and communicates in SSL/TLS. If the verification fails, the machine cannot perform communication.

◆ SSL/TLS

The machine communicates in SSL/TLS.

■ ThinPrint-SSL/TLS Communication

Select whether or not to enable the SSL/TLS communications.

■ Device Certificate - Client

Select a certificate for HTTP SSL/TLS communications.

■ Verify Remote Server Certificate

When the machine is operated as an SSL client, select whether or not to verify the certificate of the remote server.

S/MIME Settings

Configure the S/MIME settings to use encryption or signature option on the transmission of e-mail or fax.

■ Device Certificate - S/MIME

Select a certificate for S/MIME communications.

Reference

- For more information on the certificate, refer to "Encryption and Digital Signature Settings" (P.405).

■ S/MIME Communication

Select whether or not to enable S/MIME communications.

■ Receive Untrusted E-mail

If you select [No], the machine does not receive the following e-mail:

- E-mails other than e-mail sent by S/MIME when [S/MIME Communication] is set to [Enabled].
- E-mails that fail to attach a signature or verification.
- E-mails that are attached with an expired certificate.

■ Receive Untrusted Internet Fax

If you select [No], the machine does not receive the following Internet fax:

- Internet faxes other than the Internet fax sent by S/MIME when [S/MIME Communication] is set to [Enabled].
- Internet faxes that fail to attach a signature or verification.
- Internet faxes that are attached with an expired certificate.

■ Message Digest Algorithm

Select a message digest algorithm. Select from [SHA-1], [MD5] and [SHA-256].

■ Message Encryption Method

Set the encryption method for mail contents. Select from [3DES], [RC2-40], [RC2-64], [RC2-128], [AES-128], [AES-192], and [AES-256].

■ Split Encrypted E-mail

Select whether or not to split an outgoing encrypted e-mail for each recipient.

■ Split Encrypted Internet Fax

Select whether or not to split an outgoing encrypted Internet fax for each recipient.

■ Digital Signature - Outgoing E-mail

Select whether or not to always add a digital signature to outgoing e-mails. You can also select the setting in which the machine asks to add a digital signature to the e-mail whenever you send.

■ Signing Certificate for E-mail Attachment

Select the certificate to use for attaching a signature to e-mails.

■ Digital Signature - Outgoing Internet Fax

Select whether or not to always add a digital signature to outgoing Internet faxes. You can also select the setting in which the machine asks to add a digital signature to the Internet fax whenever you send.

■ Certificate Auto Store

Select whether or not to automatically store an S/MIME certificate attached with the e-mail when receiving e-mail from an address registered on the Address Book.

PDF/DocuWorks/XPS Signature Settings

Configure signature settings of PDF/DocuWorks/XPS documents.

Note

- XPS stands for XML Paper Specification.

■ Device Certificate

Select a certificate to use for the signature.

Reference

- For more information on the certificate, refer to "Encryption and Digital Signature Settings" (P.405).

■ PDF Signature

Select the setting for PDF signature from [Do not add signature], [Always add visible signature], [Always add invisible signature], or [Select during send].

■ PDF Signature Hash Algorithm

Select the setting for PDF Signature Hash Algorithm from [SHA-1] or [SHA-256].

■ DocuWorks Signature

Select the setting for DocuWorks signature from [Do not add signature], [Always add signature], or [Select during send].

Important

- The DocuWorks documents with DocuWorks signature are available on the following versions of DocuWorks software.
  - When [SHA-1] is selected: DocuWorks 5.0 or later
  - When [SHA-256] is selected: DocuWorks 8.0 or later

■ DocuWorks Signature Hash Algorithm

Select the setting for the hash algorithm when using DocuWorks signature from [SHA-1] or [SHA-256].

■ XPS Signature

Select the setting for XPS Signature from [Do not add signature], [Always add invisible signature], or [Select during send].

Note

- XPS stands for XML Paper Specification.

IPsec

Note

- This item is not displayed when Secondary Ethernet (optional) is installed on the machine.

■ IPsec Settings

Configure the IPsec settings to use encryption or signature option on the transmission of e-mail or fax.

Note

- For [IKE Authentication Method], [Preshared Key], [DH Group], and [PFS Settings], consult your network administrator.

- IKE Authentication Method

  Set the IKE authentication method. Select from [Authenticate by Preshared Key] or [Authenticate by Digital Signature].

- Preshared Key

  Enter a preshared key.

  This setting is valid when [IKE Authentication Method] is set to [Authenticate by Preshared Key].

- Device Certificate

  Select a certificate for IPsec communications.

  Select a certificate when [IKE Authentication Method] is set to [Authenticate by Digital Signature]. A self-signed certificate created by CentreWare Internet Services cannot be used.

Reference

- For more information on a certificate, refer to "Types of Certificate" (P.406).

- IPsec Communication

  Select whether or not to enable IPsec communications.

- IKE SA Life Time

  Specify IKE SA lifetime from 5 to 28800 minutes in 1 minute increments.

Note

- The value must be greater than the value set in [IPsec SA Life Time].

- IPsec SA Life Time

  Specify IPsec SA lifetime from 300 to 172800 seconds in 1 second increments.

Note

- The value must be smaller than the value set in [IKE SA Life Time].

- DH Group

  Set DH group. Select from [G1] or [G2].

- PFS Settings

  Select whether or not to enable PFS.

- Destination IPv4 Address

  Set the IPv4 address of the destination.

  When entering an IP address, enter the address in the format "xxx.xxx.xxx.xxx", where "xxx" is a numeric value from 0 to 255.

- Destination IPv6 Address

  Set the IPv6 address of the destination.

  When entering an IP address, enter the address in the format "xxxx:xxxx:xxxx:xxxx:xxxx:xxxx:xxxx:xxxx", where "xxxx" is a hexadecimal value.

- Communicate with Non-IPsec Devices

  Select whether or not to communicate with non-IPSec devices.

IEEE 802.1X Settings / IEEE 802.1X Settings (Ethernet 1), IEEE 802.1X Settings (Ethernet 2)

Note

- When both of the [TCP/IP - Network Settings (Ethernet 1)] setting and the [TCP/IP - Network Settings (Ethernet 2)] setting are configured, you can configure individual IEEE802.1X settings for each Ethernet interface.
- The title of this setting item differs depending on the Ethernet interface configuration: When single Ethernet interface is used, [IEEE 802.1X Settings] is displayed. When two Ethernet interfaces are used, [IEEE 802.1X Settings (Ethernet 1)] and [IEEE 802.1X Settings (Ethernet 2)] are displayed.
- When any interface names are specified in [Ethernet1 - Network Name] and [Ethernet2 - Network Name], the specified names are displayed instead of "Ethernet1" and "Ethernet2" of [IEEE 802.1X Settings (Ethernet 1)] and [IEEE 802.1X Settings (Ethernet 2)] respectively.

■ IEEE 802.1x Settings

Configure the IEEE 802.1x settings.

- IEEE 802.1X

  Set whether or not to use IEEE 802.1x authentication.

- Authentication Method

  Select from [EAP-MD5], [EAP-MS-CHAPv2], [PEAP/MS-CHAPv2], or [EAP-TLS].

- Login User Name

  Enter the login user name with up to 128 characters.

- Login Password

  Enter the login password with up to 128 characters.

- Server Certificate Verification

  Select whether or not to verify a server certificate when [PEAP/MS-CHAPv2] is selected in [Authentication Method].

Certificate Revocation Retrieval Settings

Configure the settings for certificate revocation retrieval.

■ Level of Certificate Verification

Select a level of certificate verification from [Low], [Medium], or [High].

Selecting [Low] does not verify the validity of certificates.

Selecting [Medium] verifies the validity of certificates. If a certificate cannot be verified because of a network error or any other problems, the certificate is determined as valid.

Selecting [High] verifies the validity of certificates, and determines only certificates that have not been revoked as valid.

■ Retrieval of Certificate Status

Select the method to verify the validity of certificates.

Select [By Retrieving CRL] if the machine retrieves a CRL (Certificate Revocation List) from the validation authority to verify the revocation status of the certificate. Select [By OCSP] if the machine uses OCSP (Online Certificate Status Protocol), which can verify the validity revocation status of the certificate, to have the certificate authority or validation authority check the revocation status.

■ Auto Retrieval of CRL

Select whether or not to automatically retrieve a CRL.

■ CRL Retrieval Time-Out

Specify a time-out value to retrieve a CRL from 5 to 60 seconds in 1 second increments.

■ Send Query to OCSP Responder With

Select how to access an OCSP responder from [URL as Specified in Certificate] or [URL as Specified by Administrator].

■ URL of OCSP Responder

Enter the URL of an OCSP responder when [URL as Specified by Administrator] has been selected for [Send Query to OCSP Responder With]. Up to 255 characters are allowed.

■ OCSP Communication Time-Out

Specify a time-out value for OCSP communication from 5 to 60 seconds in 1 second increments.

Other Settings

You can set the following network related items.

Protocol to Receive E-mail

Select from [SMTP] and [POP3] depending on your environment.

Add Domain Name to User Name

Select whether or not to add domain names to user names.

Output Destination for E-mail

Specify an output destination for e-mail print. Selecting [Auto] enables the machine to select the output destination, which is set as the default output destination.

Domain Filtering

Set the domain filtering settings for the E-mail, Internet Fax, and IP fax (SIP) features.

■ Domain Filtering

When [Allow Domains] is selected, you can specify domains to permit transmissions. When [Block Domains] is selected, you can specify domains to prohibit transmissions.

■ Domains 1 to 50

When [Domain Filtering] is set to [Allow Domains] or [Block Domains], you can specify up to 50 domains to allow or block transmissions.

Selecting [Change Settings] allows you to enter the domain name using a keyboard displayed with up to 64 characters.

Print Service Settings

In [Print Service Settings], you can configure settings related to the Print feature.

Using CentreWare Internet Services, you can make more detailed settings.

Reference

- For more information, refer to "CentreWare Internet Services Settings" (P.327).

The following shows the reference section for each setting.

"Allocate Memory" (P.227)

"Delete Form" (P.229)

"Register Google Cloud Print" (P.229)

1 On the [Tools] screen, select [System Settings] > [Print Service Settings].

Reference

- For the method of displaying the [Tools] screen, refer to "System Settings Procedure" (P.138).

2 Select an item to set or change.

Allocate Memory

For each interface, set the memory capacity of the receiving buffer (temporary storage for data sent from the client).

You can change the receiving buffer capacity according to its use and purpose.Increasing the receiving buffer capacity may allow a client to be released sooner from an interface.

Important

- If you change the memory capacity, the memory is reset, thus all data stored in memory area is erased.
- You cannot allocate more memory beyond its memory capacity. When you turn the machine on, and the size set exceeds the total memory size, the system automatically adjusts the memory size.

Note

- When a port is set to [Disabled], the corresponding items to the port do not appear.
- Depending on the amount of data sent from the client, increasing the memory capacity may not change the time taken to release the client.

PostScript Memory

Specify a value for the PostScript memory capacity in 0.25 MB increments.

Note

- This feature may not be available depending on the model or your machine configuration. For information, contact out Customer Support Center.
- The maximum amount of memory you can allocate varies according to the amount of free space available in memory.

ART IV, ESC/P, 201H Form Memory

Displays where to save forms for use with ESC/P-K.

Note

- This feature does not appear for some models. An optional component is required. For more information, contact our Customer Support Center.

HP-GL/2 Auto Layout Memory

Set the working memory area when HP-GL/2 auto layout memory is used. When the hard disk is installed, the area is fixed to the hard disk. When the hard disk is not installed, specify the area for working memory.

Job Ticket Memory

Specify the amount of memory to use for job tickets from 0.25 to 8.00 MB in 0.25 MB increments.

Note

- The maximum amount of memory you can allocate varies according to the amount of free space available in memory.

Receiving Buffer - USB

Set the receiving buffer for USB.

You can specify a value from 64 to 1024 KB in 32 KB increments.

Receiving Buffer - LPD

Note

- You may not be able to change the [Receiving Buffer - LPD] setting because of the setting of [LPD Print Queue]. For more information on LPD Print Queue, refer to "LPD Print Queue" (P.234).

■ No Spooling

Does not use spooling. While LPD printing is performed for one client, data cannot be received over the same interface from another client. Specify a value for the dedicated LPD receiving buffer memory capacity from 1024 to 2048 KB in 32 KB increments.

■ Spool to Memory

Carries out spooling. The receiving buffer for spooling uses memory. When this setting is selected, specify the memory capacity of a receiving buffer for spooling from 0.50 MB to 32.00 MB in 0.25 MB increments.

Note that print data exceeding the memory capacity set is not accepted. In such cases, select [Spool to Hard Disk] or [No Spooling].

■ Spool to Hard Disk

Carries out spooling. The receiving buffer for spooling uses the hard disk.

Receiving Buffer - IPP

■ No Spooling

Does not use spooling. While IPP printing is performed for one client, data cannot be received over the same interface from another client.

Specify a value for the dedicated IPP receiving buffer memory capacity from 64 to 1024 KB in 32 KB increments.

■ Spool to Hard Disk

Receiving Buffer - Port 9100

Set the Port 9100 receiving buffer.

Specify a value from 64 to 1024 KB in 32 KB increments.

Delete Form

You can delete registered ESC/P-K forms.

1 Select [Delete Form].

2 Select the print mode to delete forms.

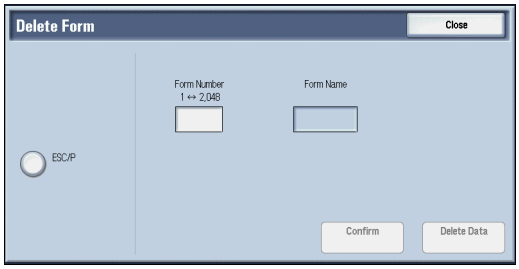

■**ESC/P**

Deletes ESC/P-K emulation forms.

■**Form Number**

When you select an item to delete, you can enter the form number.

■**Form Name**

After you enter the form number and select [Confirm], the form name matching the form number entered appears.

3 Enter the form number with the numeric keypad, and select [Confirm].

4 Check the form name, and then select [Delete Data].

Register Google Cloud Print

This setting is displayed when you register the machine to Google Cloud Print.

Reference

- For more information, refer to the User Guide (For Google Cloud Print).

Other Settings

You can configure other settings related to the paper used in the printer.

Print Area

Set whether or not to expand the print area.

Reference

- For more information about the printable area, refer to "Printable Area" (P.646).
- For more information on the extended printable area, refer to "Extended Printable Area" (P.646).

Substitute Tray

When there is no tray containing the paper size selected by the Auto Paper selection, select whether or not to print with paper loaded in another paper tray. In the event of using a

substitute tray, select the paper size from [Use Larger Size], [Use Closest Size], or [Select Tray 5].

Note

- When documents are printed using emulation such as ESC/P-K and HP-GL/2, the substitute tray setting is not valid and a message prompting you to load paper displayed on the screen.

■ Display Message

Does not use a substitute tray, but displays a paper loading message.

■ Use Larger Size

Switches to the next larger size of paper than previously selected and prints at the same magnification.

■ Use Closest Size

Switches to the closest size of paper to previously selected and prints. If necessary, the image is automatically reduced in size on the paper.

Note

- If there is a client specification, the client specification is prioritized.

■ Select Tray 5

Prints using the paper loaded in Tray 5.

Paper Type Mismatch

Set an action to take when the paper type loaded in the paper tray does not match the paper type specified when a print job is submitted.

■ Print

Prints using the paper loaded in the tray.

■ Display Confirmation Screen

A confirmation screen appears to ask whether or not to print the job.

If a paper type mismatch occurs during printing, the machine ignores the paper type specified and prints the job in accordance with [Paper Tray Priority], [Paper Size], or [Substitute Tray].

Reference

- For more information, refer to "Automatic Tray Selection" (P.66).

■ Display Paper Supply Screen

Load another type of paper in the selected tray by following the message displayed on the touch screen, and then select the [Start] button. The machine changes the paper type setting for the tray and prints the job.

Important

- The machine keeps the changed paper type setting after the printing.
- Even if you select the [Start] button without loading another type of paper in the selected tray, the machine considers the paper type has been changed and prints the job. Consequently, the print quality cannot be guaranteed because the paper type loaded in the paper tray does not match the paper type specified.

Unregistered Forms

Set whether or not to print a job if a form specified for printing in a form data file (overlay printing) is not registered on the machine. If you specify [Print], only the data is printed because the specified form is not present.

Note

- This setting works only when the emulation feature is used.

Resume Job After Print Error

Set whether or not to automatically cancel a print job when the print job was suspended because of an error.

Note

- The machine will enter the off-line state to restrict subsequent print jobs.

■ Job Resumes Automatically

Automatically cancels the print job to print subsequent jobs.

■ Resume by User

Displays a confirmation screen before cancelling the print job. After the confirmation, the machine cancels the print job to print the subsequent jobs.

Important

- When [Resume by User] is selected, pressing the <Interrupt> button to suspend printing temporarily will not work.

When Paper Jam Occurs

Specify how the machine handles print jobs after a paper jam is cleared.

■ Resume Job after Jam Clearance

When a paper jam is cleared, the machine automatically resumes printing from the next page of the page which was output correctly.

■ Delete Job

The machine cancels printing and removes the print job.

Note

- For print files stored in a folder such as Charge Print, Private Charge Print, Secure Print, and Sample Print, the machine resumes printing after the paper jam is cleared.

Print User ID

When printing using a print driver, specify whether or not to print user ID set in the print driver on paper. The first 64 letters of the user ID are printed.

Select a position to print from [Top Left], [Top Right], [Bottom Left], and [Bottom Right].

Note

- To use the Print user ID feature, the user ID must be set in the print driver beforehand. For more information, refer to the help of the print driver.
- When user ID set in the print driver is not available, "Unknown User" is printed.

Banner Sheet

You can output a banner sheet to separate different jobs by users not to be mixed the outputs. The machine outputs the banner sheet before or after the job.

A date, time, user name, and file name are printed on the banner sheet.

Note

- Even if stapling is selected, banner sheets are not stapled.
- When a document is printed from a Macintosh, the document name is not printed on the banner sheet.
- When printed, banner sheets are counted by meter.

■ Off

Does not print banner sheets.

■ Start Sheet

Prints a banner sheet before a print job.

■ End Sheet

Prints a banner sheet after a print job.

■ Start Sheet & End Sheet

Prints a banner sheet before and after a print job.

■ Allow Print Driver to Override

Select the check box to print a banner sheet according to the banner sheet print settings of the print driver.

Banner Sheet Offset

Set whether or not to offset when banner sheets are output.

Banner Sheet Tray

Select a paper tray used for banner sheets.

This setting applies to Trays 1 to 4. You cannot apply this setting to Tray 5.

PostScript Default Color

Set the default value for Post Script output color.

Note

- This feature does not appear for some models. An optional component is required. For more information, contact our Customer Support Center.

PostScript Paper Supply

Select whether the PostScript Deferred Media Selection feature is enabled or disabled when the paper tray is selected. Select [Auto Select] to enable the PostScript Deferred Media Selection feature, or [Select Paper Tray] to disable the feature.

When PostScript data generated by other than the print driver is printed, the tray is not selected as intended depending on the description method of the PostScript data. In this case, select [Select Paper Tray].

Note

- Even when you select [Auto Select], the setting is automatically changed to [Select Paper Tray] when [Use Larger Size] or [Use Closest Size] is selected for [Substitute Tray] and print PostScript data.
- This feature does not appear for some models. An optional component is required. For more information, contact our Customer Support Center.

PostScript Font Absence

Set an action to take when a PostScript font specified in a job is not present.

Note

- This feature does not appear for some models. An optional component is required. For more information, contact our Customer Support Center.

■ Cancel Printing

Cancels printing.

■ Substitute Font and Print

Prints using a substitute font. Courier is used as the substitute font.

PostScript Font Substitution

Set whether or not to use ATCx as a substitute if a PostScript font specified in a job is not present.

Note

- This feature does not appear for some models. An optional component is required. For more information, contact our Customer Support Center.

XPS Print Ticket Processing

Set how the machine processes the print tickets written in XPS documents.

Note

- XPS stands for XML Paper Specification.

■ Off

Does not process print tickets.

■ Standard Mode

Uses the standard mode to process print tickets.

■ Compatible Mode

Uses the Microsoft®-compliant mode to process print tickets.

LPD Print Queue

Set the LPD print sequence.

Note

- If you change the [LPD Print Queue] setting, the [Receiving Buffer - LPD] setting may automatically be changed. For more information on Receiving Buffer - LPD Spool, refer to "Receiving Buffer - LPD" (P.228).

■ Data Processing Order

Prints jobs in the order of becoming print-ready status after receiving the jobs.

If you instruct the machine to print jobs of multiple documents continuously, the machine may preferentially print a job which was sent later depending on the time for data processing.

■ Job Submission Order

Prints jobs in the order of lpr print submission.

Important

- This setting is valid only when [Receiving Buffer - LPD] is set to [Spool to Hard Disk]. When any other setting, printing is performed in [Data Processing Order].

OCR Font Glyphs (0 x 5C)

Allows you to select [Backslash] or [Japanese Yen Sign] to print 0x5C character when the OCR fonts are used.

Scan Service Settings

In [Scan Service Settings], you can configure settings related to the Scan services.

Note

- This feature does not appear for some models. The items displayed on the screen vary depending on the optional components installed. For more information, contact our Customer Support Center.
- When [Scan to Fax Server] is selected in the System Settings, [Scan Service Settings] is replaced with [Scan/ Fax Service Settings].

Reference

- For information on scanner environment settings, refer to "Scanner Environment Settings" (P.359).

The following shows the reference section for each setting.

"Screen Defaults" (P.235)

"Scan Defaults" (P.236)

"Scan to PC Defaults" (P.239)

"Original Size Defaults" (P.240)

"Output Size Defaults" (P.240)

"Reduce/Enlarge Presets" (P.241)

"Other Settings" (P.241)

1. On the [Tools] screen, select [System Settings] > [Scan Service Settings].

   Reference

   - For the method of displaying the [Tools] screen, refer to "System Settings Procedure" (P.138).

2. Select an item to set or change.

Screen Defaults

You can set the items that appear in the First Tab screen. The First Tab means thescreen displayed when you select the following tabs in the [E-mail], [Store to Folder], [Scan to PC], [Store & Send Link], and [Store to USB] screens.

You can set the items that appear in the First Tab screen. The First Tab means the screen displayed when you select the following tabs in the [E-mail], [Store to Folder], [Network Scanning], [Scan to PC], [Store & Send Link], and [Store to USB] screens.

- The [E-mail] tab of the E-mail service
- The [Store to Folder] tab of the Store to Folder service
- The [Network Scanning] tab of the Network Scanning service
- The [Scan to PC] tab of the Scan to PC service
- The [Store & Send Link] tab of the Store & Send Link service
- The [Store to USB] tab of the Store to USB service

Note

- This feature may not be available depending on the model or your machine configuration. For information, contact out Customer Support Center.

Email Screen Default

Set the default screen that appears when [E-mail] on the Services Home screen is selected. Select from [First Tab] and [Address Book].

Scan to PC Screen Default

Set the default screen that appears when [Scan to PC] on the Services Home screen is selected. Select from [First Tab] and [Address Book].

1st Tab - Features Allocation

You can set the features that appear in the second to the fourth column of the lower part in the First Tab screen.

Select a column by choosing from [Feature in 1st Column] to [Feature in 4th Column].

And set the item to be displayed from [Not Selected], [Color Scanning], [2 Sided Scanning], [Original Type], [File Format], [Resolution], [Lighten / Darken], [Reduce / Enlarge], [Mixed Size Originals], and [Original Orientation].

[2 Sided Scanning] and [Mixed Size Originals] are not displayed on the screen for the models without the document feeder.

Reduce/Enlarge - Buttons 2 to 5

This item can be set when [Reduce/Enlarge] is selected for one of thefeatures that appear in the second to the fourth column in [1st Tab - Features Allocation].

Select the magnification ratio displayed in [Reduce/Enlarge] from the Reduce/Enlarge Presets registered.

Reference

- For information on Reduce/Enlarge Preset buttons, refer to "Reduce/Enlarge Presets" (P.241).

Scan Defaults

You can set the default settings of the Scan services. When the machine is turned on, or the machine exits the Power Saver mode, or when the <Clear All> button is pressed, the machine resets to the default values set here. Setting frequently used features and values as the defaults can avoid extra operations required during the use of the machine.

The values set here become valid after the machine turned off and then on.

Reference

- For more information on each setting item, refer to "Scan" in the User Guide.

Color Scanning

Set the default value for [Color Scanning] in the First Tab.

Original Type

Set the default value for [Original Type] in the First Tab.

File Format

Set the default value for [File Format] in the First Tab.

Optimize PDF For Quick Web View

Set the default value for [Optimize For Quick Web View] of [File Format] in the First Tab.

Thumbnail - Outgoing E-mail

For the E-mail feature, set the default value for [Add Thumbnail] when [DocuWorks] or [XPS] is selected for [File Format] in the First Tab.

Note

- XPS stands for XML Paper Specification.

Thumbnail - Scan to PC

For the Scan to PC feature, set the default value for [Add Thumbnail] when [DocuWorks] or [XPS] in selected for [File Format] in the First Tab.

Note

- XPS stands for XML Paper Specification.

Preview

Set whether or not to place a check mark in the [Preview] checkbox of the First Tab by default.

Lighten/Darken

Set the default value for [Lighten/Darken] of [Image Options] in the [Advanced Settings] screen.

Contrast

Set the default value for [Contrast] of [Image Enhancement] in the [Advanced Settings] screen. The contrast setting is valid when [Color Scanning] is set to [Color] or [Grayscale].

Sharpness

Set the default value for [Sharpness] of [Image Options] in the [Advanced Settings] screen.

Background Suppression

This feature allows you to suppress the background color of documents.

Set the default value for [Background Suppression] of [Image Enhancement] in the [Advanced Settings] screen.

Shadow Suppression

Set the default value for [Shadow Suppression] in the [Advanced Settings] screen.

Color Space

Set the default value for [Color Space] in the [Advanced Settings] screen.

Important

- When [Device Color Space] is selected as default and "Color Space" (P.242) is set to [Disabled], [Auto Detect] of [Color Scanning] in the First Tab does not appear. In addition, when the High Compression Image Kit (optional) is installed to the machine, [MRC High Compression] and [Specific Color] under [File Format] is not displayed either.

Original Orientation

Set the default value for [Original Orientation] in the [Layout Adjustment] screen.

Resolution

Set the default value for [Resolution] in the [Layout Adjustment] screen.

You can select from [200 dpi], [300 dpi], [400 dpi], and [600 dpi].

Mixed Size Originals

Set the default value for [Mixed Size Originals] in the [Layout Adjustment] screen.

Edge Erase

Set the default value for [Edge Erase] in the [Layout Adjustment] screen. You can select from [All Edges] and [Parallel Edges].

Edge Erase - Top & Bottom Edges

Set the default value for [Top & Bottom] in [Edge Erase] in the [Layout Adjustment] screen.

Specify a value from 0 to 50 mm in 1 mm increments.

Edge Erase - Left & Right Edges

Set the default value for [Left & Right] in [Edge Erase] in the [Layout Adjustment] screen.

Specify a value from 0 to 50 mm in 1 mm increments.

Center Erase/Binding Edge Erase

Set the default value for [Center] in [Edge Erase] in the [Layout Adjustment] screen.

Specify a value from 0 to 50 mm in 1 mm increments.

Quality/File Size

Set the default value for [Quality/File Size] in the [Filling Options] screen.

Select from [Quality: Normal/File Size: Small], [Quality: Higher +1/File Size: Larger +1], [Quality: Higher +2/File Size: Larger +2], [Quality: Higher +3/File Size: Larger +3], and [Quality: Maximum/File Size: Largest].

E-mail Subject

Set the default value for the e-mail subject. Up to 128 characters can be entered for the subject.

Store & Send Link - E-mail Subject

Set the default value for the subject used when sending an e-mail to an authenticated user to notify the URL of the location to retrieve the scanned data. Up to 128 characters can be entered for the subject.

Note

- This feature may not be available depending on the model or your machine configuration. For information, contact out Customer Support Center.

Reference

- For more information on the Store & Send Link feature, refer to "Scan" > "Scanning Procedure" > "Step 2 Selecting the Features" in the User Guide.

E-mail Encryption

Set the default value for [Encryption] in the [E-mail Options] in the [E-mail] screen.

Note

- This feature appears only when the root certificate for a remote server for remote authentication is set.

Searchable Text

Set the default value for [Searchable Text] in the [File Format] screen under the First Tab.

Note

- This feature does not appear for some models. An optional component is required. For more information, contact our Customer Support Center.

Language of the Original

Set the default language to identify the text on a document.

Note

- To enable the machine to recognize both English and double-byte character languages (Japanese, Korean, Traditional Chinese, or Simplified Chinese) in a document containing both languages, select the double-byte character language in [Language of the Original], and also select [300 dpi] in [Resolution] when scanning a document. English characters, however, may have the lower recognition rate than when [English] is selected in [Language of the Original].
- This feature does not appear for some models. An optional component is required. For more information, contact our Customer Support Center.

Searchable - Text Compression

Set whether or not to compress searchable text when using the OCR feature.

Note

- This feature does not appear for some models. An optional component is required. For more information, contact our Customer Support Center.

Scan to PC Defaults

Transfer Protocol

Set the default value for the transfer protocol used for transfer from [FTP], [SMB], or [SMB (UNC Format)].

Login Credential to Access Destination

Set whether or not to use a user authenticated by the remote server when the user logs in to the destination computer for the Scan to PC service. This setting is effective for remote authentication.

■ None

Does not use the remotely authenticated user.

■ Remotely Authenticated User

Uses the user name and the password of the remotely authenticated user for login.

User Name for FTP Scan

When the remotely authenticated user name is used as a login user name for FTP transfers for the Scan to PC service, specify whether or not to include the domain part of the credentials.

■ User Name Only

Uses only the user name part (before "@") of the login credential for the login name. The domain part is not used.

■ Add Domain Name

Uses the full login credential name, including the domain name (after "@"), for the user name.

Original Size Defaults

Set the document size displayed in [Original Size] in the [Layout Adjustment] screen. You can assign a document size to each of the 17 buttons other than [Auto Detect].

If you frequently use non-standard size paper for scanning, assigning the paper sizes to the buttons will save your time to specify the size each time.

■ A/B Series Size

You can select a size from A and B series sizes such as A4 and B5.

■ Inch Size

You can select a size from Inch series sizes such as 8.5 x 11" and 11 x 17".

■ Others

You can select a size from other sizes than the above series such as photo and postcard sizes.

■ Custom Size

You can enter any size. Set the width (X) from 15 to 432 mm, and the height (Y) from 15 to 297 mm in 1 mm increments.

Output Size Defaults

Set the sizes to display in [Output Size] when selecting [Enter Output Size] for scanning documents at [Reduce/Enlarge] in the [Layout Adjustment] screen.

You can assign any output size to output size buttons.

Assigning the output sizes to the buttons will save your time to specify the size each time.

■ **A/B Series Size**

You can select a size from A and B series sizes such as A4 and B5.

■ **Inch Size**

You can select a size from Inch series sizes such as 8.5 x 11" and 11 x 17".

■ **Others**

You can select a size from other sizes than the above series such as photo and postcard sizes.

Reduce/Enlarge Presets

Set the magnifications displayed as [Preset %] which are displayed when [Proportional %] is selected under [Reduce/Enlarge] in the [Layout Adjustment] screen.

You can assign any magnification to the Reduce/Enlarge Preset buttons other than[100 %].

■ **Preset %**

Select a ratio from standard magnification ratios.

■ **Variable %**

You can specify a magnification from 25 to 400 % in 1 % increments.

Other Settings

You can configure other settings related to the Scan services specifications.

Memory Full Procedure

If there is insufficient hard disk memory while scanning a document, a screen appears asking you how you want to handle the partially stored data.

Set the process you want the machine to perform for the partially stored data after a certain time has elapsed in the confirmation screen.

Reference

- You can set the time until the memory full procedure is carried out. For more information, refer to "Auto Job Release" (P.148).

■ **Delete Job**

Deletes the data partially stored.

■ **Run Job**

Treats the read-in data as valid, and starts sending the document partially stored.

Maximum Stored Pages

Set the maximum number of pages stored for a scan document. You can specify from 1 to 999 pages.

Saturation

Set the saturation when scanning a full color document. When a document is scanned, saturation is automatically adjusted according to the value set here.

Background Suppression Level

Set the background suppression level. This is valid when [Background Suppression] is set to [Auto Suppression].

The larger the value is, the stronger the effect of suppressing the background becomes.

Shadow Suppression Level

Set the shadow suppression level. This is valid when [Shadow Suppression] is set to [Auto Suppression].

Color Space

Set whether or not to display the Color Space feature.

When you select [Enabled], the [Color Space] button is displayed on the [Advanced Settings] screen for the [E-mail], [Store to Folder], [Scan to PC], and [Job Template].

TIFF Format

Set the TIFF format for scanned data. You can select either [TIFF V6] or [TTN2].

Image Transfer Screen

Select whether or not to display a message when the scan of a document completes.

■ Disabled

Does not display a scan completion message.

■ Display Message at End of Scanning

Displays a scan completion message.

■ Display Scan & Transfer Screens

Displays the transfer screen after scan completion. The scan completion message is not displayed.

■ Display Message at End of Transfer

Displays a transfer completion message.

Filename Format

For the Store to Folder, Store to USB, Scan to PC, and Store & Send Link services, you can select the file name format.

You can select [DDMMYYYYHHMMSS] or [img-MDDHHMMSS].

Note

- When you select [DDMMYYYYHHMMSS], the order depends on the setting of [Date Format] in [System Settings] > [Machine Clock/Timers] > [Date].
- When you select [img-MDDHHMMSS], October, November, and December are represented by X, Y, and Z respectively.

Add Date to E-mail Attachment Name

Set whether or not to add dates and page number after file names when E-mail is selected.

The file name depends on the setting of [Filename Format] and whether or not the file name is automatically generated.

The followings are examples of the file names:

Enabled

1) When a file name is automatically generated:

20121002023309-0001.tif or img-X02023309-0001.tif

2) When a file name is specified:

Report-20121002023309-0001.tif or Report-X02023309-0001.tif

Disabled

1) When a file name is automatically generated: 20121002023309-0001.tif or img.tif

2) When a file name is specified: Report.tif

Note

- This setting is also applied to the file names of the Internet Fax service.
- When you select [DDMMYYYYHHMMSS] for [Filename Format], even if you select [Disabled], the date is added to the file names.

Searchable - Page Orientation

Set whether or not to handle the character orientation to be upright when the machine scans a document with OCR (Optical Character Recognition).

Note

- This feature does not appear for some models. An optional component is required. For more information, contact our Customer Support Center.

■ Auto Upright Orientation

Handles the character orientation upright regardless of the document orientation.

■ According to Original Orientation

Handles the character orientation depending on the document orientation.

URL File Expiration

Set the retention period for files stored with the Store & Send Link feature. You can specify a value from 1 to 168 hours in 1 hour increments. The default value is 3 hours.

Note

- This feature may not be available depending on the model or your machine configuration. For information, contact out Customer Support Center.

Generation of URL Link

Set the format of URLs generated with the Store & Send Link feature. Select either [Use IP Address] or [Use FQDN].

The following are examples of URLs:

If [Use IP Address] is selected:

http://192.0.2.1/scanUrl/doc1/get.htm

If [Use FQDN] is selected:

http://pc1.mycompany.co.jp/scanUrl/doc1/get.htm

Note

- This feature may not be available depending on the model or your machine configuration. For information, contact out Customer Support Center.

Store & Send Link - Maximum File Size

Set the maximum data size of files that can be stored for the Store & Send Link feature. You can specify the value from 1 to 200 MB in 1 MB increments. The default value is 200 MB.

Note

- This feature may not be available depending on the model or your machine configuration. For information, contact out Customer Support Center.

Print Login Name on PDF Files

If scanning a document in PDF format when local machine authentication is enabled, you can set whether or not to add an authentication user name as the Author in the document properties of the PDF document.

Fax Service Settings

In [Fax Service Settings], you can configure settings related to the Fax service.

Note

- This feature does not appear for some models. The items displayed on the screen vary depending on the optional components installed. For more information, contact our Customer Support Center.
- You can register new address book entries in [Add Address Book Entry] under [Setup]. For more information, refer to "Add Address Book Entry" (P.289).

The following shows the reference section for each setting.

"Screen Defaults" (P.245)

"Fax Defaults" (P.246)

"Fax Control" (P.248)

"Fax Received Options" (P.255)

"Reduce/Enlarge Presets" (P.257)

"Original Size Defaults" (P.257)

"Local Terminal Information" (P.258)

"Internet Fax Control" (P.259)

1. On the [Tools] screen, select [Fax Service Settings].

   Reference

   - For the method of displaying the [Tools] screen, refer to "System Settings Procedure" (P.138).

2. Select an item to set or change.

Screen Defaults

You can set items displayed on the [Fax/Internet Fax] screen.

Fax Screen Default

Set the default screen that appears when the [Fax/Internet Fax] screen is selected in the Services Home screen.

Select from [Fax Tab] or [Address Book].

1st Tab - Features Allocation

Set the features that appear on the [Fax/Internet Fax] screen.

■ Feature in 2nd to 4th Column

You can set the features that appear in the second to the fourth column of the lower part on the [Fax/Internet Fax] screen.

Select the item to be displayed from [Not Selected], [2 Sided Faxing], [Original Type], [Resolution], [Confirmation Options], [Starting Rate], [Transmission Header], [Mixed Size Originals], and [Reduce / Enlarge].

[2 Sided Faxing] and [Mixed Size Originals] are not displayed on the screen for the models without the document feeder.

Reduce / Enlarge - Button 3 - 5

This item can be set when [Reduce/Enlarge] is selected in [Feature in 2nd to 4th Column].

You can set the magnifications displayed as [Preset %] which are displayed under [Reduce/Enlarge] in the [Layout Adjustment] screen. You can assign any magnification to the Reduce/Enlarge - Button 3 - 5.

Transmission Screen

Set whether or not to display transmission status during transmission.

Display Fax Line Selection

Set whether or not to enable you to select a fax line (port) on the [Fax / Internet Fax] screen.

Note

- This feature may not be available depending on the model or your machine configuration. For information, contact out Customer Support Center.

■ Display Fax Line Selection

Specify whether or not to displaythe [Line Selection] option on the [Fax / Internet Fax] screen.

■ Fax Line 1 - Name to Fax Line 3 - Name

Specify the names for each fax line.

Note

- The number of lines displayed on the screen depends on the options installed on the machine.

Fax Defaults

You can set the default settings of the Fax services. When the machine is turned on, or the machine exits from the Power Saver mode, or when the <Clear All> button is pressed, the machine resets to the default values specified under this menu. By setting frequently used features and values as the defaults, you can simplify operations.

Reference

- For more information on each setting item, refer to "Fax" in the User Guide.

Resolution

Set the default value for [Resolution] in the [Fax/Internet Fax] and [Layout Adjustment] screens.

Original Type

Set the default value for [Original Type] in the [Fax/Internet Fax] and [Layout Adjustment] screens.

Lighten/Darken

Set the default value for [Lighten/Darken] in the [Fax/Internet Fax] and [Layout Adjustment] screens.

Mixed Size Originals

Set the default value for [Mixed Size Originals] in the [Layout Adjustment] screen.

Note

- This feature does not appear for some models. An optional component is required. For more information, contact our Customer Support Center.

Preview

Set whether or not to place a check mark in the [Preview] checkbox of the First Tab by default.

Stamp

Set the default value for [Stamp] in the [Layout Adjustment] screen.

Note

- This feature does not appear for some models. An optional component is required. For more information, contact our Customer Support Center.

Skip Blank Pages

Set the default value for [2 Sided Scanning] in the [Fax/Internet Fax] and [Layout Adjustment] screens to [2 Sided (First Page 1 Sided)].

Note

- This feature is for service representative use. For more information, contact our Customer Support Center.

Starting Rate

Set the default value for [Starting Rate] in the [Fax/Internet Fax Options] screen.

Delay Start - Specific Time

Set the default value for [Specific Time] of [Priority Send/Delay Start] in the [Fax/Internet Fax Options] screen when [Specific Time] is selected for [Delay Start].

Transmission Header Text

Set the default value for [Transmission Header Text] in the [Fax/Internet Fax Options] screen.

Confirmation Options

Set the default value for [Confirmation Options] of [Acknowledgement Report] in the [Fax/Internet Fax Options] screen.

Note

- You can select Delivery Receipts or Read Receipts in [Delivery Confirmation Method]. For more information on the delivery confirmation method, refer to "Delivery Confirmation Method" (P.260).

Delivery Receipts/Read Receipts

Set the default value for [Read Receipts] or [Delivery Receipt] of [Acknowledgement Report] in the [Fax/Internet Fax Options] screen.

Note

- You can select Delivery Receipts or Read Receipts in [Delivery Confirmation Method]. For more information on the delivery confirmation method, refer to "Delivery Confirmation Method" (P.260).

Internet Fax Profile

Set the default value for [Internet Fax Profile] in the [Fax/Internet Fax Options] screen.

Internet Fax Subject

Set the default value for [Internet Fax Subject] in the [Fax/Internet Fax Options] screen. Up to 128 single-byte characters can be entered for the subject.

Internet Fax Encryption

Set the default value for [Encryption] in the [Fax/Internet Fax Options] screen.

Note

- This feature appears only when the root certificate for a remote server for remote authentication (except for ApeosWare Authentication Management or Authentication Agent) is set.

Fax Control

You can configure the settings related to fax control.

Extension

To set which port to use when you send a fax to an extension.

Note

- This feature may not be available depending on the model or your machine configuration. For more information, contact our Customer Support Center.

Re-enter Recipients

Set whether to re-enter the recipient after once specifying the recipient, to reduce the risk of sending a fax, an IP fax, or an Internet fax to the wrong address. When Re-enter Recipients is set to [Enter Twice], if you specify the recipient by entering the phone number, or by selecting from the Address Book, the screen prompting you to re-enter the recipient appears. If the same recipient has been entered, the transmission process will start.

Re-enter Broadcast Recipients

This setting is required when you selected [Enter Twice] for [Re-enter Recipients]. Set whether or not to allow the Broadcast Send.

■ Enter Once Only

Allows the Broadcast Send. No need to re-enter the recipient.

■ Enter Twice

Allows the Broadcast Send. Re-entering the recipient is required.

■ Broadcast Disabled

No Broadcast Send is allowed.

Re-enter Speed Dial Recipients

This setting is required when you selected [Enter Twice] for [Re-enter Recipients]. Select how to re-enter a recipient after the first entry.

■ **Enter Once Only**

No need to re-enter the recipient.

■ **Enter Twice**

Use the Speed Dial feature to re-enter the recipient.

■ **Re-enter Fax Number or E-mail**

You cannot enter the speed dial when you re-enter the number or address. Use the fax number, SIP User ID (Sign-in Name), phone number or SIP user name for IP fax, or e-mail address to enter the recipient.

Re-enter Group Recipients

Specifies whether you need to re-enter group addresses after entering a group address.

■ **Group Send Disabled**

No group recipient is allowed.

■ **Enter Once Only**

No need to re-enter the group recipient.

■ **Enter Twice**

Re-entering the group recipient is required.

Broadcast Checkbox on 1st Tab

Specify whether or not to show the [Enable Broadcast] checkbox in the [Fax/Internet Fax] screen to explicitly express broadcast directions.

Chain Dial

Allows you to combine the fax numbers registered in one touch button, speed dial, and address book respectively and the numbers entered using the numeric keypad to specify as one recipient. You can select from [No] or [Yes].

Note

- This item is valid when [Address Book Type] under [Tools] > [System Settings] > [Address Book Settings] is set to [Type 1].

Manual Redial List - Saved Entries

Specify the number of redial destinations saved.

Manual Redial List - Dial Mode

Specify the destination type saved as a redial destination number.

When you deselect all the check boxes, the Redial feature becomes disabled.

Transmission Header Text - Polling

Set whether or not to attach a transmission header to a polling file.

A polling is the function that a document is stored in the machine's public folder for polling, and can then be sent by an operation from the other party.

Polled Files - Auto Delete

Set whether or not to automatically delete a polling file after transmission.

Rotate 90 degrees

Set whether or not to automatically rotate a document if its image must be reduced in size unless it is rotated.

Note

- If an arbitrary magnification is specified in [Reduce/Enlarge], the Rotate 90 Degrees feature does not function.

G3 Sender ID - Fax

When using G3 communications, you can select whether to notify G3 ID to recipients for fax.

G3 Sender ID - IP Fax (SIP)

When using G3 communications, you can select whether to notify G3 ID to recipients for IP Fax (SIP).

Save Undelivered Faxes

Set whether or not to save a fax document if a fax transmission fails. When [Yes] is selected, the [Undelivered Faxes] button appears on the [Secure Print Jobs & More] tab of the [Job Status] screen. Select this button to send the fax document again.

Reference

- For details on Undelivered Faxes, refer to "Job Status" > "Printing and Deleting Stored Jobs" > "Undelivered Faxes" in the User Guide.

Save Deleted Faxes

When [Yes] is selected for [Save Undelivered Faxes], set whether or not to save cancelled faxes.

Saved Faxes - Auto Delete

When [Yes] is selected for [Save Undelivered Faxes], set whether or not to automatically delete saved faxes in 24 hours.

Transmission Interval

Specify a value for the interval between the end of one transmission and the beginning of the next, from 3 to 255 seconds in 1 second increments.

A longer transmission interval increases the total time to send a broadcast transmission, but allows calls to be received during the standby time.

Batch Send

When the machine stores multiple faxes addressed to a destination, enabling the Batch Send feature allows you to send them all at the same time in a single fax transmission. By using this feature, you can reduce your communication costs. Select whether or not to enable the Batch Send feature.

Note that a batch send is not available for manual transmissions, broadcasts, relay broadcasts, remote folder, and delayed start transmission with a specified time before the

specified time. When a redial, resend, delayed start transmission job, or the Authentication feature is used and different users send to the same address, a batch send is not possible.

Manual Send/Receive Default

When on-hook or off-hook is used when sending a fax, select either [Manual Receive] or [Manual Send].

Note

- This setting is not valid for IP fax (SIP) because the IP Fax feature does not offer the Manual Send/Receive feature option.

Fax Receiving Mode

Set the default value for [Fax Receiving Mode] in the [Machine Information] screen displayed by pressing the <Machine Status> button. Select whether or not to receive a fax automatically or manually.

Note

- As for IP fax (SIP), the machine always receives faxes automatically.

Border Limit

Set the length to make a page break that will be applied when the length of a received fax document is longer than the paper length. You can specify a value from 0 to 127 mm in 1 mm increments.

This setting can conveniently be used together with the following Auto Reduce on Receipt feature.

Auto Reduce On Receipt

When the length of a received fax document exceeds the paper length but is within the page break threshold value, select whether or not to automatically reduce the image to fit the page.

This setting can conveniently be used together with the Border Limit feature. If you select [No], the part of the image beyond the paper length is ignored.

Receiving Paper Size

Set the method of notifying the paper size on which the received fax document will be printed, from the receiver to the sender.

■ Tray Mode

Specify the paper tray for printing the received fax document. Only the specified paper tray will be used for printing the received document. Multiple paper trays can be specified except for Tray 5. If the fax document cannot be printed on the paper loaded in the specified paper trays, the machine displays a message stating that it will be printed on the paper loaded in Tray 5. Load paper in Tray 5 and press the <Start> button to print the document. To cancel printing, press the <Clear All> button.

■ User Mode

Specify the paper sizes to use for printing received fax documents. Regardless of whether the paper is loaded in the trays, only the specified size paper is used for printing. When youselect [User Mode], select paper sizes from [A3], [A4], [A4], [A5], [B4], [B5], [8.5X11"], and [Select All]. You can select one or more paper sizes.

2 Pages Up On Receipt

Set whether or not to print two pages of a fax document on one side of a sheet. This is convenient for saving paper.

For example, when two A5 pages are received, they are printed on a single A4 sheet. However, if paper of the same paper size as the received document is specified in [Receiving Paper Size], it is printed on the specified size of paper. Depending on the sizes of the received document, two pages of the document may not be printed on one sheet of paper.

2 Sided Printing

Set whether or not to print received fax documents (including the Internet fax received documents) as 2 sided. This is convenient for saving paper.

Note

- Even if you select [On], depending on the data, 2 sided printing may not always be possible.

Edge Erase - Top & Bottom Edges

Specify the amount of edges erased from the document in the top and bottom directions. Specify a value from 0 to 20 mm in 1 mm increments.

Edge Erase - Left & Right Edges

Specify the amount of edges erased from the document in the left and right directions. Specify a value from 0 to 20 mm in 1 mm increments.

Reduce 8.5 x 11"Original to A4

When [Reduce/Enlarge] in the [Layout Adjustment] screen is set to [Auto %], you can set whether or not to reduce 8.5 x 11”size document to A4, while scanning the document.

Pseudo-Photo Gradation Mode

You can select a gradation expression mode. Selecting this mode enables the machine to change the processing method for gray part (halftone) to achieve near-photo quality. Select either [Error Diffusion] or [Dither].

Changing this setting also changes the photo gradation mode for Color Scanning (Black & White).

Folder Selector by G3 ID

Set whether or not to use the Folder Selector by G3 ID feature.

The Folder Selector by G3 ID feature allows you to classify received documents according to sender's G3ID and store them to specified.

Note

- When the machine does not send sender's G3 ID to a recipient, the recipient may not send recipient's G3 ID. In this case, the received documents cannot be classified according to G3 ID.
- Due to that G3 ID is manually registered by a sender, the telephone number set for G3 ID may be wrong. You can find G3 ID sent by the sender in a Job History Report.
- You can find the G3 ID of the sender in "Input Source" column of a Job History Report.

Folder Selector by Telephone Number / G3 ID

Set whether or not to use the Folder Selector by Telephone Number / G3 ID feature.

This feature allows you to classify received documents according to sender's telephone number (Caller ID), G3 ID, or recipient's telephone number (Dial-In) and store them to specified folders.

Note

- This screen is displayed as [Folder Selector by G3 ID] when the IP Fax (SIP) Kit is not installed on the machine. In this case, classifying only by G3 ID is available.
- When the machine does not send sender's G3 ID to a recipient, the recipient may not send recipient's G3 ID. In this case, the received documents cannot be classified according to G3 ID.
- Due to that G3 ID is manually registered by a sender, the telephone number set for G3 ID may be wrong. You can find G3 ID sent by the sender in a Job History Report.
- You can find the G3 ID of the sender in "Input Source" column of a Job History Report.

Folder Selector - Service Priority

When using the Folder Selector by Telephone Number / G3 ID feature, specify the priority for the methods of classifying received documents: by sender's telephone number (Caller ID), G3 ID, or recipient's number (Dial-in). Select priority from [First Priority], [Second Priority], or [Third Priority] for each method.

This feature is available only when the IP Fax (SIP) kit is installed on the machine.

Folder Selector Setup

Select whether or not to use the Folder Selector Setup feature.

The Folder Selector Setup feature allows you to classify received faxes by line type and store them in folders specified.

Filename Format for Store to Folder

Set the format for the filename to be generated when fax is stored to folder.

When [YYYYMMDDHHMMSS] is selected, the files will be named in the order of year, month, day, hour, minute, and second. When [img-MDDHHMMSS] is selected, the files will be named in the order of month, day, hour, minute, and second after a fixed string "img-".

Note

- When you select [YYYYMMDDHHMMSS], the order depends on the setting of [Date Format] in [System Settings] > [Common Service Settings] > [Machine Clock / Timers] > [Date].
- When you select [img-MDDHHMMSS], October, November, and December are represented by X, Y, and Z respectively.

Memory Full Procedure

If there is insufficient hard disk memory while scanning a document, a screen appears asking you how you want to handle the partially stored data.

Set the process you want the machine to perform for the partially stored data after a certain time has elapsed in the confirmation screen.

Reference

- You can set the time until the memory full procedure is carried out. For more information, refer to "Auto Job Release" (P.148).

■ Delete Job

Deletes the data partially stored.

■ **Run Job**

Treats the read-in data as valid, and start scanning the document partially stored.

Maximum Stored Pages

Set the maximum number of pages stored for a fax document. You can specify from 1 to 999 pages.

Mixed Size Originals Scan Mode

Set the scan mode when the machine scans documents of various sizes simultaneously with the document feeder. If only documents of standard sizes are to be scanned, we recommend that you select [Standard Size Mode].

Important

- When [Standard Size Mode] is selected, image loss may occur if the following types of documents are scanned:
  - Non-standard size documents
  - B4 size documents with the inch series setting in [Paper Size Settings].

Skip Blank Pages

Set whether or not to detect blank pages while scanning 2 sided documents and transmits only pages that are not blank.

Note

- This feature is for service representative use. For more information, contact our Customer Support Center.

Fax Data in Folder Priority 1 to 3

Set the priority to display the fax information received using folders. For instance, when using Network Scanner Utility 3, the fax information is displayed in the [Recipient] section of the file list screen.

There are priority levels from 1 to 3. All priority can be set, however, if you want to display only one priority level, make the settings of all priority levels the same.

Direct Fax

Set whether or not to receive a fax, which is instructed using a fax driver from a computer. When you select [Disabled], the Direct Fax feature becomes unavailable.

Block Inbound Faxes

Set a G3 ID (fax number) from which you want to reject a fax reception. You can specify up to 50 G3 IDs.

Note

- You can find the G3 ID of the sender that you want to reject in "Remote Station" column of an Activity Report or "Input Source" column of a Job History Report.

Block Unknown Fax Numbers

Set whether or not to receive faxes from unknown G3 ID fax numbers. When [Yes] is selected, the machine does not receive faxes from unknown fax numbers.

Fax Received Options

Fax Received Options allows you to specify a method for classifying received fax documents into specified folders.

There are following two methods for classifying received documents.

- Folder Selector by Telephone Number / G3 ID
- Folder Selector Setup

Note

- When you enable both features, classifying by [Folder Selector by Telephone Number / G3 ID] takes precedence.

Folder Selector by Telephone Number / G3 ID

The machine classifies the received documents by sender's telephone number (Caller ID), G3 ID , or recipient's telephone number (Dial-In) and stores them in specified folders. You can register up to 500 settings.

Note

- This screen is displayed as [Folder Selector by G3 ID] when the IP Fax (SIP) Kit is not installed on the machine. In this case, classifying only by G3 ID is available.

Folder Selector by Telephone Number / G3 ID

Set whether or not to use the Folder Selector by Telephone Number / G3 ID feature.

This feature allows you to classify received documents according to sender's telephone number (Caller ID), G3 ID, or recipient's telephone number (Dial-In) and store them to specified folders.

Note

- This screen is displayed as [Folder Selector by G3 ID] when the IP Fax (SIP) Kit is not installed on the machine. In this case, classifying only by G3 ID is available.

1. Select [Folder Selector by Telephone Number / G3 ID].

2. Select a folder selector number to register and then select [Create/Delete].

Note

- Select [▲] to display the previous screen or [▼] to display the next screen.
- Entering a 3-digit folder selector number with the numeric keypad displays the specified folder selector at the top of the column.

3. Select a setting item and then select [Change Settings].

■Service

Specify the priority of classifying method when [Dial-In], [Caller ID], and [G3ID] are informed at the same time. [Dial-In] is set as the factory default value.

■Telephone Number / G3 ID

Enter a G3 ID telephone number to be classified up to 20 digits with the numeric keypad.When you use * (wild card), the machine checks the G3 ID telephone number from the first digit. For example, when you enter "03*", the documents sent from the G3 IDs telephone number beginning with "03" are stored to the specified folder.When you do not use * (wild card), the machine checks the G3 ID telephone number from the last digit. For

example, when you enter "1234", the documents sent from the G3 IDs telephone number of which last four digits are "1234" are stored to the specified folder.

Important

- * (wild card) cannot be entered as the first digit.

Note

- The machine checks the folder selector in ascending order. So we recommend you to register specific telephone number on smaller folder selector numbers to have intended result of the classifying.

■Folder Number

Enter a 3 digits folder number with the numeric keypad. The documents are stored to the specified folder.

4 Edit settings and select [Save].

5 Repeat step 3 to 4 as necessary.

6 Select [Save].

Folder Selector Setup

If you set the classification by line type, the machine classifies the received documents by line type and store them in the folders specified.

Note

- You can assign folders specified to each line to the service buttons on the Services Home screen. The number of documents in the folder is displayed on the assigned service button. Pressing the button allows you to confirm the documents in the folder. For more information, refer to "Customizing the Button Layout" (P.33).

1 Select [Folder Selector Setup].

2 Select the line to register, and then select [Change Settings].

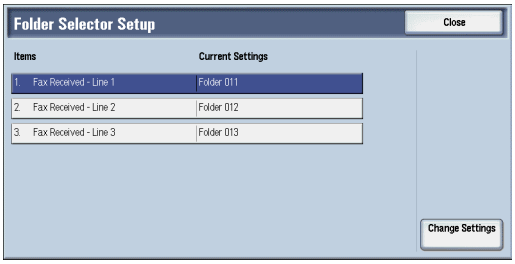

Note

- The displayed items may vary depending on the options installed.

3 Select [On].

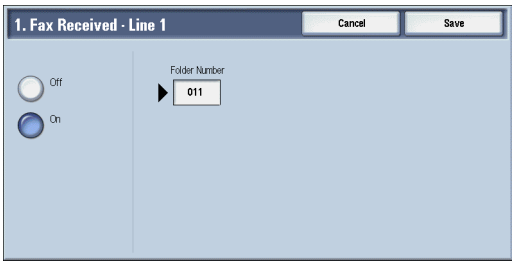

4 Enter the folder number (three digits) where you want to store the faxes with the numeric keypad.

5 Select [Save].

Output Destination Setup

In [Output Destination Setup], you can set the output destination for each receiving line.

Note

- This feature may not be available depending on the model or your machine configuration. For more information, contact our Customer Support Center.
- The displayed items may vary depending on the options installed.

■ Fax Received - Line 1 to 3

Specify output tray for each line.

■ Fax Received - SIP

Specify output tray for IP fax (SIP).

■ Public Folder Printed Files

Specifies output tray for public folder for polling.

Reduce/Enlarge Presets

You can set the magnifications displayed as [Preset %] which are displayed under [Reduce/Enlarge] in the [Layout Adjustment] screen. You can assign any magnification to the Reduce/Enlarge Preset buttons other than [100 %] and [Auto %].

■ Preset %

You can select a ratio from preset ratios.

■ Variable %

You can specify a magnification from 50 to 400 % in 1 % increments.

Original Size Defaults

You can set the original sizes displayed in [Original Size] in the [Layout Adjustment] screen.

You can assign original sizes to the buttons other than [Auto Detect].

If you frequently use non-standard size paper for scanning, setting non-standard size as the default will save your time to specify the size each time.

■ A/B Series Size

You can select a size from A and B series sizes such as A4 and B5.

■ Inch Size

You can select a size from Inch series sizes such as 8.5 x 11" and 11 x 17".

■ Others

You can select a size from other sizes such as photo and postcard.

Local Terminal Information

You can set the local terminal information, including a local name and company logo.

Note

- The displayed items may vary depending on the options installed.
- There are a maximum of three lines that can be used for G3 communications: line 1, line 2, and line 3.
- You can set a company logo, G3 ID (fax number), G3 dial type, and G3 line type.

Reference

- For information about how to enter characters, refer to "Entering Text" (P.45).

Local Name

Register the name of the local terminal as the local name.

The local name is shown in the recipient's touch screen or Activity Report. Depending on the recipient's device, however, it may not be displayed.

Specify a local name with up to 20 single-byte characters using the keyboard displayed or the numeric keypad.

Company Logo

Register the sender name (company logo). The company logo is printed in the Transmission Header Text or Cover Page. Specify a company logo with up to 60 single-byte characters using the keyboard displayed or the numeric keypad.

Note

- If [Line 1 to 3 - Company Logo] or [Company Logo for SIP Line] is not registered, the company logo is used.

Machine Password

Set the machine password when you want to limit the other parties that can send faxes.

When the machine password is set, only a party that sends the correct machine password by F code is allowed to send or poll. Note that this means that faxes cannot be accepted from a fax without the F Code feature.

Line 1 to 3 - Company Logo

Register the sender names for lines 1 to 3. The sender name is printed in the Transmission Header Text or Cover Page. Enter up to 60 single-byte characters using the keyboard displayed or the numeric keypad.

G3 Line 1 to 3 - Fax ID

When using G3 communications, register the G3 ID. The G3 ID is normally set to the local terminal fax number.

Specify a G3 ID with up to 20 digits using the keyboard displayed or the numeric keypad.

Note

- A G3 ID (fax number) can consist of not more than 20 digits, including 0 to 9, +, and space.

G3 Line 1 to 3 - Dial Type

Set the dial type.

■ Tone

Tone dialing line.

■ **10pps**

Pulse dialing line.

G3 Line 1 to 3 - Line Type

Set the line type.

■ **PBX**

Private branch exchange.

SIP Line - Company Logo

Register the sender names for IP fax (SIP). The sender name is printed in the Transmission Header Text or Cover Page. Enter up to 60 characters using the keyboard displayed or the numeric keypad.

G3 SIP Line - ID

When using G3 communications, register the G3 ID for IP fax (SIP).

Specify a G3 ID with up to 20 digits using the keyboard displayed or the numeric keypad.

Internet Fax Control

You can configure the settings related to the Internet fax control.

Internet Fax Path

Set the Internet fax communication path.

■ **Via E-mail Server**

Sends e-mail via an SMTP server.

■ **Direct (P2P)**

Directly sends to the machine with the Internet Fax feature, without going through an SMTP server.

You can specify the following two types of e-mail address for the Internet Fax feature:

- Specifying a host name @ must be followed by FQDN. Example: local-part@device.domain.jp
- Specifying an IP address @ must be followed by an IP address with brackets. Example: local-part@[192.0.2.1]

Profile for Broadcast Job

Set the default value for an Internet fax profile when performing an Internet fax broadcast send.

A profile is specified to restrict attribute information such as image resolution and paper size for transmissions between Internet Fax-enabled machines.

Important

- The supported TIFF-file profiles vary depending on the destination Internet Fax-enabled machine. Before specifying a profile, check the profile that the destination machine supports.

■ TIFF-S

The Internet fax standard profile. For documents larger than A4, the size is automatically reduced to A4 when transmission.

■ TIFF-F

Select this profile when you specify [Superfine] for [Resolution] or when you send A3 or B4 documents.

■ TIFF-J

Select this profile for sending documents in JBIG.

Broadcast Starting Rate

Set the default value for the communications mode for the broadcasting for the Internet fax.

Delivery Confirmation Method

Set the default value for the method of confirming that an Internet fax sent has arrived or not.

To print a transmission result, set [Print Delivery Confirmation Mail] to [On] under [E-mail/ Internet Fax Service Settings] > [E-mail Control].

Note

- You can select [Delivery Receipts] when the destination machine supports the DSN feature. You can use [Read Receipts] when the destination machine supports the MDN feature.

■ Delivery Receipts

You can confirm whether the Internet fax you sent is delivered to the recipient's folder successfully.

■ Read Receipts

You can confirm whether the Internet fax including attachments you sent is processed properly at the recipient.

Incoming Internet Fax Print Options

When an e-mail sent from an Internet fax compatible machine to the e-mail address of the machine is received, you can select the print operation.

■ Print Attachment Only

Only prints the attached documents.

■ Attachment, Full Headers & Message

Prints the e-mail header and body of e-mails.

■ Attachment, Basic Headers & Message

Prints the part of headers (From/To/Subject/Date) and the contents of e-mails. When you select [Do not print if no message], the machine prints only e-mail that has contents.

Internet Fax Output Destination

Set the output tray to use for printed Internet fax documents.

Note

- This feature does not appear for some models. An optional component is required. For more information, contact our Customer Support Center.

Fax Transfer from Address Book

Set whether to permit forwarding of Internet fax data received by e-mail via SMTP when the forwarding destination is not registered on the Address Book.

■ Off

Permits forwarding.

■ On

Checks whether the forwarding fax number is listed in the Address Book, and if not, rejects receiving the e-mail and deletes it.

Transmission Header Text - Fax Transfer

When forwarding received e-mail from Internet fax to fax, select whether or not to add a Transmission Header Text (start time, company logo, recipient name, G3 ID, and number of pages).

Fax Transfer Maximum Data Size

When forwarding a received e-mail from Internet fax to fax, set the maximum data size.

■ No Limit

No limit on data size.

■ Limit Size

Specify a value from 1 to 65535 KB in 1 KB increments. If a data size exceeds the specified value, the data is deleted.

E-mail/Internet Fax Service Settings

In [E-mail/Internet Fax Service Settings], you can configure settings related to the e-mail and the Internet Fax service.

Note

- This feature does not appear for some models. An optional component is required. For more information, contact our Customer Support Center.

1. On the [Tools] screen, select [System Settings] > [E-mail/Internet Fax Service Settings].

Reference

- For the method of displaying the [Tools] screen, refer to "System Settings Procedure" (P.138).

2. Select an item to set or change.

E-mail Control

You can configure the settings for e-mail and Internet fax transmissions.

Maximum Address Entries

Set the maximum number of addresses that can be specified when sending an e-mail.

The number of addresses is the total number of To:/Cc:/Bcc:.

You can set the maximum number of addresses from 1 to 100. If the maximum number of addresses exceeds, the e-mail transmission is aborted.

Important

- This option is not applicable to the Internet Fax service.

Incoming E-mail Print Options

When an e-mail sent to the e-mail address of the machine is received, you can select the print operation.

■ Print Attachment Only

Only prints the attached documents.

■ Attachment, Full Headers & Message

Prints the e-mail headers and body of e-mails.

When you select [Attachment, Full Headers & Message (with S/MIME Info)], S/MIME Information is also printed.

■ Attachment, Basic Headers & Message

Prints the part of headers (From/To/Subject/Date) and the contents of e-mails.

When you select [Do not print if no message], the machine prints only e-mail that has contents.

Print Error Notification E-mail

Select whether the error e-mail because of an incorrect address or transmission error should be automatically printed.

Note

- The job for printing error e-mail is displayed as an error on the [Job Status] screen and a Job History Report even when the job has been complete successfully.

Response to Read Receipts

Set whether or not to respond when a read receipt (MDN) is requested.

■ Off

Does not respond.

■ On

Automatically notifies the sender that the e-mail has been processed.

Read Receipts

When an e-mail is sent from the machine, select whether or not to use the Read Receipts feature.

■ Off

The Read Receipts feature is disabled.

■ On

Uses the Read Receipts feature.

Important

- For the Internet fax read receipts setting, select either [Delivery Receipts] or [Read Receipts] in [Delivery Confirmation Method] under [Tools] > [System Settings] > [Fax Service Settings] > [Internet Fax Control].

Print Delivery Confirmation Mail

Select whether or not to automatically print transmission result e-mails (DSN response/ MDN response).

■ Off

Does not print transmission result e-mails.

■ On

Transmission result e-mails are automatically printed regardless of success or failure of the transmission.

■ Print when delivery fails

Prints only when the transmission failed.

Split Send Method

Set the default value for the mail split method.

■ Split into Pages

Splits into pages.

■ **Split by Data Size**

Splits by the data size set in [Maximum Data Size per E-mail].

Maximum Data Size per E-mail

Set the upper limit of the data size for splitting mail.

Specify a value from 512 to 20480 KB in 1 KB increments. The default value is 10240 KB.

Maximum Total Data Size

Set the upper limit of the data size of mail.

Specify a value from 512 to 200000 KB in 1 KB increments. The default value is 200000 KB.

Maximum Split Count

Set the split upper limit for splitting mail.

Specify not to split mail or a value from 2 to 500.

Allow Casual Users to Edit From Field

Set whether or not to protect e-mail addresses from being changed by unregistered users under [From] on the [E-mail] tab.

Allow Guest Users to Edit From Field

Set whether or not to protect e-mail addresses from being changed by guest users under [From] on the [E-mail] tab.

Allow to edit From if Search Found

Set whether or not to protect e-mail addresses from being changed under [From] on the [Email] tab when a login user retrieves an e-mail address.

Allow to edit From if Search Failed

Set whether to protect e-mail addresses from being changed under [From] on the [E-mail] tab when a login user fails to retrieve an e-mail address.

E-mail Sending When Search Failed

Set whether or not to disable the [E-mail] service when a login user fails to retrieve an e-mail address.

Add Me to "To" Field

Set whether or not to automatically add the sender's address to the To field.

Add Me to "Cc" Field

Set whether or not to automatically add the sender's address to the CC field.

Edit E-mail Recipients

Set whether or not to permit to edit e-mail recipients (To, CC, BCC). Selecting [No] prevents e-mails from being sent to unintended destinations.

Important

- If you set [Edit E-mail Recipients] to [No], set [Add Me to "To" Field] to [Yes].

Address Book Settings

In [Address Book Settings], you can configure settings related to the e-mail and the address book.

1 On the [Tools] screen, select [System Settings] > [Address Book Settings].

Reference

- For the method of displaying the [Tools] screen, refer to "System Settings Procedure" (P.138).

2 Select an item to set or change.

Address Book Type

Select the type of the Address Book from [Type 1] or [Type 2].

Directory Service

Select whether or not to use an address book stored on the directory server.

Even when [Enabled] is selected, the address book of the directory server will not be started unless the following conditions are satisfied.

- The IP address of the machine must be set.
- The IP address or Internet address of the directory server (primary) must be set.
- The port numbers used for LDAP communication must be set on the directory server and the machine.

Address Book Default - Scan

Select from [Public Entries] or [Network Entries].

Note

- This item can be set when [Directory Service] is set to [Enabled].

Address Book Default - Fax

Select from [Public Entries] or [Network Entries].

Note

- This item can be set when [Directory Service] is set to [Enabled].

Search Display Default

Select from [Simple Search] or [Advanced Search].

Note

- This item can be set when [Address Book Type] is set to [Type 1].

Fax Speed Dial Default

Specify the default speed dial to display at the top of the [Fax Address Book] screen.

Set the number from 1 to 2000.

Note

- Avalirable numbers to assign to speed dials are different depending on your machine configuration. For more information, contact our Customer Support Center.

Folder Service Settings

In [Folder Service Settings], you can configure settings to handle files stored in folders.

1 On the [Tools] screen, select [System Settings] > [Folder Service Settings].

Reference

- For the method of displaying the [Tools] screen, refer to "System Settings Procedure" (P.138).

2 Select an item to set or change.

Files Retrieved By Client

Set whether or not to delete a file stored in a folder when a client retrieves it.

■ Delete according to Folder settings

Operates following the settings for individual folder.

Reference

- For more information about setting folders, refer to "Delete Files After Retrieval" (P.278).

■ Force Delete

Ignores the settings for individual folder, and when a file is retrieved by a client, the retrieved file is forcibly deleted.

File Display Default

Set the display method of the file list screen. Select from [List] or [Thumbnail].

Orientation for Stored Print Jobs

Set the orientation of non-standard size documents to be stored in a folder. Select [Portrait] or [Landscape].Even when [Portrait] is selected, a print job whose orientation is not available for the paper tray will be stored in [Landscape] orientation.

Print & Delete Confirmation Screen

Set whether or not to display a confirmation screen for automatically deleting files after printing the files stored in a folder.

Convert Custom Size to Standard Size

Set whether or not to convert custom size to standard size when transferring a fax/Internet fax received or a file for Secure Polling in the folder.

Standard Size Threshold Value

Specify a threshold value for converting custom size to standard size when [Convert Custom Size to Standard Size] is set to [Yes (Fax & Internet Fax files only)].

Specify the value from 0 to 10 mm in 1 mm increments.

Internet Fax to Internet Fax

Select whether or not to permit Internet fax forwarding of files received in a folder.

Internet Fax to E-mail

Select whether or not to permit e-mail forwarding of files received in a folder.

Quality/File Size for Retrieval

Select a quality and size for files highly compressed and retrieved from folders. Select from [Quality: Normal, File Size: Small], [Quality: Higher, File Size: Larger], and [Quality: Maximum, File Size: Largest].

Job Flow Service Settings

In [Job Flow Service Settings], you can configure the settings related to the Job Flow. The Job Flow is a function to perform a series of jobs registered.

Also, in [Job Flow Service Settings], you can configure a pool server. As for [Pool Server], [Pool Server Login Method], and [Job Flow Sheet List Default], however, leave the default settings unchanged because a pool server is not available for the machine.

You can select a resolution in [Fax Transfer Resolution] when you transfer a scanned document as a fax.

Pool Server

Leave the default setting unchanged.

Pool Server Login Method

Leave the default setting unchanged.

Job Flow Sheet List Default

Set the default values for [Save in], [Owner], and [Target] of Job flow sheets which are displayed when you select [Job Flow Sheets] on the Services Home screen.

■ Save in

Leave the default setting unchanged.

■ Owner

Select the owner of job flow sheets from Administrator and Non-System Administrator to filter.

Note

- When the machine is in the Authentication mode, select the owner from Shared or Personal.

■ Target

Select the target of job flow sheets from Scan Jobs, External Application, and Copy to filter.

Fax Transfer Resolution

Select the resolution setting when you send a color document as a fax using the Job Flow feature.

■ Same Resolution (High Quality)

Converts color images to black and white images on a document with the same resolution when the document is transferred as a fax. Conversion of high resolution color images will take longer.

■ 200 dpi (High Speed)

Converts color images to black and white images of 200 dpi on a document when the document is transferred as a fax.

Reduces the time when converting color images of 300 dpi or higher to black and white images. 200 dpi is equivalent to [Fine] in fax transmission.

Media Print Service Settings

In [Media Print Service Settings], you can select the paper trays displayed for [Paper Supply] in the [Media Print Text] and [Media Print Photos] screens.

When the USB Memory Kit (optional) is installed in the machine, you can import and print image data (DCF1.0 (Exif 2.0 - 2.2 compliant JPEG/TIFF files)) from supported storage media and document files (PDF, TIFF, XPS (MSXPS format and OpenXPS format), XDW, XBD, or JPEG (JFIF)). This feature is called the Media Print feature.

Note

- This feature does not appear for some models. An optional component is required. For more information, contact our Customer Support Center.
- XPS stands for XML Paper Specification.

1. On the [Tools] screen, select [System Settings] > [Media Print Service Settings].

Reference

- For the method of displaying the [Tools] screen, refer to "System Settings Procedure" (P.138)

2. Select an item to set or change.

Text - Paper Supply - Button 2 to 5

Select the paper tray displayed in the second to fifth columns for [Paper Supply] on the [Media Print - Text] screen.

Photos - Paper Supply - Button 1 to 5

Select the paper tray displayed in the first to fifth columns for [Paper Supply] on the [Media Print - Photos] screen.

Stored File Settings

In [Stored File Settings], you can select whether to automatically delete files stored on the folder or the machine. Set the expiration date and the time of deletion.

You can also set whether or not to delete the stored file by file type.

1. On the [Tools] screen, select [System Settings] > [Stored File Settings].

Reference

- For the method of displaying the [Tools] screen, refer to "System Settings Procedure" (P.138).

2. Select an item to set or change.

Expiration Date for Files in Folder

You can set expiration date for the file in a folder. To delete stored files automatically, specify an expiration date and deletion time. The settings apply to all folders.

■ Off

Does not automatically delete the print files stored in the machine.

■ On

Allows you to set the file retention period and the expiration date. The stored files will be deleted after the time specified in [Files deleted at] passed.

■ Files kept for

Set the file retention period from 1 to 14 days.

■ Files deleted at

Set the deletion time for the expired files from 1 to 12 hours for AM or PM and 0 to 59 minutes.

Note

- When you select [24 Hour Clock] in [Common Service Settings] > [Machine Clock/Timers] > [Time], set the deletion time from 0 to 23 hours and 00 to 59 minutes.

Reference

- To automatically delete files at the time specified here, you need to set [Delete Expired Files] to [Yes]. For more information, refer to "Delete Expired Files" (P.278).

Stored Job Expiration Date

You can set whether or not to automatically delete print files (Charge Print, Private Charge Print, Secure Print, or Sample Print) stored in the machine.

■ Options

Set the retention period for stored jobs.

Select from [Off], [On], and [Same Date as Files in Folder]. When [On] is selected, set the value for [Files kept for] from 1 to 23 hours in 1 hour increments. If the time elapses, print files stored in the machine are deleted. When [Same Date as Files in Folder] is selected, print files stored in the machine are deleted in accordance with the setting in [Expiration Date for Files in Folder].

■ Power Off Deletes Jobs

Allows you to set whether or not to delete print files stored when the machine is turned off and then on. When you select [Yes], all stored print files are deleted. When you select [No], the machine deletes only the expired stored print files.

Important

- If you select [Yes], all print files stored will be deleted regardless of the setting in [Options].

Display Details of Stored Print Job List

Set whether or not to display detailed information such as output color and 2 sided in the stored job list of print files (Charge Print, Secure Print, Sample Print, or Delayed Print). When you select [On], detailed information is displayed in the list. When you select [Off], you can see more jobs at a time since detailed information is not displayed.

Preview Generation

Set whether or not to generate preview images when displaying the list of stored print files (Charge Print, Secure Print, Sample Print, or Delayed Print). Selecting [On] generates the preview images of stored print files when they are stored in the machine. Selecting [Off] generates no preview image and displays the list of stored print files. This setting can also be set from the printer driver. When the two settings between the driver and the machine are different, the setting of the printer driver will take precedence.

Note

- This feature may not be available depending on the model or your machine configuration. For information, contact out Customer Support Center.

Duration for Preview Generation

Set whether or not to restrict time to generate a preview image of the print files. When you select [No Limit], preview images are generated with no time restriction. When you select [Limited], only the preview images generated within the specified duration are displayed. In the case of exceeding the time limit, no preview image will be generated. Specify the time limit between 10 and 900 seconds in 1 second increments.

Note

- This feature may not be available depending on the model or your machine configuration. For information, contact out Customer Support Center.

Display Default of Stored Print Job List

Set the default of displaying the list of stored print files (Charge Print, Secure Print, Sample Print, or Delayed Print). Select [List] or [Thumbnail]. When you select [List], the list of stored print files is shown as default. When you select [Thumbnail], the preview images of stored print files are shown as default.

Note

- This feature may not be available depending on the model or your machine configuration. For information, contact out Customer Support Center.

Print Job Confirmation Screen

Set whether or not to display a print confirmation screen for deletion of the print files stored in the machine after printing. When [Enabled] is selected, the confirmation message appears. You can change the number of print sets if the print settings are permitted to be modified. When [Disabled] is selected, print files stored in the machine are automatically deleted after printing.

Minimum Passcode Length for Stored Jobs

Set the minimum number of allowed passcode digits between 0 and 12 digits. A passcode is required when Secure Print or Private Charge Print files are to be stored or printed.

A passcode must be a string consisting of the number of digits that is equal to or larger than the value specified here.

Note

- Specify "0" if you do not set passcodes or the minimum number of digits.

Print Order for All Selected Files

Specify the printing order when you select to print all print files stored.

■ Date & Time: Oldest First

Prints files in chronological order.

■ Date & Time: Newest First

Prints files in reverse chronological order.

■ File Name: Ascending

Prints files in ascending order by file name.

■ File Name: Descending

Prints files in descending order by file name.

Web Browser Setup

In [Web Browser Setup], you can configure the settings for the Web browser to be used when the machine accesses a web application using the Web Applications feature. Remote access allows you to view web application services, which are compatible withthe machine, directly on the touch screen, to upload a document that has been scanned on the machine to the web applications, and to directly select and print a document that is stored in the remote server. It also allows you to directly upload and print a file without going through another computer.

Note

- To use this feature, any Fuji Xerox manufactured web applications (purchase separately) are required. For more information, contact our Customer Support Center.

1. On the [Tools] screen, select [System Settings] > [Web Browser Setup].

Reference

- For the method of displaying the [Tools] screen, refer to "System Settings Procedure" (P.138).

2. Select an item to set or change.

Web Applications Version

Select a version of the Web applications service from [V2], [V4], and [V5].

Important

- If [V2] is selected, the following settings become invalid: [Delete Persistent Cookie Upon Closing], [Clear Cache Upon Closing], [Use Cache], [Accept Cookies], [Use TLS1.0], [When SSL Certificate Verification Fails], and [Enable File Printing].

Note

- When you use V3 of the web application version, select [V4].

Delete Persistent Cookie Upon Closing

Set whether or not to delete persistent cookie when connection to a Web application ends.

Clear Cache Upon Closing

Set whether or not to delete cache when connection to a Web application ends.

Use Cache

Set whether or not to use cache.

Accept Cookies

Set whether or not to accept cookies.

Select from [No], [Yes], and [Warn user when cookie is offered].

When you select [Warn user when cookie is offered], the machine behaves as when youselect [Yes].

Use TLS1.0

Set whether or not to use TLS 1.0.

When SSL Certificate Verification Fails

Set whether or not to stop accessing the site or to display a confirmation screen for access if SSL certificate verification fails.

Enable File Printing

Set whether or not to use the File Printing feature.The File Printing feature allows you to directly print the printable files obtained from the remote Web server.

Functional Code

Set the functional code as necessary when you use a remote linkage service.

Setup

In [Setup], you can create or update folders, job flows, and the Address Book.

Note

- This feature does not appear for some models. An optional component is required. For more information, contact our Customer Support Center.

The following shows the reference section for each setting.

"Create Folder" (P.276)

"Stored Programming" (P.279)

"Create Job Flow Sheet" (P.279)

"Create Job Flow Sheet Keyword" (P.288)

"Add Address Book Entry" (P.289)

"Create Fax Group Recipients" (P.299)

"Add Fax Comment" (P.300)

"Paper Tray Attributes" (P.300)

1. On the [Tools] screen, select [Setup].

Reference

- For the method of displaying the [Tools] screen, refer to "System Settings Procedure" (P.138).

2. Select an item to set or change.

Create Folder

Using the Folder function enables you to store scanned documents using the machine, fax received documents, or print documents sent from a computer in the machine.

You can also send a file stored in a folder via e-mail or retrieve a file stored in a computer on a network.

You can create a private folder and a public folder in the machine and use them separately depending on your purpose.

You can create up to 200 folders.

Reference

- You can check the current folders in a Folder List. For more information, refer to "Folder List" (P.122).

1. Select [Create Folder].

2 Select the folder to create.

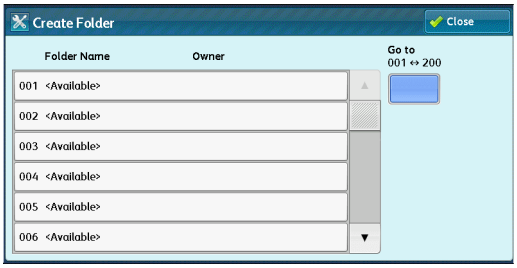

Note

- Select[▲]to display the previous screen or[▼]to display the next screen.
- Entering a 3-digit folder number with the numeric keypad displays the specified folder at the top of the column.

3 When you create a folder, the [New Folder - Passcode] screen appears. Select items, and then select [Save].

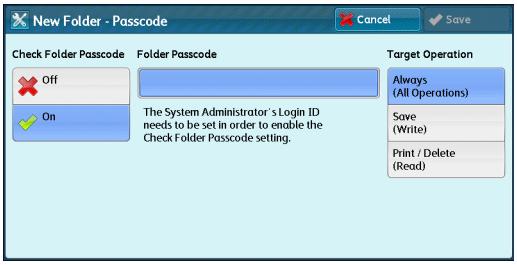

Note

- When you select a folder already created, the [Folder XXX - Create/Delete] screen appears.

Reference

- For more information on assigning a passcode, refer to "Check Folder Passcode" (P.277).

4 Select items and set the required settings.

5 When you finish required settings, select [Save].

Folder Name

Set the folder name. Enter up to 20 single-byte characters using the keyboard displayed or the numeric keypad.

Reference

- For information about how to enter characters, refer to "Entering Text" (P.45).

Check Folder Passcode

Set an access restriction to permit operations for specified users only.

■ Check Folder Passcode

Set whether or not to set a passcode.

■ Folder Passcode

Folder PasscodeTo use the Check Folder Passcode feature, enter a passcode. You can enter a passcode of up to 20 numeric digits (0 to 9).

■ **Target Operation**

Set the operations to be restricted.

◆ **Always (All Operations)**

You need to enter the passcode when storing a file in a folder and displaying the files in a folder for operations such as printing and deleting the files.

◆ **Save (Write)**

You need to enter the passcode only when storing a file in a folder.

◆ **Print/Delete (Read)**

You need to enter the passcode only when displaying the files in a folder for operations such as printing and deleting the files.

Delete Files After Retrieval

When a file stored in a folder is printed or is retrieved from a remote server, set whether the file should be deleted.

■ **No**

The file is left stored.

■ **Yes**

After the file is printed, or is retrieved by an external source, it is automatically deleted.

Note

- If you select [Yes], a file is not deleted when retrieved from CentreWare Internet Services.

Delete Expired Files

Specify whether or not to enable the operation to delete files stored in a folder at a specified time after a retention period has elapsed.

■ **No**

Even when the retention period has elapsed, files are not deleted.

■ **Yes**

Deletes expired files at the specified time. If, however, the expiration date has not beenspecified, files are not deleted even when [Yes] is selected.

Note

- When the machine is off at the deletion time of an expired file, the file is deleted next time the deletion time comes after the machine is turned on.

Reference

- For information on setting the file retention period, refer to "Expiration Date for Files in Folder" (P.271).

Link Job Flow Sheet to Folder

You can link a job flow sheet to a folder. Linking a job flow in which a series of actions is recorded to a folder enables you to set the processing method for files stored in a folder.

Reference

- For information on how to register a job flow, refer to "Create Job Flow Sheet" (P.279).

■ **Cut Link**

Cancels the link between a folder and a linked job flow sheet.

■ Create/Change Link

A screen to link a job flow sheet appears. You can select the existing job flow sheets or create a new job flow sheet.

Reference

- For more information about the operation, refer to "Create Job Flow Sheet" (P.279).

■ Auto Start

If you select the [Auto Start] check box, when a file is stored in a folder, the procedures registered on the job flow linked automatically starts.

When the [Delete Folder] Button is Selected

Selecting this button deletes the selected folder. Any files stored in the folder are also deleted.

If [Login Type] is set to [No Login Required], all the job flow sheets, including a local user created on the [Create Folder] screen or job flow sheets created on the [Send from Folder] screen, are deleted as well.

Important

- Once files or job flow sheets are deleted, they cannot be restored.

Stored Programming

The Stored Programming feature enables you to register frequently used settings and record a series of operations.

Reference

- For more information on operation, refer to "Stored Programming" > "Registering/Deleting/Renaming Stored Programs" in the User Guide.

Create Job Flow Sheet

Job flow is a feature to execute a series of registered actions. Up to 1000 job flow sheets can be created.

The target of a job flow is files stored in a folder. A job flow can be executed by using one of the following three methods:

- by automatically starting a job flow when a file is stored in a folder
- by selecting a file stored in a folder to manually execute the associated job flow
- by selecting a file stored in a folder to select a job flow and execute manually

To start a job flow automatically, you must link the job flow to a folder. When a file is stored in the folder, it is automatically processed in accordance with the job flow sheet linked.

Note

- To link a folder with a job flow sheet created with [Create Job Flow Sheet], start from [Send from Folder] or [Create Folder]. For more information, refer to "Send from Folder" in the User Guide and ""Create Folder" (P.276).

Features that can be registered are listed below.

- Forward to (FTP, SMB, e-mail, fax, IP fax, and Internet fax)

- Print

Depending on the method of storing in the folder, there are restrictions on the combination of features.

Output Iutput	Print	Fax	IP Fax(SIP)	Internet Fax *1	Mail	FTP	SMB
Fax Documents for Secure Polling	O	O	O	O	O	O	O
Scanning	O	O	O	O	O	O	O
Fax to Folder	O*2	O	O	O	O	O	O
Internet Fax Received	O	O	O	?	?	O	O
Print Stored	X	X	X	X	X	X	X

O : Available
X : Not available
? : Available depending on the SystemAdministration mode settings

*1 : Load an A4 document in landscape orientation when TIFF-S has been selected for the Internet fax forwarding profile. Loading the document in portrait orientation will reduce the size of the Internet fax image.
*2 : If the fax USB cable is disconnected while a received fax file in a folder is being printed, the file is not deleted after printing, even if the delete after printing setting is enabled in the folder settings.

Restrictions on Using Job Flow

A job flow can be used by single or multiple users, or can be used by linking to a specific folder. The Authentication feature restricts the use of the job flows.

Reference

- For information on the available Job Flow features and restrictions on use, refer to "Authentication for Job Flow Sheets and Folders" (P.435).

1 Select [Create Job Flow Sheet].

2 Carry out the job flow operation in accordance with your purpose.

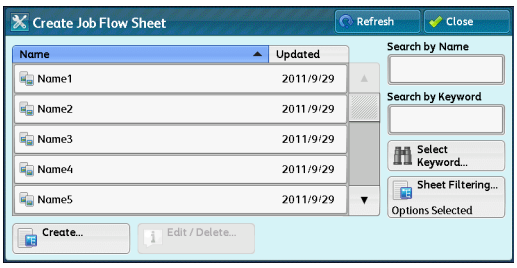

■ Sheet Filtering

You can filter the job flow sheets to display. Select the filtering conditions, and then select [Save].

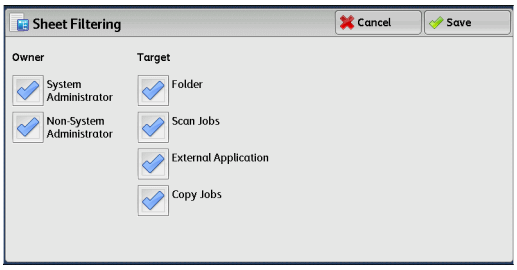

Note

- The screen displayed varies depending on the Login Type selected.

- Owner:Filters job flow sheets by owner type.
- Target:Filters job flow sheets by target, such as scan jobs and folders.

■ Create

Displays the [Create New Job Flow Sheet] screen.

Reference

- Refer to "Create New Job Flow Sheet" (P.281).

■ Edit/Delete

Displays the [Details] screen.

Reference

- Refer to "Edit/Delete" (P.288).

■ Search by Name

Searches for job flows that partially match the entry. The machine searches through job flow names that were registered upon each job flow creation. You can enter up to 128 single-byte characters.

Reference

- For information about how to enter characters, refer to "Entering Text" (P.45).

■ Search by Keyword

Searches for job flows that fully match the entry. The machine searches through keywords that were registered upon each job flow creation.

Reference

- For information about how to enter characters, refer to "Entering Text" (P.45).

■ Select Keyword

Displays the [Select Keyword] screen. Select a keyword registered in the System Settings to search for job flows. Job flows that fully match the entry are searched. The machine searches through keywords that were registered upon each job flow creation.

Reference

- For information on the keyword registry, refer to "Create Job Flow Sheet Keyword" (P.288).

Create New Job Flow Sheet

Create a new job flow.

1 Select an item to set, and then select [Edit].

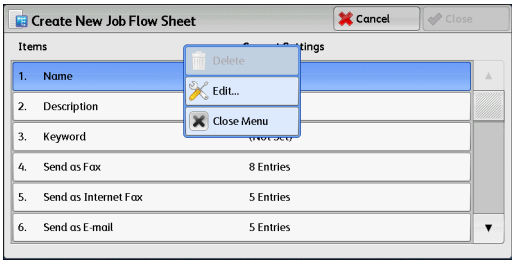

■ Delete

Deletes all setting values of the selected item.

■ Edit

Confirm or change the settings of the selected item.

■ Close Menu

Deselect the selected item.

Name

Set the name for the job flow sheet with up to 128 single-byte characters.

Description

Set the description of the job flow sheet with up to 256 single-byte characters.

Keyword

Enter a keyword with up to 12 single-byte characters for job flow search. You can also use the keywords that are registered for [Create Job Flow Sheet Keyword].

Reference

- For information on the job flow keyword search, refer to "Create Job Flow Sheet Keyword" (P.288).

Send as Fax

Specify destinations for fax transmission. You can specify a total of 100 destinations, either by selecting from the Address Book or by direct input.

Important

- You cannot use wildcards or group dial numbers.

■ Speed Dial

Specify an address with a speed dial. Enter the speed dial with the numeric keypad, and select [Save]. The address specified appears in [Name/Fax Number] in the [Send Fax] screen.

■ New Recipient

Specify a new address. The address specified appears in [Name/Fax Number] in the [Send Fax] screen.

■ Name/Fax Number

Displays the recipient name or fax number specified.

■ Delete Recipient

Deletes all information for the selected recipient.

■ Edit

Displays the [Edit Recipient] screen, which allows you to check or change the recipient selected.

Reference

- For more information on the [Edit Recipient] screen, refer to "5 Scan" in the User Guide.

■ Cancel

Deselect the selected item.

Send as IP Fax (SIP)

■ Speed Dial

Specify an address with a speed dial. Enter the speed dial with the numeric keypad, and select [Save]. The address specified appears in [Name/Fax Number] in the [Send as IP Fax (SIP)] screen.

■ New Recipient

Specify a new address. Select an item to change, and select [Change Settings]. The address specified appears in [Name/Fax Number] in the [Send as IP Fax (SIP)] screen.

■ Name/Fax Number

Displays the name and fax number specified.

■ Remove

Deletes all information for the selected recipient.

■ Edit

Displays the [Edit Recipient] screen, which allows you to check or change the recipient selected.

Reference

- For more information on the [Edit Recipient] screen, refer to "5 Scan" in the User Guide.

Send as Internet Fax

Specify destinations for fax transmission. You can specify a total of 100 destinations, either by selecting from the Address Book or by direct input.

Important

- You cannot use wildcards or group dial numbers.

■ Speed Dial

Specify an address with a speed dial. Enter the speed dial with the numeric keypad, and select [Save]. The address specified appears in [Name/E-mail Address] in the [Send Internet Fax] screen.

■ New Recipient

Specify a new address. The address specified appears in [Name/E-mail Address] in the [Send Internet Fax] screen.

■ Name/E-mail Address

Displays the recipient name or address specified.

■ Delete Recipient

Deletes all information for the selected recipient.

■ Edit

Displays the [Edit Recipient] screen, which allows you to check or change the recipient selected.

Reference

- For more information on the [Edit Recipient] screen, refer to "5 Scan" in the User Guide.

■ Close Menu

Deselect the selected item.

■ Message

Enter body message of an Internet fax with the keyboard displayed.

■ Internet Fax Profile

Select an Internet fax profile.

A profile is specified to restrict attribute information such as image resolution and paper size for transmissions between Internet Fax-enabled machines.

■ Resend Attempts

Set whether or not to try sending again if a transmission fails. If you select [On], set the number of resend attempts and interval.

◆ Resend Attempts

Set the transmission retry count from 1 to 5.

◆ Resend Interval

Set the transmission retry interval from 30 to 300 seconds.

■ Transmission Header Text

Set whether or not to add a Transmission Header Text to an Internet fax.

Send as E-mail

Specify the recipients for e-mail transmission.

You can specify a total of 100 addresses, either by selecting from the Address Book or by direct input.

If [Encryption] is set to [On], you cannot specify a recipient by selecting [New Recipient].

■ Address Book

You can specify the recipients from the Address Book. The address specified appears in [Name/E-mail] in the [Send E-mail] screen.

■ New Recipient

Specify a new address. The address specified appears in [Name/E-mail] in the [Send E-mail] screen.

■ Name/E-mail Address

■ Subject

Enter a subject using the keyboard displayed.

■ Delete Recipient

Deletes all information for the selected recipient information.

■ Edit

Displays the [Edit Recipient] screen, which allows you to check or change the recipient selected.

Reference

- For more information on the [Edit Recipient] screen, refer to "Scan" in the User Guide.

■ File Format

Select an output file format.

Reference

- For more information on the [File Format] screen, refer to "Scan" in the User Guide.

■ Resend Attempts

Set whether or not to try sending again if a transmission fails. If you select [On], set the number of resend attempts and interval.

◆ Resend Attempts

Set the transmission retry count from 1 to 5.

◆ Resend Interval

Set the transmission retry interval from 30 to 300 seconds.

■ Encryption

Set whether or not to encrypt the e-mail transmission.

Note

- To encrypt e-mail transmission, the configuration of S/MIME is required.
- To encrypt e-mail transmission, a certificate is required.
- To enable encryption, select [On] before specifying an address. [On] will be disabled after an address is specified.

■ Digital Signature

Select whether or not to add digital signature.

Note

- To add digital signature, the configuration of S/MIME is required.
- To add digital signature, a certificate is required.

Transfer via FTP (1), Transfer via FTP (2)

Specify where FTP forwarding is to be stored.

[Transfer via FTP (2)] will be displayed when [Transfer via FTP (1)] is configured.

■ Address Book

When the server address is registered on the Address Book, you can specify the address from the Address Book. The specified address appears in the [Transfer via FTP (1)] or [Transfer via FTP (2)] screen.

Reference

- For more information on the Address Book, refer to "Add Address Book Entry" (P.289).

■ File Format

Specify an output file format.

Reference

- For more information on the [File Format] screen, refer to "Scan" in the User Guide.

■ Resend Attempts

Set whether or not to try sending again if a transmission fails. If you select [On], set the number of resend attempts and interval.

◆ Resend Attempts

Set the transmission retry count from 1 to 5.

◆ Resend Interval

Set the transmission retry interval from 30 to 300 seconds.

■ Name, Server, Save in, User Name, and Password

Select [Name], [Server], [Save in], [User Name], or [Password] to display an input screen.

The numbers of characters you can input are as follows:

- Name: Up to 18 single-byte characters
- Server: Up to 64 single-byte characters
- Save in: Up to 128 single-byte characters
- User Name: Up to 97 single-byte characters
- Password: Up to 32 single-byte characters

Transfer via SMB (1), Transfer via SMB (2)

Specify where SMB forwarding is to be stored.

[Transfer via SMB (2)] will be displayed when [Transfer via SMB (1)] is configured.

■ Address Book

When the server address is registered on the Address Book, you can specify the address from the Address Book. The specified address appears in the [Transfer via SMB (1)] or [Transfer via SMB (2)] screen.

■ File Format

Specify an output file format.

■ Resend Attempts

Set whether or not to try sending again if a transmission fails. If you select [On], set thenumber of resend attempts and interval.

◆ Resend Attempts

Set the transmission retry count from 1 to 5.

◆ **Resend Interval**

Set the transmission retry interval from 30 to 300 seconds.

■ **Name, Server, Shared Name, Save in, User Name, and Password**

Select [Name], [Server], [Shared Name], [Save in], [User Name], or [Password] to display an input screen.

The numbers of characters you can input are as follows:

- Name: Up to 18 single-byte characters
- Server: Up to 64 single-byte characters
- Shared Name: Up to 64 single-byte characters
- Save in: Up to 128 single-byte characters
- User Name: For domain users: up to 97 characters with the format of “user name@domain name” or “domain name\user name” (user name and domain name must be up to 32 and 64 single-byte characters respectively) For local users: up to 32 single-byte characters
- Password: Up to 32 single-byte characters

Print

Configure print settings. When [On] is selected, you can configure the settings for the Print feature.

■ **Print Quantity**

Set the number of copy sets from 1 to 999 in 1 set increments.

■ **Paper Supply**

Select a paper tray for printing. When [Auto Select] is selected, the same paper size as the document size is used.

◆ **Auto Select**

A suitable paper tray is automatically selected.

◆ **Trays 1 to 4**

Select paper from four trays.

◆ **Bypass**

Prints on paper loaded in Tray 5.

■ **2 Sided Printing**

Set the 2 sided printing option.

■ **Output**

Configure the stapling, hole punch, and output destination settings.

◆ **Staple**

Set the position for stapling.

◆ **Hole Punch**

Set the position for punching.

◆ **Output Destination**

Set the output destination.

E-mail Notification

You can receive an e-mail notification when a file is saved in a folder or a job flow ends.

■ Name/E-mail Address

Set the recipient of the e-mail notification.

■ Message

Enter a message that is displayed in the e-mail message body.

■ When to Notify

Select the e-mail notification timing from [When file is stored] and [At the end of Job Flow].

■ Delete Recipient

Deletes all information for the selected recipient.

■ Edit

Allows you to check or change the recipient selected.

Reference

- For more information, refer to "Create Fax Group Recipients" (P.299).

■ Close Menu

Deselects the selected item.

Edit/Delete

You can check the content of a job flow sheet, and edit, copy, or delete it.

Note

- Some operations may be restricted according to types of job flow owners, authentication settings, and user types. For more information, refer to "Authentication for Job Flow Sheets and Folders" (P.435).

■ Delete

Deletes the selected job flow sheet.

■ Copy

Creates a duplicate of the selected job flow sheet. You can create a new job flow sheet based on the duplicate.

Reference

- The procedure of creation is the same as creation of a new job flow sheet. For more information, refer to "Create New Job Flow Sheet" (P.281).

■ Edit

You can edit the selected job flow sheet.

Reference

- The procedure of change is the same as creation of a new job flow sheet. For more information, refer to "Create New Job Flow Sheet" (P.281).

Create Job Flow Sheet Keyword

You can register job flow search keywords. The registered keywords are displayed under [Select Keyword] and allows you to use for job flow sheet search. The keywords are also

available from a list under [Keyword] that is displayed when you create a new job flow sheet.

Up to 12 single-byte characters are allowed for a job flow search keyword.

Add Address Book Entry

You can register frequently used addresses on the Address Book. Select an addresstype from Fax, IP Fax (SIP), Internet Fax, E-mail, and Server (FTP/SMB).

When an address is registered, you can search for it with [Address Book] on the [Fax], [IP Fax (SIP)], [Internet Fax], and [E-mail] screens.

You can store a total of 2000 addresses for Fax, IP Fax (SIP), Internet Fax, E-mail, and Server (FTP/SMB).

Important

- The following address types can be selected when you add an address to Address Book: Fax, IP Fax (SIP), Internet Fax, E-mail, and Server (FTP/SMB) When you register an address on the Address Book, select an address type in accordance with the service. The address book entry registered with the wrong address type cannot be selected from the original service.

Note

- The address numbers correspond to the one touch buttons. The one touch buttons are available for fax, IP Fax (SIP), Internet Fax, E-mail, and Scan to PC. For more information on the relationship between the address numbers and the one touch buttons, refer to "One-touch Buttons" (P.153).
- To specify an e-mail or server (FTP/SMB) address (for insertion in the Address Book), it is not possible to use a speed dial specified with the numeric keypad, one-touch dialing, or a group dial number.
- To specify an e-mail address or a server address for the Scan services, use the Address Book. The speed dial with the numeric keypad, the one touch buttons, and the group address created using the Group Recipients feature cannot be used to specify such addresses.
- You can register, edit, delete, or view the Address Book from CentreWare Internet Services. For more information, refer to the help of CentreWare Internet Services.

Important

- To display the online help for CentreWare Internet Services, users need to have the environment to connect to the internet. The communication fee shall be borne by you.

1 Select [Add Address Book Entry].

Note

- To display the [Add Address Book Entry] screen, press the <Log In/Out> button and enter the system administrator's user ID, and then select [Tools] > [Setup] > [Add Address Book Entry]. If [Setup] is displayed on the Services Home screen, select [Setup] > [Add Address Book Entry]. When users are prohibited from editing the Address Book in the System Administration mode, [Add Address Book Entry] cannot be selected in [Setup] on the Services Home screen.

2 Press a speed dial to register.

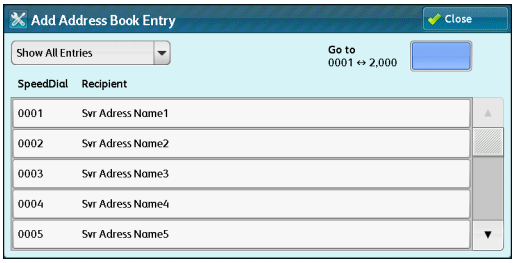

Note

- Select[▲]to display the previous screen or[▼]to display the next screen.
- Entering a speed dial number with the numeric keypad displays the specified number at the top of the column.

3 Select [Address Type].

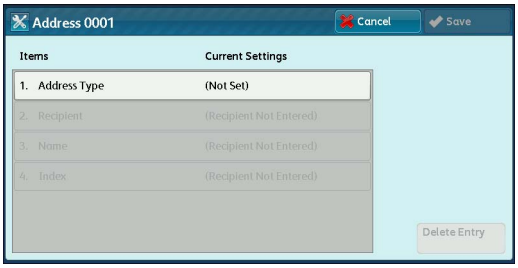

4 Select the address type, and then select [Save].

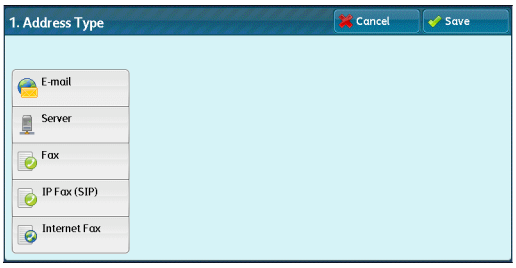

5 Select an item to set and set.

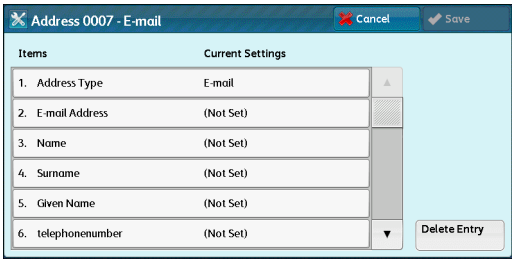

6 When the settings are completed, select [Save].

■ When selecting [E-mail] as the address type

The following items appear:

- Address Type
- E-mail Address
- Name
- Index
- Surname
- Given Name
- Custom Item 1 (Telephone Number*)
- Custom Item 2 (Office*)
- Custom Item 3 (Department*)
- S/MIME Certificate

*: Factory default setting

■ When selecting [Server] as the address type

The following items appear:

- Address Type
- Name
- Index
- Transfer Protocol
- Server Name/IP Address
- Save In
- User Name
- Password
- Port Number
- Shared Name (SMB Only)

■ When selecting [Fax] as the address type

The following items appear:

- Address Type
- Fax Number
- Name
- Index
- Starting Rate
- Resolution
- Cover Page
- Maximum Image Size
- Delay Start
- Remote Folder
- F Code
- Relay Broadcast
- Billing - Day Time
- Billing - Night Time
- Billing - Midnight

■ When selecting [IP Fax (SIP)] as the address type

The following items appear:

- Address Type
- Recipient (Fax Number)
- Name
- Index
- Starting Rate
- Delay Start
- Remote Folder
- F Code
- Relay Broadcast
- Billing - Day Time

- Resolution
- Cover Page
- Maximum Image Size
- Billing - Night Time
- Billing - Midnight

■ **When selecting [Internet Fax] as the address type**

The following items appear:

- Address Type
- E-mail Address
- Name
- Index
- S/MIME Certificate
- Starting Rate
- Resolution
- Maximum Image Size
- Internet Fax Profile

Address Type

Allows you to change an address type.

E-mail Address

Enter an e-mail address with up to 128 single-byte characters.

Reference

- For information about how to enter characters, refer to "Entering Text" (P.45).

Name

Enter a recipient name with up to 18 single-byte characters.

Reference

- For information about how to enter characters, refer to "Entering Text" (P.45).

Index

You can register a single alphanumeric index character for use as a keyword when listing the registered recipients in alphabetical order.

Reference

- For information about how to enter characters, refer to "Entering Text" (P.45).

Surname

Enter a recipient surname with up to 32 single-byte characters

Reference

- For information about how to enter characters, refer to "Entering Text" (P.45).

Given Name

Enter a recipient given name with up to 32 single-byte characters

Reference

- For information about how to enter characters, refer to "Entering Text" (P.45).

Custom Item 1

The attribute name set as [Attribute Name of Custom Item 1] is shown as the item name.

By factory default, the item name is set to "Telephone Number". You can input anyinformation as an auxiliary item. Up to 20 single-byte characters are allowed. This item is suitable for information represented by a shorter character string, such as telephone number and employee number.

Reference

- For more information on the item name, refer to "Attribute Name of Custom Items 1, 2, and 3" (P.219).

Custom Item 2

The attribute name set as [Attribute Name of Custom Item 2] is shown as the item name.

By factory default, the item name is set to "Office". You can input any information as an auxiliary item. Up to 40 single-byte characters can be used. This item is suitable for information represented by a longer character string, such as company name and department name.

Reference

- For more information on the item name, refer to "Attribute Name of Custom Items 1, 2, and 3" (P.219).

Custom Item 3

The attribute name set as [Attribute Name of Custom Item 3] is shown as the item name.

By factory default, the item name is set to "Department". You can input any information as an auxiliary item. Up to 60 single-byte characters can be used. This item is suitable for information represented by a much longer character string, such as company division name and company address.

Reference

- For more information on the item name, refer to "Attribute Name of Custom Items 1, 2, and 3" (P.219).

S/MIME Certificate

Allows you to link an S/MIME certificate. The S/MIME certificate must be registered in advance.

To link a certificate, select [Attach/Change Link] and select a certificate in a screen displayed. To remove a link, select [Remove Certificate].

Important

- If a certificate linked to an S/MIME certificate in the Address Book is deleted by some reasons such as hard disk initialization and the deletion of the certificate, the certificate linked to the S/MIME certificate will be invalid. Even if you re-register the S/MIME certificate, you have to manually link it again.

Note

- If many certificates are registered on the machine, it may take a long time to link a certificate.

Transfer Protocol

Set the transfer protocol. You can select either [FTP] or [SMB].

Server Name/IP address

Enter a name or an IP address of a forwarding destination server.

Shared Name (SMB Only)

Enter the shared name set for the SMB folder.

Important

- If the "/" mark is used at the top of a shared name, a job flow cannot read the shared name correctly. Do not use the "/" mark at the top of a shared name.

Save in

Enter the directory for storing files. When SMB is selected, use a UNC format.

◆ **Transferring via FTP**

For example: aaa/bbb

When you save files in the bbb directory under the aaa directory in the root directory.

◆ **Transferring via SMB**

For example: aaa\bbb

When you save files in the bbb directory under the aaa directory in a specified volume.

User Name

Set the user name when a user name is required to be input by the forwarding destination server.

When [FTP] is selected for [Transfer Protocol], up to 97 characters are allowed.

When [SMB] is selected for [Transfer Protocol], use one of the following formats:

◆ **For Active Directory:**

User name@Domain name (User name: up to 32 characters / Domain name: up to 64 characters)

For example: fuji@example.com ("fuji" is a user name and "example.com" is a domain name)

◆ **For Windows NT®domains:**

Domain name\User name (Domain name: up to 64 characters / User name: up to 32characters)

For example: example\fuji ("example" is a domain name and "fuji" is a user name)

◆ **For workgroups:**

Local user (up to 32 characters)

For example: Fuji-Taro

Password

Set a password when the forwarding destination server prompts a password entry. You can enter up to 32 single-byte characters for a password.

Port Number

Set the forwarding destination port number. Specify a number from 1 to 65535.

Fax Number

Enter a fax number with up to 128 digits.

Reference

- For information about how to enter characters, refer to "Entering Text" (P.45).

Index

You can register a single alphanumeric index character for use as a keyword to search with the Address Book.

Reference

- For information about how to enter characters, refer to "Entering Text" (P.45).

Starting Rate

Set a communications mode. You can select from [G3 Auto], [Forced 4800bps], and [G4 Auto].

When the destination is specified by a speed dial number with the communications mode set, you cannot change the communications mode in the [Fax/Internet Fax] screen.

Note

- [G4 Auto] is displayed only when Internet fax addresses are selected.

Resolution

Set image quality for transmission.

Select from [Panel] (image quality selected on the control panel), [Standard (200x100 dpi)], [Fine (200 dpi)], [Superfine (400 dpi)], and [Superfine (600 dpi)].

Cover Page

Select whether or not to send a fax or an Internet fax with a cover note attached. If attached, specify comments on the sender and a recipient to be printed in the cover pages.

Comments must be registered in advance.

Reference

- For information on comment registration, refer to "Add Fax Comment" (P.300).

1 Select [Print Cover Page].

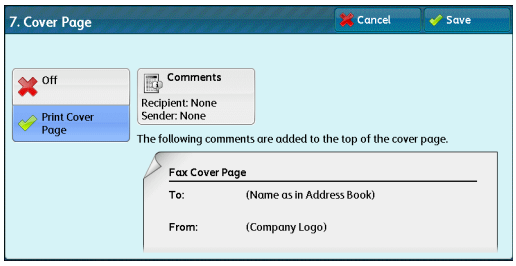

2 Select [Comments].

3 Select any comment from the list of comments displayed under [Recipient's Comment] and [Sender's Comment].

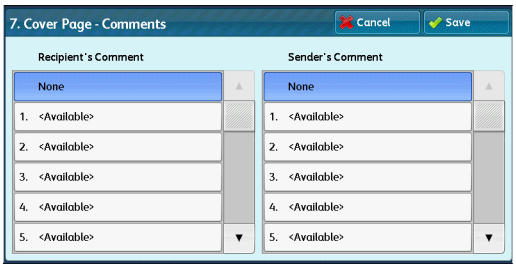

Note

- Select[▲]to display the previous screen or[▼]to display the next screen.

4 Select [Save]. The image of the Fax Cover Page is displayed.

5 Select [Save].

Maximum Image Size

Select the maximum image size from [A3], [B4], or [A4] to match the recipient's paper size or available profile.

Delay Start

Set whether or not to use a delayed start transmission.

Reference

- If the machine's system clock is set to the 24-hour display, [AM] and [PM] do not appear. For information on the system clock, refer to "Time" (P.147).

Remote Folder

Select whether or not to send a fax or an Internet fax to a recipient's folder. To use folder communications, you must obtain the recipient's folder number and passcode in advance.

1 Select [On].

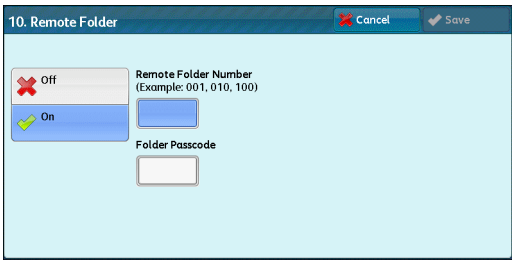

2 Enter a recipient's folder number with the numeric keypad.

3 If a passcode is set, enter the passcode with the numeric keypad.

Note

- If no passcode is set, leave the text boxes blank and select [Save].

F Code

Select whether or not to use F code communications.

F Code is the transmission procedure set by the Communications and Information Network Association of Japan and is the T.30 (communication protocol) method for using subaddresses that are standardized by the ITU-T.

For F code (sub address) and password, you can use up to 20 digits 0 to 9, *, and #.

1 Select [On].

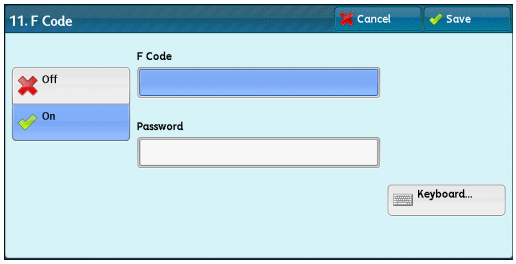

2 Enter the F code with the numeric keypad.

Note

- The F code consists of “0” + folder number. For example, if the folder number is 123, the F code will be “0123”.

3 Enter the password as required with the numeric keypad, and then select [Save].

Note

- You can enter up to 20 digits for the password.

Relay Broadcast

Set the instruction given to a relay station, which is used when the machine is a base station and the registered speed dial is a relay station for relay broadcast.When selecting [On], set [Relay Station ID], [Print at Relay Station], and [BroadcastRecipients].

1 Select [On].

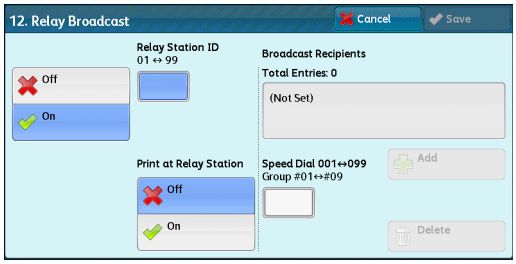

2 Enter a 2-digit relay station ID with the numeric keypad.

Note

- The relay station ID is the address number for the base station (the machine) already registered on the relay station.

3 Select [Speed Dial 001<->099].

4 Enter a speed dial number of broadcast destination (001 to 099) or group number (#01 to #09) registered on the relay station with the numeric keypad, and then select [Add].

Note

- If there are more than one broadcast destinations, repeat step 4.

5 To print a document also at the relay station, under select [On] for [Print at Relay Station].

6 Select [Save].

Billing - Day Time, Billing - Night Time, Billing - Midnight

Set the connection time for one unit charge in each of the time bands (daytime/night/midnight).

You can set a value from 0.1 to 255.9 seconds in 0.1 second increments.

Reference

- This item is displayed when [Accounting] > [Accounting Type] is set to [Local Accounting] and [Fax/Internet Fax Service] is set to [Enable Accounting] under [Auditron Mode]. For information on how to enable the feature, refer to "Auditron Mode" (P.308).
- The information registered can be confirmed by printing a Billing Data List. For information about how to print, refer to "Billing Data List" (P.122).

1 Select one of [Billing - Day Time], [Billing - Night Time], and [Billing - Midnight].

2 Select [Billing].

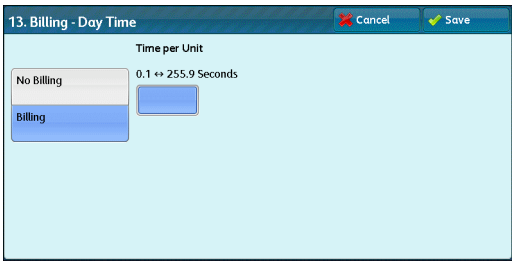

3 Enter the time for one unit charge from 0.1 to 255.9 seconds in 0.1 second increments with the numeric keypad.

4 Select [Save].

Internet Fax Profile

Set the format of the Internet fax profile.

A profile is specified to restrict attribute information such as image resolution and paper size for transmissions between Internet Fax-enabled machines.

■ TIFF-S

The Internet fax standard profile. For documents larger than A4, the size is automatically reduced to A4 when transmission.

■ TIFF-F

Select this profile when you specify [Superfine] for [Resolution] or when you send A3 or B4 documents.

■ **TIFF-J**

Select this profile for sending documents in JBIG.

When the [Delete Entry] Button is Selected

Selecting this button deletes all the information registered for the address selected. To delete all information registered, select [Delete].

Important

- Deleted information cannot be restored.

Create Fax Group Recipients

You can register addresses for broadcast transmission as a group. Each group caninclude up to 20 address numbers. The maximum number of groups that can beregistered is 50.

Note that recipients to be added to a group must be registered in the speed dials on the Address Book.

Note

- Even when the speed dial number of fax recipients (address book entries) are included in a group, the machine does not send faxes to the recipients if their address types are set to [Email] or [Server].
- You cannot include a group in another group.
- You can use wildcards for specifying the numbers in the last one or two digits as shown in the following example:
  - 001*:Specifies the 10 addresses with address numbers 010 to 019.
  - ****:Specifies all address numbers.

1 Select [Create Fax Group Recipients].

2 Select a group number to register.

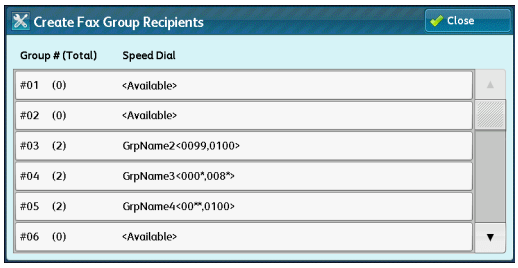

Note

- Select[▲]to display the previous screen or[▼]to display the next screen.

3 Select [Group Name] and enter a group name to register, and then select [Save].

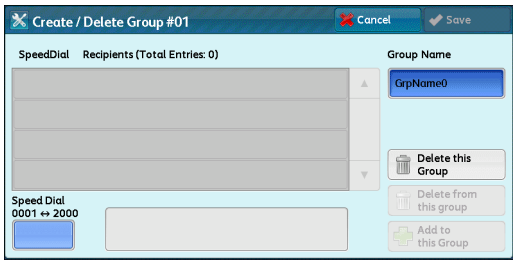

4 Enter a speed dial number (four digits) to register with the numeric keypad, and then select [Add to this Group].

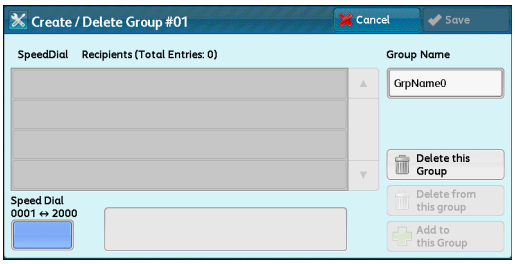

5 Repeat step 4 to register the address numbers.

6 Select [Save].

■ Delete this Group

Deletes all information registered on a group.

■ Delete from this group

Deletes a registered address.

Select the speed dial or enter the speed dial number to delete with the numeric keypad, and then select [Delete from this group].

Add Fax Comment

You can register comments to be printed on cover sheets. A maximum of 50 comments can be registered, each of which can be up to 36 single-byte characters.

Reference

- For information about how to enter characters, refer to "Entering Text" (P.45).

Paper Tray Attributes

Set a paper size and a paper type load in each tray.

Reference

- For more information, refer to "Paper Tray Attributes" (P.158).

Accounting

In [Accounting], you can register the users that will use the machine, and set the operation settings of the Accounting feature.

Reference

- For more information about this feature, refer to "Authentication and Accounting Features" (P.423).

"Create/View User Accounts" (P.301)

"View Accounts" (P.305)

"Reset User Accounts" (P.305)

"System Administrator's Meter (Copy Jobs)" (P.307)

"Accounting Type" (P.307)

"Accounting Login Screen Settings" (P.308)

"Fax Billing Data" (P.310)

"Accounting/Billing Device Settings" (P.310)

1. On the [Tools] screen, select [Accounting].

Reference

- For the method of displaying the [Tools] screen, refer to "System Settings Procedure" (P.138).

2. Select an item to set or change.

Create/View User Accounts

To enable the Accounting feature, register user IDs and user names to authenticate registered users.

You can set a limit on the number of pages for each user of the machine. You can also check the cumulative number of pages for each user registered. Up to 1,000 user data can be registered. The settings described here are identical with [Create/View User Accounts] under [Authentication] of [Authentication/Security Settings].

Important

- Before registering users, refer to "Accounting Type" (P.307) and set the Accounting Type you use.

Note

- This item does not appear when [Network Accounting] is selected in "Accounting Type" (P.307).

1. Select [Create/View User Accounts].

2 Select a [User ID] for which you want to register a user, and then select [Create/ Delete].

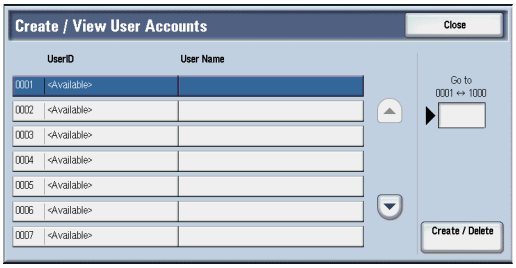

Note

- A 4-digit number displayed on the left of each User ID is a user control number.
- Selecting a line displayed as [<Available>] displays a screen to enter User ID. Enter a User ID, and then select [Save].
- Select[▲]to display the previous screen or[▼]to display the next screen.
- Entering a 4-digit User ID number with the numeric keypad displays the specified number at the top of the column.

3 Select any item, and set it.

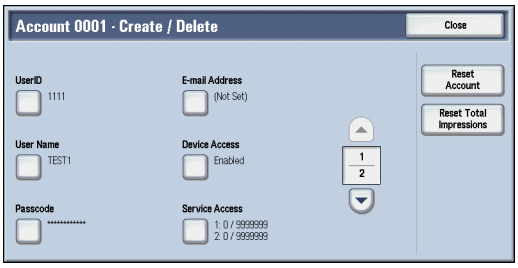

4 Select [Close].

User ID

Enter a user ID to use the machine. Up to 32 single-byte characters are allowed.

User Name

Set a user name. Up to 32 single-byte characters are allowed.

Reference

- For information about how to enter characters, refer to "Entering Text" (P.45).

Passcode

Set a passcode. Setting a passcode is strongly recommended for security. Set a passcode from 4 to 12 digits.

Note

- When [Passcode Entry for Control Panel Login] is set to [On], a passcode entry is required upon user authentication.

Reference

- For information on how to change your passcode later, refer to "Changing Passcode" (P.449).

E-mail Address

Enter an e-mail address with up to 128 characters. The address set here will be set as [From] under [E-mail].

Reference

- For information about how to enter characters, refer to "Entering Text" (P.45).

Device Access

Set whether to allow the machine use.

■ Enabled

Allows the machine use. When the smart card reader is connected, you can select the settings for each Login Type.

■ Disabled

Prohibits the machine use.

Service Access

You can place restrictions on the use and the maximum number of allowed pages for each of the Copy, Fax, Scan, and Print services.

1. Select [Service Access].
2. Select a feature to restrict.

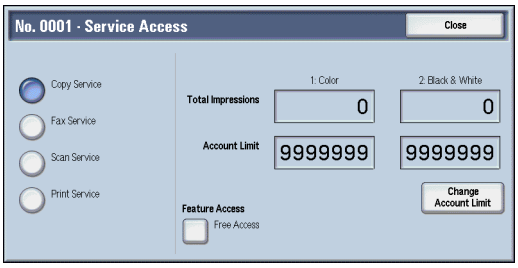

3. To set account limits, select [Change Account Limit], and then enter the maximum number of pages with the numeric keypad.

■ Feature Access

Set access restrictions on features.

◆ Free Access

The feature is not restricted.

◆ No Access to Copy/Fax/Scan/Print Service

Allows you to restrict the use of the Copy, Fax, Scan, or Print service.

■ Change Account Limit

Set the maximum number of pages for copying, scanning, or printing.

You can specify a number from 1 to 9,999,999 (7 digits) pages in 1 page increments.

- The following limits can be placed on the Copy service for each user: Permission to use: [Free Access], [Black & White Only], [Color Only], or [No Access to Copy Service]

Maximum number of color pages allowed: 1 to 9,999,999 Maximum number of black-and-white pages allowed: 1 to 9,999,999

- The following limits can be placed on the Fax service for each user: Permission to use:[Free Access] or [No Access to Fax Service]
- The following limits can be placed on the Scan service for each user: Permission to use: [Free Access], [Black & White Only], [Color Only], or [No Access to Scan Service] Maximum number of color pages allowed: 1 to 9,999,999 Maximum number of black-and-white pages allowed: 1 to 9,999,999
- The following limits can be placed on the Print service for each user: Permission to use: [Free Access], [Black & White Only], or [No Access to Print Service] Maximum number of color pages allowed: 1 to 9,999,999 Maximum number of black-and-white pages allowed: 1 to 9,999,999

User Role

■ User Role

Allows you to select a user role for a user.

◆ User

No special authority is given to this user role.

◆ System Administrator

The same authority as a system administrator is given except for the following operation:

- Operate folders
- Operate job flow sheets
- Change the passcode of the system administrator

◆ Account Administrator

The following authorities are given:

- Create, delete, change (except for passcode), and view (unavailable depending on some settings) user information
- Create, delete, change, and view accounting
- Change an Alternative Name for Account ID or Mask Account ID
- Print an Auditron Report for each user

■ Add This User to Authorization Group

Allows you to select an authorization group for a user.

Reset User Account

Deletes all registered information for a selected user.

■ Reset

Deletes the registered user data. Once deleted, the data cannot be restored.

Important

- All job flow sheets, folders, and files within folders belonging to the user are deleted. If the user is owner of a large amount of material (when a large quantity of files is left remaining within a folder for example), the deletion will take a considerable time.

■ **Cancel**

Cancels the deletion of the user data.

Reset Total Impressions

Resets the current cumulative number of pages for a selected user, returning it to zero.

■ **Reset**

Resets the current cumulative number of pages for users. Once reset, the previous count cannot be restored.

■ **Cancel**

Cancels resetting the cumulative number of pages.

View Accounts

Selecting [Xerox Standard Accounting] on the [Accounting Type] screen allows you to check the following for each registered user or group: (1) the maximum number of times that the account can be used for each service, and (2) how many times the account has been used for each service.

Important

- To display the online help for CentreWare Internet Services, users need to have the environment to connect to the internet. The communication fee shall be borne by you.

Note

- You can register users and groups on CentreWare Internet Services. For more information, refer to the help of CentreWare Internet Services.

Note

- This feature does not appear for some models. An optional component is required. For more information, contact our Customer Support Center.

1. Click [View Accounts].
2. Select [User Account] or [Group Account]. If you select [User Account], select also the User ID to check.
3. Click [Account Details].

Reset User Accounts

You can delete all registered information for all registered users in a single operation, or reset the auditron data. It is also available to print contents for confirmation before resetting. The settings described here are identical with [Reset User Accounts] under [Authentication] of [Authentication/Security Settings].

Note

- This item does not appear when [Network Accounting] or [Xerox Standard Accounting] is selected in [Accounting Type].

All User Accounts

Deletes all information registered for each user. It also deletes all data including the maximum number of pages, cumulative number of pages, and printer auditron data.

Important

- All job flow sheets, folders, and documents within folders belonging to the user are deleted. If the user is owner of a large amount of material (when a large quantity of files is left remaining within a folder for example), the deletion will take a considerable time.

All Feature Access Settings

Resets the feature access limit for all users.

All Account Limits

Resets the maximum number of pages for all users to the default (9,999,999 pages).

Total Impressions

Resets all accounting data for all users including the system administrator. The number of pages is also reset to 0.

All Authorization Groups

Delinks users from authorization groups, and links those users to the default authorization group.

Meter (Print Jobs)

Resets all printer auditron, and deletes automatically registered job owner names. The number of pages printed is also reset to 0.

Note

- [Meter (Print Jobs)] is displayed when [Disable Accounting] is selected for [Print Service] in the [Auditron Mode] screen under [Accounting Type].

Print the Auditron Report

Prints a report including contents registered information to reset or a report including contents administration data to reset. The report is available for confirmation before resetting.

Print the Meter Report

Prints a meter report, which is helpful when you check counters before you reset or delete them.

Note

- [Meter (Print Jobs)] is displayed when [Disable Accounting] is selected for [Print Service] in the [Auditron Mode] screen under [Accounting Type].

Reset

Deletes or resets the data for the selected item.

System Administrator's Meter (Copy Jobs)

You can check or reset the total impression copied using the System Administration mode on the screen.

The total impressions are counted up to 9,999,999 pages.

Note

- This item does not appear when [Network Accounting] is selected in [Accounting Type].

Accounting Type

You can select whether or not to use the Accounting feature.

Accounting Disabled

Does not perform accounting.

Local Accounting

Performs accounting.

Network Accounting

Performs accounting based on the user information managed on a remote service. User information is registered on the remote service.

Note

- When [Network Accounting] is selected, users are prompted to enter their Account ID on the [Login] screen that is displayed when attempting to use services required for accounting.

Reference

- For more information on Network Accounting, refer to "Types of Account Administration" (P.428).

Xerox Standard Accounting

Accounting is carried out based on the user information and account information preregistered on the machine.

Note

- This feature does not appear for some models. An optional component is required. For more information, contact our Customer Support Center.

Auditron Mode

Allows you to set whether or not to enable the Auditron feature for the following services:

- Copy
- E-mail
- Store to USB
- Media Print - Text
- Fax/Internet Fax
- Network Scanning
- Store & Send Link
- Media Print - Photos
- Store to Folder
- Scan to PC
- Store to WSD
- Print

Note

- WSD stands for Web Services on Devices.
- The services displayed on the screen vary depending on the machine configuration.
- When [Enable Accounting] is selected for a service, [ ] is displayed on the button of the applicable service on the Services Home screen. Also, [: Requires Login] is displayed at the lower left of the Services Home screen. [ ] and [: Requires Login] are not displayed after authentication.
- Print jobs may be canceled depending on the settings in "Receive Control" (P.322).

Verify User Details

Allows you to set whether or not to verify user information.

Selecting [Yes] also allows you to select [For printer/Direct Fax Jobs].

Customize User Prompts

Allows you to set the type of user information used for authentication.

Note

- Account ID is used for accounting.

- Display User ID & Account ID Prompts

  Prompts users to enter both their user ID and Account ID.
- Display User ID Prompt Only

  Prompts users to enter their user ID only.
- Display Account ID Prompt Only

  Prompts users to enter their Account ID only.
- Display No Prompts

  Does not prompt users to enter their user ID or Account ID.

Accounting Login Screen Settings

You can configure Accounting settings.

Alternative Name for User ID

If required, you can change the indication "UserID" on the [Login] screen that appears when the <Log In/Out> button on the control panel or the login information area on the touch screen is pressed to another name such as "User Name" or "Number". The alias can be set to 1 to 15 single-byte characters.

Note

- The name changed is also printed in a report or a list.

Mask User ID (***)

You can set how an entered user ID is shown on the screen. Use this feature to enhance security as required.

■ Show

As you enter the user ID, the characters are echoed on the screen in the normal way.

■ Hide

As you enter the user ID, the character string is hidden as a row of asterisks (*****).

Alternative Name for Account ID

If required, you can change the indication "Account ID" on the [Login] screen that appears when the <Log In/Out> button on the control panel or the login information area on the touch screen is pressed to another name such as "Account Name" or "Number". The alias can be set to 1 to 15 single-byte characters.

Note

- This item is displayed when [Network Accounting] is selected in [Accounting Type].
- The name changed is also printed in a report or a list.

Mask Account ID (***)

You can set how an entered Account ID is shown on the screen. Use this feature to enhance security as required.

Note

- This item is displayed when [Network Accounting] is selected in [Accounting Type].

■ Show

As you enter the Account ID, the characters are echoed on the screen in the normal way.

■ Hide

As you enter the Account ID, the character string is hidden as a row of asterisks (*****).

Display Billing Information Upon Login

You can set whether to display billing information per user when a user logs in.If you select [Enabled], users can check their billing information: [Impressions], [Account Limit], and [Balance] for each of the services (copying, printing, and scanning).

Note

- This item is displayed when [Login to Local Accounts] is selected in [Login Type] and [Local Accounting] is selected in [Accounting Type].
- Only the billing information for the services that the user is allowed to use will be displayed.
- When a user logs in as the system administrator, billing information will not be displayed.

Fax Billing Data

You can configure fax billing settings.

Important

- To register the billing data, enable the Auditron feature for fax/Internet fax under Accounting in advance. For details on how to enable the Auditron feature, refer to "Auditron Mode" (P.308).

Note

- Set the connection time for one unit charge in each of the time bands (daytime/night/ midnight) in [Billing]. For more information on how to set [Billing], refer to "Billing - Day Time, Billing - Night Time, Billing - Midnight" (P.298).
- The registered details can be confirmed by printing the Billing Data List. For information on how to print, refer to "Billing Data List" (P.122).

1 Select [Fax Billing Data].

2 Select [Charge Rate per Unit].

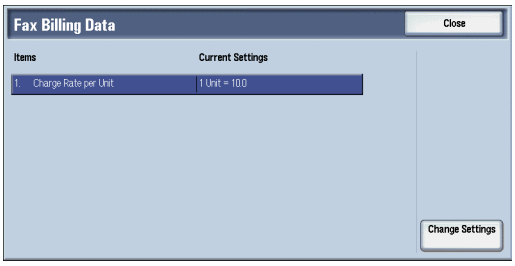

■Charge Rate per Unit

This is a communication charge per unit. You can set a value from 0.1 to 255.9 seconds in 0.1 second increments.

3 Select [Change Settings].

4 Enter an amount with the keyboard displayed on the screen or the numeric keypad.

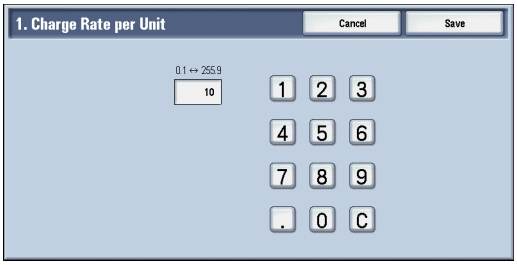

5 Select [Save].

Accounting/Billing Device Settings

You can configure accounting or billing device settings.

Important

- When an accounting or billing device is connected to the machine, be sure to set a password and that users other than the system administrator do not disconnect the device by mistake.
- The features described in this section may not appear for some models. Optional components or related products provided by Fuji Xerox are required to use the features. For more information, contact our Customer Support Center.

Connect with Accounting/Billing Device

Allows you to select whether or not to use the connected accounting or billing device from [None] or [Connected].

Note

- While a device for maintenance is connected, you cannot change the setting.

Accounting/Billing Device

Select the type of the accounting/billing device connected to the machine.

Important

- If a device connected does not match the device selected in [Accounting/Billing Device], an error occurs. Jobs related to the accounting/billing device cannot be performed until the error is resolved. For information on how to resolve the error, refer to "Error Code" (P.496).

Track Print Jobs

This feature is effective for the Print service.

Select whether or not to track billing information for the print jobs. Select from [No Tracking] and [Track with Accounting/Billing Device].

This feature is available for all accounting/billing devices.

Track Scan/Fax Jobs

This feature is effective for the Scan, Fax, Internet Fax, and Server Fax services.

Select whether or not to track billing information for the scan, fax, Internet fax, and server fax jobs. Select from [No Tracking] and [Track with Accounting/Billing Device].

This feature is available for accounting/billing devices other than Coin Kit and Dispenser.

Interrupt Mode

This feature is effective for the Copy service.

Select whether or not to enable the Interrupt mode. Select from [Disabled] and [Enabled].

This feature is available for accounting/billing devices other than Card Activated - Cumulative and Smart Card Reader.

Job with Insufficient Credit

This feature is effective for the Copy, Print, and Scan services.

Select the operation of the machine when the amount remaining in the accounting/billing device becomes insufficient. Select from [Delete Job Immediately] and [Hold Job].

This feature is available for accounting/billing devices other than Card Activated - Cumulative and Smart Card Reader.

Charge Print Jobs

This feature is effective for the Print service.

Select how the print job performed is charged. Select from [Charge by Card Number] and [Do not Charge by Card Number].

This feature is available for Card Activated - Cumulative and Card Activated - Subtractive.

Track with Cumulative Device

This feature is effective for the Copy and Print services.

Select the timing that the amount for copy or print job is charged. Select from [Track with Accounting Device] and [High Speed Printing].

This feature is available for Card Activated - Cumulative.

Scan Ahead for Copy Job

This feature is effective for the Copy service.

Select whether or not to enable the Scan Ahead feature for copy jobs. Select from [Disabled] and [Enabled].

This feature is available for Card Activated - Cumulative, and Card Activated - Subtractive.

Important

- Some of the products listed above may not be available for this feature depending on the types and settings. For information on the products available for this feature and on how to change the settings, contact our Customer Support Center.

Authentication/Security Settings

In [Authentication/Security Settings], you can configure the registration and authentication of a user and security settings.

Reference

- For more information about the feature, refer to "Authentication and Accounting Features" (P.423).

The following shows the reference section for each setting.

"System Administrator Settings" (P.313)

"Authentication" (P.315)

"Allow User to Disable Active Settings" (P.324)

"Job Status Default" (P.324)

"Overwrite Hard Disk" (P.325)

1 On the [Tools] screen, select [Authentication/Security Settings].

Reference

- For the method of displaying the [Tools] screen, refer to "System Settings Procedure" (P.138).

2 Select an item to set or change.

System Administrator Settings

In [System Administrator Settings], you can set the system administrator ID and passcode.

We recommend setting the system administrator ID and passcode to prevent unauthorized setting changes and ensure security.

System Administrator's Login ID

Set the system administrator's user ID. Enter the ID from 1 to 32 single-byte characters.

Note

- The default of the system administrator's user ID is “11111”.

1 Select [System Administrator's Login ID].

2 Select [On].

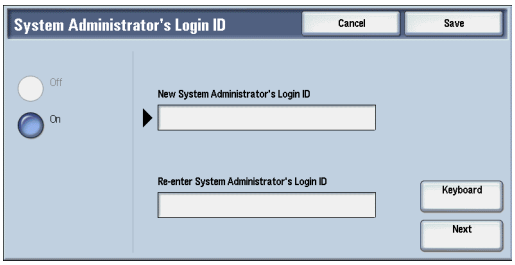

3 Select [Keyboard].

4 Enter the system administrator's ID with up to 32 characters, and then select [Save].

5 Repeat steps 3 and 4 to re-enter the same system administrator's ID in [Re-enter System Administrator's Login ID].

6 Select [Save].

7 A confirmation window appears. Select [Yes] to confirm your entry.

System Administrator's Passcode

Set the passcode for the System Administrator.

Setting a passcode is strongly recommended to enhance security.

Note

- The default of the system administrator's passcode is "x-admin".

The system administrator's passcode set here is used when [Passcode Entry for Control Panel Login] is set to [On] under [Authentication/Security Settings] > [Authentication] > [Passcode Policy].

Set the passcode after setting the system administrator's user ID. You can set the passcode from 4 to 12 characters.

Reference

- For more information about [Passcode Entry for Control Panel Login], refer to "Passcode Policy" (P.321).

1 Select [System Administrator's Passcode].

2 Select [New Passcode].

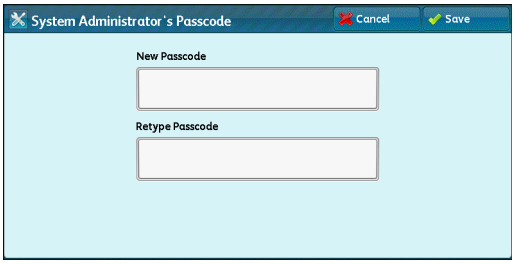

3 Enter a new passcode (4 to 12 digits) using the keyboard displayed, and then select [Save].

Note

- If no passcode is set, leave the text boxes blank and select [Save].

4 Select [Retype Passcode], enter the same passcode, and then select [Save].

5 Select [Save].

6 A confirmation window appears. Select [Yes] to confirm your entry.

Authentication

In [Authentication], you can set the following items.

The following shows the reference section for each setting.

"Login Type" (P.315)

"Access Control" (P.315)

"Create/View User Accounts" (P.317)

"Reset User Accounts" (P.317)

"Create Authorization Groups" (P.317)

"User Details Setup" (P.318)

"Maximum Login Attempts by System Administrator" (P.320)

"Passcode Policy" (P.321)

"Charge/Private Print Settings" (P.321)

"Receive Control" (P.322)

Login Type

Allows you to select a type of authentication.

■ No Login Required

Does not use the Authentication feature.

■ Login to Local Accounts

Authenticates users based on the user information registered on the machine.

Note

- When [Login to Local Accounts] is selected, the machine enters the Login mode and [Login] is displayed at the lower left of the Services Home screen.

■ Login to Remote Accounts

Authenticates users based on the user information registered on a remote authentication server.

Note

- When [Login to Remote Accounts] is selected, the machine enters the Login mode and [Login] is displayed at the lower left of the Services Home screen.

Access Control

Allows you to restrict access to the machine or each service. Once the access control is enabled, user authentication is required to use the machine or the services.

Note

- When a user is authenticated by a remote authentication server (except ApeosWare Authentication Management or ApeosWare Authentication Agent), the authenticated user can access the services through the control panel based on the permission information obtained from the remote server.
- When a guest user is permitted to use the machine, access restriction for each service cannot be specified for the guest user. If you want to restrict a guest user to use the machine, refer to "Guest User" (P.319).

■ Device Access

Allows you to set whether or not to restrict buttons operation on the control panel of the machine.

Select [Unlocked] or [Locked].

■ Service Access

Allows you to set whether or not to restrict access to each of the following services.

Note

- When [Locked (Show Icon)] is selected for a service, [ ] is displayed on the button of the applicable service on the Services Home screen. Also, [: Requires Login] is displayed at the lower left of the Services Home screen. [ ] and [: Requires Login] are not displayed after authentication.
- When [Locked (Hide Icon)] is selected for a service, the applicable service is not displayed on the Services Home screen. The services are displayed after authentication.

Reference

- For more information on how to set the login type, refer to "Login Type" (P.315).

- Copy

  Restricts access to the Copy service on the machine.

  If a stored programming contains steps to use the Copy service, the use of the store programming is also restricted.

- Fax/Internet Fax

  Restricts access to the Fax/IP Fax (SIP)/Internet Fax/Direct Fax service on the machine.

  If a stored programming contains steps to use the Fax/IP Fax (SIP)/Internet Fax service, the use of the store programming is also restricted.

- Scan

  Restricts access to the E-mail, Store to Folder, Scan to PC, Store to USB, Store & Send Link, Store to WSD, and Network Scanning services and features on the machine.

  If a stored programming contains steps to use the Scan services, the use of the store programming is also restricted.

Note

- WSD stands for Web Services on Devices.

- Media Print - Text

  Restricts access to the Media Print - Text service on the machine.

- Media Print - Photos

  Restricts access to the Media Print - Photos service on the machine.

- Send from Folder

  Restricts access to the Send from Folder service on the machine.

- Stored Programming

  Restricts access to the Stored Programming service on the machine.

- Job Flow Sheets

  Restricts access to the Job Flow Sheets service on the machine.

- Custom Services

  Restricts access to custom services on the machine.

Note

- This feature is available when any custom service is installed on the machine. For more information on the custom services, contact our Customer Support Center.

- Print

  Restricts users to print jobs stored on the machine, such as the Secure Print and Sample Set jobs.

This feature also restricts the submission of print jobs from a computer via a network. To use the Authentication feature, authentication information such as a user ID and passcode needs to be entered in a print driver.

If authentication fails, the print data sent to the machine is saved in the machine or deleted according to the Charge Print settings.

Note

- When [Authentication/Security Settings] > [Authentication] > [Login Type] is set to [Login to Remote Accounts], the Print feature is not restricted.

Reference

- For information on how to select an authentication type, refer to "Login Type" (P.315)

■ Feature Access

Set [Color Copying], [Print Files from Folder], and [Retrieve Files from Folder].

Create/View User Accounts

To enable the Accounting feature, register user IDs and user names to authenticate registered users.

You can set a limit on the number of pages for each user of the machine. You can also check the cumulative number of pages for each user registered. Up to 1,000 user data can be registered. The settings described here are identical with [Create/View User Accounts] under [Accounting].

Reference

- Refer to "Create/View User Accounts" (P.317).

Reset User Accounts

You can delete all registered information for all registered users in a single operation, or reset the auditron data. It is also available to print contents for confirmation before resetting. The settings described here are identical with [Reset User Accounts] under [Accounting].

Reference

- Refer to "Reset User Accounts" (P.317).

Create Authorization Groups

System administrators can give login users authority to use some features that are restricted for login users. The login users can be divided into different authorization groups.

Note

- Up to 20 groups can be registered.

1 Select [Create Authorization Groups].

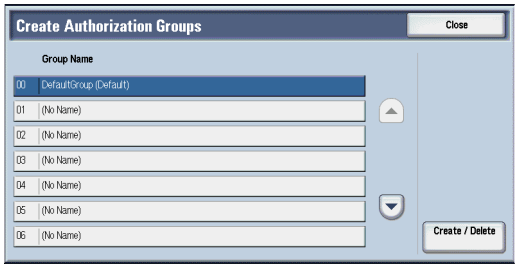

2 Select [Group Name], and then select [Create/Delete].

3 Select and set any item.

■ Group Name

Enter a group name with up to 32 single-byte characters.

■ Restrict Recipient Selection Method

When [Only From Address Book] is selected for [Restrict Recipient Selection Method] under [Tools] > [Common Service Settings] > [Other Settings], a transmission to a recipient who is not registered on the Address Book is restricted for the Fax / Internet Fax or E-mail Service. Set whether or not to cancel the restriction.

■ Restrict User to Edit Address Book

When [Yes] is selected for [Restrict User to Edit Address Book] under [Tools] > [Common Service Settings] > [Other Settings], local users cannot register / edit the Address Book. Set whether or not to cancel the restriction.

Note

- When [Only From Address Book] is selected for [Restrict Recipient Selection Method] under [Tools] > [Common Service Settings] > [Other Settings], shift the select [No Restriction] to enable the local users to register / edit the Address Book.

■ Allow User to Disable Active Settings

Select whether or not to permit the group members to temporarily disable the forcible printing features, such as the Force Watermark, Print Universal Unique ID, and Force Annotation features, and to allow the machine to process a job.

Note

- This feature does not appear for some models. An optional component is required. For more information, contact our Customer Support Center.

User Details Setup

Set the information required when carrying out authentication.

■ Alternative Name for User ID

If required, you can change the indication "UserID" on the [Login] screen that appears when the <Log In/Out> button on the control panel is pressed to another name such as "User Name" or "Number". The alias can be set to 1 to 15 single-byte characters.

Note

- The name changed is also printed in a report or a list.

■ Mask User ID (***)

You can set how an entered user ID is shown on the screen. Use this feature to enhance security as required.

When you select [Show], the characters you enter are echoed on the screen in the normal way as you enter the user ID. When you select [Hide], the characters you enter is hidden as a row of asterisks (*****) as you enter the user ID.

■ Failed Access Log

Set the failure count to detect unauthorized access. An error is logged if authentication fails the number of times specified here within a predetermined time (10 minutes).

■ Logout Confirmation Screen

Set whether or not to display a logout confirmation screen every time a user session ends.

■ User ID for Login

Set whether or not to make the user ID entry field on the user login screen case-sensitive.

When you select [Case Sensitive], authentication is performed using the User ID as registered (including upper and lower cases). When you select [Non-Case Sensitive], authentication is performed with case ignored even if the User ID has both upper and lower cases.

Important

- Do not change the setting while a file is stored for the Private Charge Print. Otherwise, you may encounter problems, such as being unable to print. Change the setting after the machine prints all the files stored.
- Do not select [Case Sensitive] when the machine stores User IDs such as "ABC" and "abc" which are regarded as the same ID under the setting. If you select [Case Sensitive], it may cause the problem and those IDs may not be displayed. Before you select the setting, correct those User IDs to distinguish them.

■ When Smart Card Reader is Connected

Set whether or not to enable user ID authentication when [Login to Local Accounts] is selected and the smart card reader is connected.

When [Smart Card Login] is selected, user ID authentication cannot be used. When [Smart Card or Control Panel Login] is selected, both smart card authentication and user ID authentication can be used.

■ Account Auto Setup for Card Login

Set whether or not to register new user information when [Login to Local Accounts] is selected and an unregistered user holds a card over the smart card reader.

When [Disabled] is selected, the machine does not register the user. When [Enabled] is selected, the machine registers the user automatically.

Note

- When [Enabled] is selected, [User Name], [Service Access], and [Add User To Authorization Group] will be displayed.
- Set the user name by selecting [User Name].
- When [Service Access] is selected, [Copy], [Fax], [Scan], and [Print] will be displayed. You can set [Feature Access] and [Change Account Limit] for each item.
- When [Add User To Authorization Group] is selected, you can select a user role and an authorization group for the user.
- When [Passcode Entry for Smart Card Login] under [Tools] > [Authentication/ Security Settings] > [Authentication] > [Passcode Policy] is set to [On], you need to enter the passcode twice for the auto assign.

■ Guest User

Set whether or not to permit a guest user when [Login to Remote Accounts] is selected. Set the guest user passcode from 4 to 12 digits.

Note

- Access restriction for each service cannot be specified for the guest user.

■ Use of Smart Card

Set whether or not to use smart card authentication.

■ Smart Card Link Mode

Set whether or not to require a passcode for smart card authentication when [Login to Remote Accounts] is selected.

■ Smart Card Certificate Verification

Set whether or not to verify the smart cart certificate when a user uses the smart card.

When [Enabled] is selected, the owner of the smart card is verified not only by PIN code verification but by certification verification of the smart card and private key match. In this case, the upper level CA certificate of the smart card certification must be registered on the machine.

When [Disabled] is selected, the owner of the smart card is verified by PIN code verification.

Note

- This item is displayed when the Extensible Customization Function is set to be enabled.

■ Kerberos Server Certificate Verification

Set whether or not to verify the Kerberos server certificate when a user uses the Kerberos server as a remote authentication server.

Note

- This item is displayed when the Extensible Customization Function is set to be enabled.

■ Smart Card Logout Timing

Select the logout method for smart card authentication when a contactless smart card is used for authentication.

When [Log Out when Card is Removed] is selected, you can logout from the machine by removing the smart card from the smart card reader. When [Log Out from Control Panel] is selected, you can logout by operating the touch screen or control panel.

■ Save remote accounts in this machine

Select whether or not to save the user information used for remote authentication. While the user information is saved in the machine, the machine can authenticate the user using the information saved in the machine even when the remote server is off.

Note

- This setting applies only to a user who is authenticated by smart cards.

■ Delete Remote Accounts

Select whether or not to delete the user information saved in the machine for remote authentication. Select from [Do Not Delete], [Weekly], and [Monthly].

For [Weekly], you can set the day and time. For [Monthly], set the date and time.

Note

- This setting applies only to a user who is authenticated by smart cards.

Maximum Login Attempts by System Administrator

This feature protects the settings from being changed by someone impersonating your system administrator. If authentication for a system administrator's ID fails more than specified times continuously, access is denied.

You can specify a login attempt count from 1 to 10.

Note

- The failure count is reset when the machine is restarted.
- To cancel the access rejection state, restart the machine by switching off and on the power.

Passcode Policy

■ Passcode Entry for Control Panel Login

You can set whether a passcode is required when the system administrator or a user uses the machine.Selecting [On] enables [System Administrator's Passcode] setting and [Passcode] setting for [Create/View User Accounts].

Selecting [Off] does not require the passcode, even if a passcode is set in the above settings.

Important

- The setting of [Passcode Entry for Control Panel Login] is used for authentication on the machine. A passcode must always be entered when accessing from remote devices using CentreWare Internet Services or the like, regardless of the use of passcode setting. Depending on authentication procedures, a passcode may be required for other processes as well.

Note

- The system administrator's passcode is also required when you change settings from CentreWare Internet Services.

■ Passcode Entry for Smart Card Login

You can set whether a passcode is required for smart card authentication when [Login to Local Accounts] is selected.

■ Minimum Passcode Length

Set this item when you specify the minimum number of digits allowed for a passcode.

Set a value from 4 to 12 in 1 digit increments.

Note

- This is only applicable to login users (not applicable to the system administrator and guests).
- Registered users can be authenticated with a passcode less than the minimum number of digits.

Charge/Private Print Settings

You can set how received print jobs should be handled.

You can directly print jobs and temporarily store print jobs to Charge Print or Private Charge Print for stored files.

The Charge Print feature prints the print jobs of authenticated users. But, using this feature, you can also temporarily store print jobs and print them later by operating the machine. If [Save as Charge Print Job] is selected, print jobs received are saved by a user ID for storage set in a print driver.

The Private Charge Print feature stores jobs to the machine, using the login User ID at print instruction. You can print the jobs later by operating the machine. Only the files of the login user are displayed on the touch screen, therefore, it can help ensure privacy protection as well as prevent output from being left in the tray.

Reference

- For more information on the Charge Print and Private Charge Print features, refer to "11 Job Status" > "Printing and Deleting Stored Jobs" and "Computer Operations" > "Print" in the User Guide.
- To use Charge Print or Private Charge Print, [Receive Control] must be set. For more information, refer to "Receive Control" (P.322).

Receive Control

You can set how received print jobs should be handled.

Reference

- For information about printing from a print driver, refer to "Computer Operations" in the User Guide.
- For information about printing or deleting the print job saved, refer to "Job Status" > "Printing and Deleting Stored Jobs" > "Private Charge Print" in the User Guide, and about deleting a Private Charge Print job with an invalid User ID, refer to "Deleting a Private Charge Print Job with an Invalid User ID" (P.108).

1. Select [Receive Control], and then select [Change Settings].
2. Select any item.

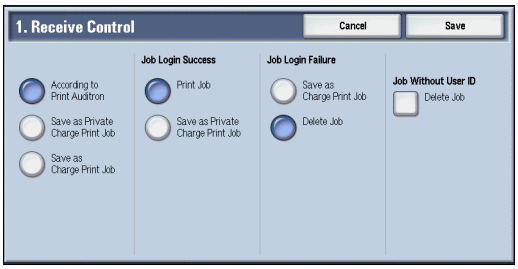

3. According to the selected item, set the processing to apply to jobs.
4. Select [Save] after the setting is completed.

■ According to Print Auditron

Specifies how print jobs should be handled when the Authentication and Accounting features are enabled and [Print] under [Service Access] is set to [Locked].

Note

- When the Authentication and Accounting features are disabled and [Print] under [Service Access] is set to [Unlocked], the settings specified in the print driver are applied.

When [According to Print Auditron] is selected, [Job Login Success], [Job Login Failure], and [Job without User ID] are displayed.

◆ Job Login Success

Set the processing to apply to successfully authenticated jobs.

- To print jobs, select [Print Job].
- To save jobs as Private Charge Print, select [Save as Private Charge Print Job]

Note

- When [Save as Private Charge Print Job] is selected, the Secure Print, Sample Set, Store in Remote Folder, and Delayed Print settings specified in the print driver will be ignored.

◆ Job Login Failure

Set the processing to apply to jobs authentication failed (whose information such as the user ID and passcode has been incorrectly registered on the print driver).

- To save jobs as Private Charge Print, select [Save as Charge Print Job].
- To delete jobs, select [Delete Job].

◆ Job without User ID

Set the processing to apply to jobs with no authentication user ID attached (such as print jobs sent from CentreWare Internet Services or e-mail print).

- To print jobs, select [Print Job].
- To save jobs as Charge Print, select [Save as Charge Print Job].
- To delete jobs, select [Delete Job].

Note

- [Job without User ID] is automatically changed to [Print Job] on the machine when you select as follows on CentreWare Internet Services: [Properties] > [Security] > [Authentication Configuration] > [Non-Account Print]. When [Job without User ID] is set to [Save as ChargePrint Job] or [Delete Job], the [Non-account Print] check box on CentreWare Internet Services is deselected automatically.

■ Save as Private Charge Print Job

Regardless of whether the Authentication feature is being used or not, all jobs that have a user ID are saved as Private Charge Print. You can also specify how to handle the job that does not have a User ID or a PJL command.

Important

- When [Save as Private Charge Print Job] is selected, all the print jobs that have User IDs are saved regardless of whether or not being successfully authenticated. To minimize the unnecessary print jobs, specify an expiration date, so that they can be automatically deleted after a specified period of time. Or the system administrator can manually delete them. For details on how to specify an expiration date, refer to "Stored File Settings" (P.271). For details on how to delete the print jobs manually, refer to "Deleting a Private Charge Print Job with an Invalid User ID" (P.108).

Note

- When [Save as Private Charge Print Job] is selected, the Secure Print, Sample Set, Store in Remote Folder, and Delayed Print settings specified in the print driver will be ignored.

When [Save as Private Charge Print Job] is selected, [Job without User ID] and [Non-PJL Command Job(s)] are displayed.

◆ Job without User ID

Set how to process jobs with no user ID attached.

- To print jobs, select [Print Job].
- To save jobs as Charge Print, select [Save as Charge Print Job].
- To delete jobs, select [Delete Job].

Note

- [Job without User ID] is automatically changed to [Print Job] on the machine when you selectas follows on CentreWare Internet Services: [Properties] > [Security] > [AuthenticationConfiguration] > [Non-Account Print]. When [Job without User ID] is set to [Save as ChargePrint Job] or [Delete Job], the [Non-account Print] check box on CentreWare InternetServices is deselected automatically.

◆ Non-PJL Command Job(s)

Set how to handle the job that does not have a PJL command. The job will be distinguished by the existence of the User ID, and will be handled according to the following settings.

Select [Do Not Use At All] to apply the [Job without User ID] setting regardless of whether the job has a User ID.

Select [Use When Available] to specify how to handle the job that has a User ID.

- To print jobs, select [Print Job].
- To save jobs as Charge Print, select [Save as Charge Print Job].
- To save jobs as Private Charge Print, select [Save as Private Charge Print Job].
- To delete jobs, select [Delete Job].

■ Save as Charge Print Job

Regardless of whether the Authentication feature is being used or not, all received jobs are saved as Charge Print.

Important

- When using [Save as Charge Print Job], all the print jobs are saved regardless of whether or not being successfully authenticated. To minimize the unnecessary print jobs, specify an expiration date, so that they can be automatically deleted after a specified period of time. Or the system administrator can manually delete them. For details on how to specify an expiration date, refer to "Stored File Settings" (P.271). For details on how to delete the print jobs manually, refer to "Job Status" > "Printing and Deleting Stored Jobs" > "Charge Print" in the User Guide.

Note

- When [Save as Charge Print Job] is selected, the Secure Print, Sample Set, Store in Remote Folder, and Delayed Print settings specified in the print driver will be ignored.

Allow User to Disable Active Settings

Use this feature when you want use active settings for most jobs but not for specific jobs.

You can temporarily disable active settings such as Force Watermark, Print Universal Unique ID, and Force Annotation features that have been enabled

This feature is applicable to Copy, Print from Folder, Print Stored File, Media Print - Text, and Media Print - Photos jobs when [Enable Active Settings] is selected (for jobs such as Fax, Client Print, and Report, you cannot disable active settings).

This option is displayed when [Enable Active Settings] is selected for [Allow User to Disable Active Settings] for the authorization group where the login user belongs.

Note

- If this setting is set to [Enable Active Settings] while a job is in progress, the setting is not effective for the job.
- You can disable active settings even when you select a file in a folder using the Job Flow feature and manually execute a job.
- Users with system administrator role can configure this feature regardless of authorization group.
- The Watermark feature specified by user using TrustMarkingBasic (sold separately) or copy are not disabled.

Reference

- For more information about Force Watermark, refer to "Watermark" (P.170).
- For settings of authorization group, refer to "Authentication and Accounting Features" (P.423).

Job Status Default

You can hide active jobs, completed jobs, and job logs from unauthenticated users or non-job owners, to protect privacy and prevent leakage of confidential information.

Note

- If you set to hide job details, you cannot stop or delete jobs you instructed. Therefore, you cannot cancel jobs in the case of operational error of copies or wrong transmission of faxes.

Active Jobs View

Select whether or not to hide active jobs from local users.

Completed Jobs View

Select from [All Job Viewing at All Times], [Require Login to View Jobs], and [No Job Viewing].

■ Access To

This feature is displayed when [Require Login to View Jobs] is selected.

Select either [All Jobs] or [Jobs Run By Login User Only].

■ Hide Job Details

This feature is displayed when [Allow Job Viewing at All Times] or [Require Login to View Jobs] is selected.

Select either [No] or [Yes].

Overwrite Hard Disk

Select whether or not to conduct hard disk overwriting.

When copy, fax, scan, or print processing is completed, the data is deleted from the hard disk and the area on which the deleted data was stored is automatically overwritten with blank data. This feature prevents unauthorized retrieval or restoration of the data recorded on the hard disk. It also applies to copy document and other information stored temporarily by the system. The following option can be configured.

Note

- This feature may not be available depending on the model or your machine configuration. For information, contact out Customer Support Center.

Number of Overwrites

You can set the number of overwrites.

Important

- If the machine is turned off during the overwriting, unfinished files may remain on the harddisk. The overwriting will resume if you turn the machine on again with the unfinished files remaining on the hard disk.
- Overwriting once erases the data, but overwriting three times makes it even more definite that the data cannot be restored. It does, however, take longer.
- During overwriting, normal operations may be slowed down.

Note

- An optional component is required to use this feature. For more information, contact our Customer Support Center.

Reference

- For more information on how to check the status during overwriting, refer to "Overwrite Hard Disk" (P.325).

Prerequisite for Using the Data Security Kit

The system administrator must follow the instructions below:

- To protect the data deleted from or stored on the hard disk, the following settings are required:
  - Number of Overwrites: [1 Overwrite] or [3 Overwrites]
  - Data Encryption: [On]: an encryption key of 12 digits
  - Service Representative Restricted Operation: [Yes]
- Change the system administrator’s factory default passcode (x-admin). Register a new passcode of 7 characters or more (maximum 12 characters). Be careful not to register a passcode that can be easily assumed and not to store the registered passcode on a location that is easily accessible to other persons.

Important

- If the system administrator's user ID and passcode are forgotten, the machine configuration will not be able to recover in case of malfunction.

- Set [Passcode Entry for Control Panel Login] to [On].
- Set [Maximum Login Attempts by System Administrator] to 5 times.
- Note that the hard disk security will not be warranted if you do not correctly follow the above setting instructions.

Reference

- For more information on how to set data encryption, refer to "Data Indicator" (P.181).
- For more information on how to set service representative restricted operation, refer to "Service Rep. Restricted Operation" (P.179).
- For more information on how to set [Passcode Entry for Control Panel Login], refer to "Passcode Policy" (P.321).
- For more information on how to set the system administrator's user ID, refer to "System Administrator's Login ID" (P.313).

The manager (of the organization that this machine is used for) must follow the instructions below:

- Assign an appropriate person as a system administrator and manage and train the person properly.
- When turning off the machine, make sure no operation is running. Train the users to turn off the machine after an active operation completes, if any.
- Note that the Data Security Kit is used to protect deleted document data from being recovered; it does not protect files stored in folders in the hard disk.
- Install an anti-bugging device on the internal network that the machine with the Data Security Kit is located on, and perform the network settings properly to protect the machine from interceptions.
- To block unauthorized access, install a firewall device between the external network and the internal network that the machine is located on.
- Set the passcode and encryption key according to the following rules:
  - Do not use easily assured character string
  - Use both characters and numerics

Reference

- For more information on encryption key, refer to "Encryption Key for Confidential Data" (P.179).

6

CentreWare Internet Services Settings

Installation of CentreWare Internet Services

CentreWare Internet Services provides services such as displaying the status of the machine and jobs, and altering configurations using a web browser in a TCP/IP environment.

Preparations

Prepare a computer supporting the TCP/IP protocol and a Web browser such as Internet Explorer® or Safari to use CentreWare Internet Services.

Reference

- Refer to "CentreWare Internet Services Problems" (P.488) when any troubles occur during the configuration.

Configuration on the Machine

The following describes the configuration procedure for using CentreWare Internet Services on the machine.

1 Display the [Tools] screen.

1) Press the <Log In/Out> button.

2) Enter the system administrator's user ID with the numeric keypad or the keyboard displayed on the screen, and select [Enter]. When a passcode is required, select [Next] and enter the system administrator's passcode, and then select [Enter].

Note

- The default user ID is "11111".
- The default passcode is "x-admin".

3) Select [Tools] on the Services Home screen.

2 Enable the Internet Services (HTTP) port on the machine.

1) Select [Connectivity & Network Setup].

2) Select [Port Settings].

3) Select [Internet Services (HTTP)], and then select [Change Settings].

4) Select [Port Status], and then select [Change Settings].

5) Select [Enabled], and then select [Save].

6) Select [Close] repeatedly until the [Tools] screen is displayed.

3 Set an IP address.

If an IP address is already set, you can skip this step. For an environment with DHCP or BOOTP, configure the method for obtaining the address. If an IP address cannot be obtained automatically or manual configuration is preferred, confirm the settings of an IP address, a subnet mask, and a gateway address.

Reference

- For information on how to set an IP address, refer to "Protocol Settings" (P.200).

4 Select [Close] repeatedly until the [Tools] screen appears.

5 Select [Close].

Note

- Rebooting the machine may be required depending on the settings. When a message displayed on the screen, follow the message and reboot the machine.

6 After the machine reboots, you can print out a configuration report to confirm that the port for CentreWare Internet Services is enabled and TCP/IP is set up correctly.

Reference

- For information on how to print a configuration report, refer to "Print Reports" (P.115).

7 Start CentreWare Internet Services to confirm whether the service is available or not.

Reference

- For information on how to start CentreWare Internet Services, refer to "Starting CentreWare Internet Services" (P.330).

Starting CentreWare Internet Services

To use CentreWare Internet Services, perform the following procedure on your computer.

When Login Type is selected on the machine, authentication is required to access the machine via a web browser.

1 Start a web browser.

2 Enter the machine's IP address or the Internet address in the address box on the web browser, and press the <Enter> key.

- Example of the IP address entry

  http://192.0.2.1/ (IPv4)

  http://[2001:DB8::1234] (IPv6)

- Example of the Internet address entry (when the machine's Internet address is myhost.example.com)

  http://myhost.example.com/

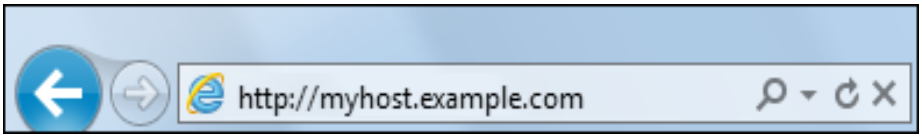

Note

- If your network uses DNS (Domain Name System) and the machine's host name is registered on the domain name server, you can access the machine using the Internet address combining the host name and the domain name. For example, if the host name is "myhost", and the domain name is "example.com" then the Internet address is "myhost.example.com".
- When specifying a port number, add ":" and the port number after the Internet address.
- If using the Authentication feature on the machine, enter a user ID and passcode in the [User Name] and [Password] fields. If you are not sure about the user ID and passcode, consult your system administrator. The features you can operate vary depending on the system administrator's authority that was given to a user.
- If communications are encrypted; when the [Enabled] check box is selected under [Security] > [SSL/TLS Settings] > [HTTP-SSL/TLS Communication] on the [Properties] tab, you must specify an address that starts with "https" instead of "http" to access CentreWare Internet Services.

  Example of the IP address entry
  https://192.0.2.1/ (IPv4)
  https://[2001:DB8::1234] (IPv6)
  Example of the Internet address entry
  https://myhost.example.com/

Reference

- If CentreWare Internet Services is not displayed, refer to ""CentreWare Internet Services Problems" (P.488).

Configuring Machine Settings Using CentreWare Internet Services

CentreWare Internet Services enables you to change various settings on the machine from a computer.

Note

- Confirm that the port in use is enabled in [Properties] tab > [Connectivity] > [Port Settings] of CentreWare Internet Services when an item that you want to set is not displayed.
- You cannot change settings from CentreWare Internet Services while Smart WelcomEyes is detecting human presence or the control panel is being used. You can change settings after the machine resets the settings automatically (Auto Clear). For information about Auto Clear, refer to "Auto Clear" (P.148).
- You may be prompted to enter your user name and passcode when you attempt to change settings on CentreWare Internet Services. In that case, enter the system administrator's user ID and passcode into the [User Name] and [Password] fields. The default user ID is "11111" and passcode is "x-admin".

You can configure the following settings with CentreWare Internet Services:

Note

- For details on the setting items, click [Help] at the upper right corner of the CentreWare Internet Services screen to see help.

Important

- To display the online help for CentreWare Internet Services, users need to have the environment to connect to the internet. The communication fee shall be borne by you.

Item	How to Select	Overview/Reference
Usage Counters	Select from [Status] tab > [Counters]	Displays the total number of pages printed for each service.
Total Runtime	Select from [Status] tab	Displays the cumulative time of runtime (printing or scanning), standby time, Sleep mode time, warm-up time, and power-off time of the machine by minutes.
Job Templates	Select from [Scan] tab	Allows you to create, edit, copy, or delete job templates.
Folder		Refer to "Create Folder" (P.276).
Job Flow Sheets		Refer to "Create Job Flow Sheet" (P.279).
Add New Name	Select from [Address Book] tab	Refer to "Add Address Book Entry" (P.289).
Job Management	Select from [Properties] tab > [General Setup]	Allows you to configure the delete method of jobs.
Paper Tray Attributes		Refer to "Changing the Paper Settings" (P.72).
Paper Settings		Refer to "Changing the Paper Settings" (P.72).
Power Saver Settings		Refer to "Changing the Interval for Entering Power Saver Mode" (P.23).
Stored Job Settings		Refer to "Stored File Settings" (P.271).
Memory Settings		Refer to "Allocate Memory" (P.227).
Web Browser Setup		Refer to "Web Browser Setup" (P.145).

Item	How to Select	Overview/Reference
InternetServices Settings	Select from [Properties] tab > [General Setup]	Allows you to configure the auto refresh interval and the display language of the CentreWare Internet Services settings.
Cloning		Allows you to save the settings of the machine in a file, and copy the file to the other machine of the same model but not to the other models.
Notify Job Completion by E-mail	Select from [Properties] tab > [General Setup] > [Alert Notification]	Refer to "Notify Job Completion by E-mail" (P.174).
E-mail Notification for Machine Status		Allows you to configure the recipient of the notification and a status of which to be notified.
Port Settings	Select from[Properties] tab >[Connectivity]	Refer to "Port Settings" (P.194).
Physical Connections		Refer to "Port Settings" (P.194).
Protocols		Refer to "Protocol Settings" (P.200).
Language Emulations	Select from [Properties] tab > [Services] > [Printing]	Refer to Print Mode(P.127).
Scan Service - Common Settings	Select from [Properties] tab > [Services]	Allows you to specify the file name when sending or storing the scanned document.
E-mail		Refer to "E-mail/Internet Fax Service Settings" (P.144).
Internet Fax		Refer to "E-mail/Internet Fax Service Settings" (P.144).
Fax		Refer to "Fax Service Settings" (P.245).
Network Scanning		Refer to "Configuration of Network Scanning (Job Template Scanning)" (P.373).
Scan to My Folder		Refer to "Configuration of Scan to My Folder" (P.367).
Scan to PC		Refer to "Configuration of Scan to PC" (P.364).
Store & Send Link		Refer to "Configuration of Store & Send Link" (P.377).
Store to USB		Refer to "Configuration of Store to USB" (P.372).
Custom Services		Allows you to configure the Validation Options settings. Sends the user name with the validation request if the user is authenticated on the machine.
Media Print		Allows you to enable and disable the Media Print - Text and Media Print -Photos services.
USB		Allows you to enable and disable Store to USB, Media Print - Text and Media Print - Photos settings.

Item	How to Select	Overview/Reference
EP Service	Select from [Properties] tab > [Services	Configures the EP system with an active Internet connection. For details about EP Service, contact our Customer Support Center or Sales Agency.
Accounting	Select from [Properties] tab	Refer to "Accounting" (P.145).
Authentication Configuration	Select from [Properties] tab > [Security]	Refer to "Authentication" (P.315).
User Details Setup		Refer to "User Details Setup" (P.318).
Create AuthorizationGroups		Refer to "Create Authorization Groups" (P.317).
Remote Authentication Servers		Refer to "Remote Authentication/Directory Service" (P.214).
IP Filtering		Allows you to configure the IPs to permit access, for IPv4 and IPv6 respectively.
Unbounded Port		Allows you to set unbounded portnumbers.
Audit Log		Allows you to enable the Audit Logfeature that logs the operation on the machine, and retrieve the audit log.
Machine Digital Certificate Management		Allows you to create a self-signed certificate and import a certificate to the machine.
IPsec		Refer to "Configuration of Encryption using IPsec" (P.413).
Certificate Management		Displays the certificates registered on the machine. Also allows you to select, delete, and export of the certificate.
Certificate RevocationRetrieval Settings		Refer to "Certificate Revocation Retrieval Settings" (P.225).
IEEE 802.1		Refer to "IEEE 802.1X Settings / IEEE 802.1X Settings (Ethernet 1), IEEE 802.1X Settings (Ethernet 2)" (P.224).
SSL/TLS Settings		Refer to "SSL/TLS Settings" (P.220).
S/MIME Settings		Refer to S/MIME Settings(P.221).
PDF/DocuWorks/ XPS*Signature Settings		Refer to PDF/DocuWorks/XPS Signature Settings(P.222).
Watermark		Refer to "Watermark" (P.170).
Force Annotation		Refer to "Force Annotation" (P.172).
Job Status Default		Allows you to configure the display/hide settings for completed and active jobs.
Plug-in/Custom Services Settings		Refer to "Plug-in Settings" (P.175).
On Demand Overwrite		Refer to "Overwrite Hard Disk" (P.325).
Service Representative Restricted Operation		Allows you to restrict the operation of service representatives. Prevents the machine from being altered by someone impersonating our service representative.

Item	How to Select	Overview/Reference
System Administrator Settings	Select from [Properties] tab > [Security]	Refer to "System Administrator Settings" (P.313).
Smart Card Settings		Allows you to configure the smart card settings and backup the settings.

* : XPS stands for XML Paper Specification.

7

Printer Environment Settings

Print Overview

This machine can be set up as a local printer by directly connecting the machine to a computer using a USB interface cable. Similarly, it can be set up as a network printer by connecting the machine to a network.

Enable the necessary port using the control panel or CentreWare Internet Services.

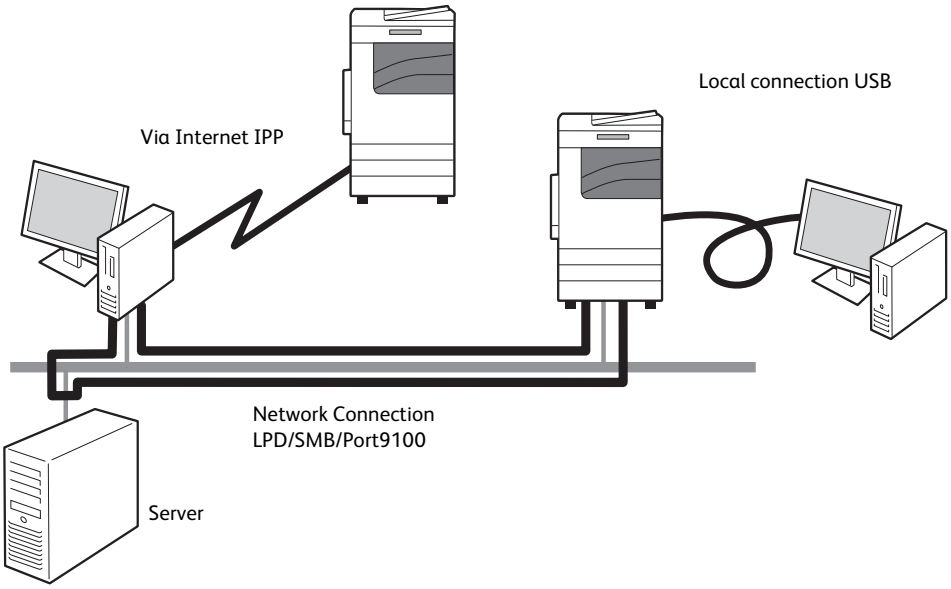

Note

- This feature does not appear for some models. For such models, an optional component is required. For more information, contact our Customer Support Center.
- The print drivers are contained in the Media (Software/Product Manual). For information on the driver installation procedures, refer to the manual contained in the Media (Software/Product Manual).
- You can download the latest print driver from our web site.

Using the Machine as a Local Printer

■ USB

Use a USB interface cable to directly connect the machine to a computer.

Reference

- For more information on how to set up the machine using USB connection, refer to "Installation When Using USB Port" (P.338).

Using the Machine as a Network Printer

To set up the machine as a network printer, the following protocols are available to connect the machine.

■ LPD

Use LPD when direct communication between the machine and a computer via TCP/IP is available.

Reference

- For more information on how to set up the machine using LPD, refer to "Installation When Using TCP/IP (LPD/Port 9100)" (P.341).

■ IPP

Use IPP to print via the Internet.

Reference

- For more information on how to set up the machine using IPP, refer to "Installation When Using Internet Printing Protocol (IPP)" (P.345).

■ Port 9100

Use Port9100 when the machine uses Port9100.

Reference

- For more information on how to set up the machine using Port 9100, refer to "Installation When Using TCP/IP (LPD/Port 9100)" (P.341).

Supported Operating Systems

Connectionmethod		Localconnection	Network connection				
Port		USB 2.0*1	LPD	IPP	Port 9100	WSD*2	Bonjour
Protocol		-	TCP/IP	TCP/IP	TCP/IP	WSD*2	Bonjour
OS	Windows Server 2003	O	O	O	O		
	Windows Server 2008	O	O	O	O		
	Windows Server 2012	O	O	O	O	O	
	Windows Server 2012 R2	O	O	O	O	O	
	Windows Vista	O	O	O	O	O	
	Windows 7	O	O	O	O	O	
	Windows 8	O	O	O	O	O	
	Windows 8.1	O	O	O	O	O	
	UNIX		O*3				
	Mac OS	O	O		O		O

O: Available
Blank: Not available

*1 : A USB 2.0 port is required on a computer to connect.
*2 : WSD stands for Web Services on Devices.
*3 : The Adobe PostScript 3 Kit (optional) and a Unix filter are required to print PostScript data.

Note

- The print driver supplied with the Adobe PostScript 3 Kit (optional) supports only English operating systems.

Reference

- For information on network environments, refer to the manual contained in the Media (Software/Product Manual).

Installation When Using USB Port

This section describes how to install the machine using a USB interface.

The following shows the reference section for each procedure.

"Step 1 Preparations" (P.338)

"Step 2 Configuration on the Machine" (P.338)

"Step 3 Configuration on the Computer" (P.339)

"CentreWare Internet Services Setting Items" (P.339)

Step 1 Preparations

The following items are required to connect the machine to a computer via a USBinterface.

- USB cable
- Media (Software/Product Manual) provided with the machine

Step 2 Configuration on the Machine

The following describes the configuration procedures to use a USB interface on the machine.

Note

- To print binary data using a USB interface, set [Adobe Communication Protocol] to [RAW]. For more information, refer to "USB" (P.195).
- You can configure the settings using CentreWare Internet Services. For items that can be configured using CentreWare Internet Services, refer to "CentreWare Internet Services Setting Items" (P.339).

1 Display the [Tools] screen.

1) Press the <Log In/Out> button.

2) Enter the system administrator's user ID with the numeric keypad or the keyboard displayed on the screen, and select [Enter].

When a passcode is required, select [Next] and enter the system administrator's passcode, and select [Enter].

Note

- The default user ID is "11111".
- The default passcode is "x-admin".

3) Select [Tools] on the Services Home screen.

2 Enable the USB port on the machine.

1) Select [Connectivity & Network Setup].

2) Select [Port Settings].

3) Select [USB], and then select [Change Settings].

4) Select [Port Status], and then select [Change Settings].

5) Select [Enabled], and then select [Save].

3 Configure [Print Mode] or [Auto Eject Time] as necessary.

Reference

- For information on the setting items, refer to "USB" (P.195).

4 Select [Close] repeatedly until the [Tools] screen is displayed.

5 Select [Close].

Note

- Rebooting the machine may be required depending on the settings. When a message displayed on the screen, follow the message and reboot the machine.

6 Print a configuration report to confirm that the USB port is enabled.

Reference

- For information on how to print a configuration report, refer to Printer Reports(P.117).

Step 3 Configuration on the Computer

To print from the machine, you need to install a print driver on your computer.

Reference

- For information on the supported operating systems, refer to "Supported Operating Systems" (P.337).

Note

- For Mac OS X 10.5/10.6, Mac OS X 10.7 Lion, and OS X 10.8 Mountain Lion, OS X 10.9 Mavericks and OS X 10.10 Yosemite, you can use USB without the Adobe PostScript 3 Kit (optional) if you install the print driver for Mac OS X contained in the media provided with the driver.
- For information on the installation procedures of Adobe PostScript 3 Kit (optional), refer to the manual contained in the CD-ROM provided with the Adobe PostScript 3 Kit (optional).

CentreWare Internet Services Setting Items

You can configure the following setting items using CentreWare Internet Services:

Reference

- For details on the setting items, click [Help] at the upper right corner of the CentreWare Internet Services screen to see help.

Important

- To display the online help for CentreWare Internet Services, users need to have the environment to connect to the internet. The communication fee shall be borne by you.

Reference

- For information on how to start CentreWare Internet Services, refer to "Starting CentreWare Internet Services" (P.330).

- Receiving buffer size for the USB interface

  ([Properties] > [General Setup] > [Memory Settings] > [USB])
- Port Settings
- Bi-directional Communication
- Auto Eject Time
- Adobe Communication Protocol

Note

- The Adobe Communication Protocol can be configured when the Adobe PostScript 3 Kit (optional) is installed.

- PostScript Wait Timeout

Note

- The PostScript Wait Timeout can be configured when the Adobe PostScript 3 Kit (optional) is installed.

Installation When Using TCP/IP (LPD/Port 9100)

The following shows the reference section for each procedure.

"Step 1 Preparations" (P.341)

"Step 2 Configuration on the Machine" (P.341)

"Step 3 Configuration on the Computer" (P.342)

"CentreWare Internet Services Setting Items" (P.343)

Step 1 Preparations

The following items are required to use the machine via TCP/IP (LPD/Port 9100).

- TCP/IP network environment
- Media (Software/Product Manual) (provided with the machine)

Step 2 Configuration on the Machine

The following describes the configuration procedures to use TCP/IP (LPD/Port 9100) on the machine. Enable the LPD Port or the Port 9100 port, and then configure TCP/IP settings.

Note

- You can configure the settings using CentreWare Internet Services or the Media (Software/Product Manual).

Reference

- For the items that can be configured using CentreWare Internet Services, refer to "CentreWare Internet Services Setting Items" (P.343). For information on how to configure the setting using the Media (Software/Product Manual), refer to the manual contained in the Media (Software/Product Manual).

1 Display the [Tools] screen.

1) Press the <Log In/Out> button.

2) Enter the system administrator's user ID with the numeric keypad or the keyboard displayed on the screen, and select [Enter].

When a passcode is required, select [Next] and enter the system administrator's passcode, and select [Enter].

Note

- The default user ID is "11111".
- The default passcode is "x-admin".

3) Select [Tools] on the Services Home screen.

2 Enable the LPD port or Port 9100 port as appropriate.

In this example, the LPD port is enabled.

1) Select [Connectivity & Network Setup].

2) Select [Port Settings].

3) Select [LPD], and then select [Change Settings].

4) Select [Port Status], and then select [Change Settings].

5) Select [Enabled], and then select [Save].

6) Select [Close] repeatedly until the [Tools] screen is displayed.

3 Set an IP address and the other addresses.

Skip this step if an IP address is already set.

If DHCP or BOOTP is available in your environment, configure the method for obtaining the address. The configuration of an IP address, a subnet mask, and a gateway address is not required.

Reference

- For information on how to set an IP address, refer to "Protocol Settings" (P.200).

4 If the operating system on the client is Mac OS X 10.6 or later, enable the Bonjour port, and the Discovery feature that automatically detects printers on the IP network can be enabled.

Note

- To print from a printer detected by Bonjour, the LPD port must be enabled in advance.

1) Select [Connectivity & Network Setup].

2) Select [Port Settings].

3) Select [Bonjour], and then select [Change Settings].

4) Select [Port Status], and then select [Change Settings].

5) Select [Enabled], and then select [Save].

5 Select [Close] repeatedly until the [Tools] screen is displayed.

6 Select [Close].

Note

- Rebooting the machine may be required depending on the settings. When a message displayed on the screen, follow the message and reboot the machine.

7 Print a configuration report to confirm that the LPD port is enabled and that TCP/IP is set up correctly.

Reference

- For information on how to print a configuration report, refer to "Print Reports" (P.115).

8 Configure other LPD or Port 9100 settings as necessary.

Reference

- For information on how to set up the LPD port or Port 9100, refer to "CentreWare Internet Services Setting Items" (P.343).

Step 3 Configuration on the Computer

To print from the machine, you need to install a print driver on your computer.

Reference

- For information on the supported operating systems, refer to Supported Operating Systems(P.337).
- For information on the driver installation procedures, refer to the manual contained in the Media (Software/Product Manual).
- You can print via TCP/IP (LPD) from a Macintosh computer for Mac OS X 10.5/10.6, Mac OS X 10.7 Lion, OS X 10.8 Mountain Lion, OS X 10.9 Mavericks, and OS X 10.10 Yosemite. For information on the installation procedures of the print driver for Mac OS X, refer to the manual contained in the Media provided with the driver.

CentreWare Internet Services Setting Items

You can configure the following setting items using CentreWare Internet Services:

Reference

- For details on the setting items, click [Help] at the upper right corner of the CentreWare Internet Services screen to see help.

Important

- To display the online help for CentreWare Internet Services, users need to have the environment to connect to the internet. The communication fee shall be borne by you.

Reference

- For information on how to start CentreWare Internet Services, refer to "Starting CentreWare Internet Services" (P.330).

- Spool Destination for Jobs

  ([Properties] > [General Setup] > [Memory Settings] > [LPD])

Note

- The spool destination can be configured when the LPD port is enabled.

- Receiving buffer size for Port 9100

  ([Properties] > [General Setup] > [Memory Settings] > [Port 9100])

- Port Settings
- IP Mode
- Host Name
- IPv4
  - IP Address Resolution
  - Port Settings
  - IP Address
  - Subnet Mask
  - Gateway Address
- IPv6
  - Enable Manual Address
  - IP Address
  - Link-Local Address
  - Gateway Address
- Domain Name
- DNS Configuration
  - IPv4
  - IPv6
- DHCP/DDNS
- WINS Server
- Port Number
- TBCP Filter

Note

- The TBCP filter can be configured when the Adobe PostScript 3 Kit (optional) is installed.

- Connection Time-Out
- Maximum Number of Sessions

Note

- The Maximum Number of Sessions can be configured when the LPD port is enabled.

- TCP-MSS Mode
- IPv4 Subnet Mask when TCP-MSS Mode is enabled
- IP Filtering
  - IPv4 Filtering
  - IPv6 Filtering

Installation When Using Internet Printing Protocol (IPP)

This section describes how to install the machine using Internet Printing Protocol (IPP).

The following shows the reference section for each procedure.

"Step 1 Preparations" (P.345)

"Step 2 Configuration on the Machine" (P.345)

"Step 3 Configuration on the Computer" (P.346)

"CentreWare Internet Services Setting Items" (P.347)

Note

- If the size of print data sent via IPP is larger than the value set in the proxy server, the machine cannot receive the data. In this case, set a larger value in the proxy server or change your browser setting not to use the proxy server.

Step 1 Preparations

The following items are required to set up the machine to use Internet Printing Protocol (IPP).

- TCP/IP network environment
- Media (Software/Product Manual) provided with the machine

Step 2 Configuration on the Machine

The following describes the configuration procedures to use Internet Printing Protocol (IPP) on the machine. Enable the IPP port, and then configure TCP/IP settings.

Note

- You can configure the settings using CentreWare Internet Services or the Media (Software/Product Manual).

Reference

- For the items that can be configured using CentreWare Internet Services, refer to "CentreWare Internet Services Setting Items" (P.347). For information on how to configure the setting using the Media (Software/Product Manual), refer to the manual contained in the Media (Software/Product Manual).

1 Display the [Tools] screen.

1) Press the <Log In/Out> button.

2) Enter the system administrator's user ID with the numeric keypad or the keyboard displayed on the screen, and select [Enter].

When a passcode is required, select [Next] and enter the system administrator's passcode, and select [Enter].

Note

- The default user ID is "11111".
- The default passcode is "x-admin".

3) Select [Tools] on the Services Home screen.

2 Enable the IPP port.

1) Select [Connectivity & Network Setup].

2) Select [Port Settings].

3) Select [IPP], and then select [Change Settings].

4) Select [Port Status], and then select [Change Settings].

5) Select [Enabled], and then select [Save].

6) Select [Close] repeatedly until the [Tools] screen is displayed.

3 Set an IP address and the other addresses.

Skip this step if an IP address is already set.

If DHCP or BOOTP is available in your environment, configure the method for obtaining the address. The configuration of an IP address, a subnet mask, and a gateway address is not required.

Reference

- For information on how to set an IP address, refer to "Protocol Settings" (P.200).

4 Select [Close] repeatedly until the [Tools] screen is displayed.

5 Select [Close].

Note

- Rebooting the machine may be required depending on the settings. When a message displayed on the screen, follow the message and reboot the machine.

6 Print a configuration report to confirm that the IPP port is enabled and that TCP/IP is set up correctly.

Reference

- For information on how to print a configuration report, refer to "Print Reports" (P.115).

7 Configure other IPP settings as necessary.

Reference

- Refer to "CentreWare Internet Services Setting Items" (P.347).

Step 3 Configuration on the Computer

To print from the machine, you need to install a print driver on your computer.

Reference

- For information on the supported operating systems, refer to Supported Operating Systems(P.337).
- For information on the driver installation procedures, refer to the manual contained in the Media (Software/Product Manual).

CentreWare Internet Services Setting Items

You can configure the following setting items using CentreWare Internet Services:

Reference

- For details on the setting items, click [Help] at the upper right corner of the CentreWare Internet Services screen to see help.

Important

- To display the online help for CentreWare Internet Services, users need to have the environment to connect to the internet. The communication fee shall be borne by you.

Reference

- For information on how to start CentreWare Internet Services, refer to "Starting CentreWare Internet Services" (P.330).

- Spool Destination for Jobs

  ([Properties] > [General Setup] > [Memory Settings] > [IPP])
- Port Settings
- Add Port Number
- TBCP Filter

Note

- The TBCP filter can be configured when the Adobe PostScript 3 Kit (optional) is installed.

- Administrator Mode
- DNS
- Connection Time-Out

8

E-mail Environment Settings

E-mail Overview

The machine can send and receive e-mails.

The following services and features are available using e-mail:

- E-mail
- Store & Send Link
- Internet Fax Service
- Print E-mail
- E-mail Notification (Status notifications such as consumables)
- Job Completion Notice

Note

- This feature may not be available depending on the model or your machine configuration. For more information, contact out Customer Support Center.

E-mail

Scanned documents can be converted into electronic form and transmitted via e-mail.

Store & Send Link

The machine can convert a document, scanned by a user authenticated by themachine into electronic form, store it in the hard disk, and send a URL that indicatesthe location of the document.

Internet Fax Service

Unlike the normal fax transmissions via telephone lines, faxed data is transmitted via a corporate intranet or the Internet as an e-mail attachment.

The message body of e-mail is processed according to the settings in [IncomingInternet Fax Print Options] of CentreWare Internet Services.

Print E-mail

You can send and transfer e-mails with files attached from computers. File formats that can be attached to the e-mails are TIFF, PDF, JPEG (JFIF), XDW (DocuWorks documents), XBD (DocuWorks binders), and XPS (Microsoft XPS Format, Open XPS format).

The message body of e-mail is processed according to the settings in [Incoming E-mail Print Options] of CentreWare Internet Services.

Note

- XPS stands for XML Paper Specification.

E-mail Notification (Status notifications such as consumables)

The machine can notify the status information such as consumable status, parts status, and paper tray status that is set in [E-mail Notification for Machine Status] ofCentreWare Internet Services to a specified recipient. By receiving the statuses of consumables periodically or when they need to be replaced soon, you can properly determine when to replace the toner and drum cartridges.

It is recommended that you register the address of the system administrator or a shared address as the recipient of the e-mail.

Job Completion Notice

The following methods can be used to notify the completion of the jobs. Register the address of the network administrator or a shared address as necessary.

■ Notify the Completion of Jobs by E-mail

When a computer submitted a print job or a Direct Fax job to the machine, its completion can be notified by e-mail. For more information, refer to the help of theprint driver.

■ Notify Job Completion by E-mail

You can receive the result of the jobs performed by e-mail. For more information,refer to "Notify Job Completion by E-mail" (P.174).

■ E-mail Notification

You can receive an e-mail notification when a file is saved in a folder or a job flow ends. For more information, refer to "E-mail Notification" (P.288).

Preparations

The following items must be set to use the E-mail feature.

Reference

- For more information on the preparations to use the Internet Fax feature, refer to "Preparations" (P.328).

■Configuration on the Machine

Item	Description	E-mail	Store & Send Link	Print E-mail		E-mail Notification	Job Completion Notice
				via SMTP	via POP3		
TCP/IP address	The TCP/IP address for the machine. E-mails are sent via TCP/IP.	O	O	O	O	O	O
Subnet mask	Required when the network is divided into subnets.	△	△	△	△	△	△
Gateway address	Required when multiple networks are connected by gateways.	△	△	△	△	△	△
Machine e-mail address	Set the E-mail address of the machine.	O	O	O	O	O	O
DNS server address	Required when the addresses for a POP3 server and an SMTP server are set with a domain name format instead of their IP addresses. You can also acquire this from DHCP.	△	△	△	△	△	△
SMTP server address	The machine uses an SMTP server to send e-mails.The SMTP server can also be used for receiving e-mails.	O	O	O	△	O	O
SMTP AUTH login name and password	If an SMTP server requires authentication, specify an authentication user name. Also specify a password as required.	△	△	△	△	△	△
POP3 server	Set the POP3 server address.	△	△	X	O	△	△
POP login name and password	Set the POP receiving user name. Also specify a password as required.	△	△	X	O	△	△

Item	Description	E-mail	Store & Send Link	Print E-mail		E-mail Notification	Job Completion Notice
				via SMTP	via POP3		
S/MIME settings	Set the S/MIME information.	△	-	△	△	-	-

O: Required to be set △: Set as required -: Not required to be set X: Not supported

Note

- To transmit e-mails encrypted by S/MIME or with digital signatures attached, a certificate must be ready in advance. For more information on a certificate, refer to "Configuration of E-mail Encryption/Digital Signature" (P.416).

■Configuration on the Server

Note

- For information on the Server Settings, contact your System Administrator.

Item	Description	E-mail	Store & Send Link	Print E-mail		E-mail Notification	Job Completion Notice
				via SMTP	via POP3		
Machine e-mail address	When using the E-mail feature on the machine, an e-mail account of the machine must be registered on a mail server in advance.	O	O	O	O	O	O
Host name	Set the host name and domain name of the machine along with the TCP/IP address for the machine on the DNS server.	△	△	△	△	△	△
Domain name		△	△	△	△	△	△

O:Required to be set △:Set as required

Installation Procedures

This section describes how to configure the machine to use the E-mail service.

The following shows the reference section for each procedure.

"Step 1 Enabling Port and Setting up TCP/IP" (P.355)

"Step 2 Configuring E-mail Environment" (P.356)

"CentreWare Internet Services Setting Items" (P.358)

Step 1 Enabling Port and Setting up TCP/IP

Enable the E-mail port, and set the IP address.

Note

- You can configure the settings using CentreWare Internet Services. For information on how to use CentreWare Internet Services, refer to "Configuring Machine Settings Using CentreWare Internet Services" (P.331).

1 Display the [Tools] screen.

1) Press the <Log In/Out> button.

2) Enter the system administrator's user ID with the numeric keypad or the keyboard displayed on the screen, and select [Enter].

When a passcode is required, select [Next] and enter the system administrator's passcode, and select [Enter].

Note

- The default user ID is "11111".
- The default passcode is "x-admin".

3) Select [Tools] on the Services Home screen.

2 Enable ports to use for the E-mail feature.

1) Select [Connectivity & Network Setup].

2) Select [Port Settings].

3) Select [Send E-mail], and then select [Change Settings].

4) Select [Port Status], and then select [Change Settings].

5) Select [Enabled], and then select [Save].

6) Select [Close].

7) Select [Enabled] on the [Receive E-mail - Port Status] screen under [Receive E-mail] as described above to use the Print E-mail feature.

8) Select [Enabled] on the [E-mail Notification - Port Status] screen under [E-mail Notification Service] as described above to use the E-mail Notification or the Job Completion Notification feature.

9) Select [Close] repeatedly until the [Tools] screen is displayed.

3 Set an IP address and the other addresses.

Skip this step if an IP address is already set. If DHCP or BOOTP is available in your environment, configure the method for obtaining the address. If an IP address cannot be obtained automatically or manual configuration is preferred, confirm the settings of an IP address, a subnet mask, and a gateway address.

Reference

- For information on how to set an IP address, refer to "Protocol Settings" (P.200).

4 Select [Close] repeatedly until the [Tools] screen is displayed.

5 Select [Close].

Note

- Rebooting the machine may be required depending on the settings. When a message displayed on the screen, follow the message and reboot the machine.

6 Print a configuration report to confirm that the ports are enabled and that TCP/IP is set up correctly.

Reference

- For information on how to print a configuration report, refer to "Print Reports" (P.115).

Step 2 Configuring E-mail Environment

The following describes the configuration procedures to use the E-mail features.

Reference

- You can configure the settings using CentreWare Internet Services. For the items that can be configured using CentreWare Internet Services, refer to "CentreWare Internet Services Setting Items" (P.358).
- For information on how to start CentreWare Internet Services, refer to "Starting CentreWare Internet Services" (P.330).

1 Display the [Tools] screen.

1) Press the <Log In/Out> button.

2) Enter the system administrator's user ID with the numeric keypad or the keyboard displayed on the screen, and select [Enter].

When a passcode is required, select [Next] and enter the system administrator's passcode, and select [Enter].

Note

- The default user ID is "11111".
- The default passcode is "x-admin".

3) Select [Tools] on the Services Home screen.

2 Set up the e-mail address of the machine.

1) Select [Connectivity & Network Setup].

2) Select [Machine's E-mail Address/Host Name], and then configure items.

Reference

- For information on how to set an e-mail address, refer to "Machine's E-mail Address/Host Name" (P.205).

3) Select [Close] repeatedly until the [Tools] screen is displayed.

3 Set up the protocol to receive e-mails.

1) Select [Connectivity & Network Setup].
2) Select [Other Settings].
3) Select [Protocol to Receive E-mail], and then select [Change Settings].
4) Select either [SMTP] or [POP3] as appropriate for your environment.
5) Select [Save].
6) Select [Close] repeatedly until the [Tools] screen is displayed.

4 Configure the server settings for receiving e-mails.

1) Select [Connectivity & Network Setup].
2) Select [Outgoing/Incoming E-mail Settings].

■When [SMTP] is selected for [Protocol to Receive E-mail]

Configure the SMTP server.

Reference

- For information on how to configure the SMTP server, refer to "SMTP Server Settings" (P.213).
- For information on how to set the machine's e-mail address when you receive e-mails via SMTP, refer to"Machine's E-mail Address/Host Name" (P.205).

■When [POP3] is selected for [Protocol to Receive E-mail]

Configure the POP3 server.

Reference

- For information on how to configure the POP3 server, refer to "POP3 Server Settings" (P.213).

Reference

- For information on how to set the machine's e-mail address when you receive e-mails via POP3, refer to "Machine's E-mail Address/Host Name" (P.205).

Note

- When you enable POP over SSL in the POP3 Server Setting, receiving e-mail will be encrypted. POP over SSL can be set using CentreWare Internet Services. For information on the setting procedure, refer to "Configuring Machine Settings Using CentreWare Internet Services" (P.331).

5 Configure the server settings for sending e-mails.

Note

- To send e-mails, SMTP server settings are required. When [POP3] is selected in [Protocol to Receive E-mail], configure the SMTP server in [Outgoing/Incoming E-mail Settings].

Reference

- For information on how to configure the e-mail transmission, refer to "SMTP Server Settings" (P.213).

6 Select [Close] repeatedly until the [Tools] screen is displayed.

7 Configure the domain filtering for receiving e-mails as necessary.

Reference

- For information on how to configure the domain filtering, refer to "Domain Filtering" (P.226).

8 Set up the S/MIME information.

1) Select [Connectivity & Network Setup].

2) Select [Security Settings].

3) Select [S/MIME Settings], and then set the items.

Reference

- For more information on how to configure S/MIME, refer to "S/MIME Settings" (P.221).

9 Select [Close] repeatedly until the [Tools] screen is displayed.

10 Select [Close].

Note

- Rebooting the machine may be required depending on the settings. When a message displayed on the screen, follow the message and reboot the machine.

11 Print a configuration report to confirm that the settings of each item.

Reference

- For information on how to print a configuration report, refer to "Print Reports" (P.115).

CentreWare Internet Services Setting Items

You can configure the following setting items using CentreWare Internet Services:

Reference

- For details on the setting items, click [Help] at the upper right corner of the CentreWare Internet Services screen to see help.
- For information on how to start CentreWare Internet Services, refer to "Starting CentreWare Internet Services" (P.330).

Important

- To display the online help for CentreWare Internet Services, users need to have the environment to connect to the internet. The communication fee shall be borne by you.

- Machine's E-mail Address
- Setup E-mail Notification
- Port Settings
- SMTP Server Settings
- POP3 Server Settings
- Receiving Protocol
- Domain Filtering
- S/MIME Settings

9

Scanner Environment Settings

Scan Service Overview

The machine is equipped with scanning capabilities.

The following scan services are available on the machine:

- E-mail
- Store to Folder
- Scan to PC
- Network Scanning (Job Template Scanning)
- Store to USB
- Job Flow Scanning
- Scan to My Folder
- Store & Send Link
- Store to WSD

Note

- WSD stands for Web Services on Devices.
- This feature may not be available depending on the model or your machine configuration. For more information, contact out Customer Support Center.

E-mail

Scanned documents can be converted into electronic data and sent via e-mail.

Reference

- For information on e-mail environment settings, refer to "E-mail Environment Settings" (P.349)".

Store to Folder

You can scan a document you want to retrieve as electronic data, and store it in a folder. The document can be accessed later from any computers on the network.

Reference

- For information on the Store to Folder service, refer to "Configuration of Store to Folder" (P.362).

Scan to PC

When the machine is connected to a network, you can store the scanned data on network computers using the FTP or SMB protocol.

You can scan a document you want to retrieve as electronic data, and store it on a computer connected to a network.

Reference

- For information on the Scan to PC service, refer to "Configuration of Scan to PC" (P.364).

Network Scanning (Job Template Scanning)

A file defined with scanning conditions is called a job template. You can apply a job template to a document scanned on the machine. The scanned document is saved on the machine as a file and sent automatically to the computer (server).

Reference

- For information on how to configure a job template, refer to "Configuration of Network Scanning (Job Template Scanning)" (P.373).

Scan to My Folder

When you select [Login to Remote Accounts] for [Login Type] and select [Enabled] for [Scan to My Folder] using CentreWare Internet Services, you can forward scanned documents to different recipients that corresponds to the login user.

Reference

- For more information on configuration procedures, refer to "Configuration of Scan to My Folder" (P.367).

Store to USB

You can store the scanned data to a USB memory device when you insert the USB 2.0 memory device into the USB memory slot of the control panel of the machine. You can also select data stored in the USB memory device and print the data directly.

Reference

- For information on the Store to USB service settings, refer to "Configuration of Store to USB" (P.372).

Job Flow Scanning

You can execute a scan job using the job flow sheets for the scan documents. Create the job flow sheets using Device Setup tool on the network.

Reference

- For information on how to configure job flow scanning, refer to "Configuration of Job Flow Sheets" (P.376).

Store & Send Link

The machine can convert a scanned document into electronic form, store it in the hard disk, and send a URL that indicates the location of the document.

Note

- This feature may not be available depending on the model or your machine configuration. For information, contact out Customer Support Center.
- To use the Store & Send Link feature, you need to configure the authentication settings.

Reference

- For information on the Store & Send Link service, refer to "Configuration of Store & Send Link" (P.377).

Store to WSD

You can remotely scan the document and store the image by operating on thecomputer. Using the control panel of the machine, you can also select a destinationcomputer on a network to store the scanned data.

Note

- WSD stands for Web Services on Devices.

Reference

- For more information on the Store to WSD service, refer to "Configuration of Store to WSD" (P.379).

Configuration of Store to Folder

This section describes configuration procedures to use the Store to Folder service on the machine.

This section describes configuration procedures to use the Store to Folder service on the machine.

The following shows the reference section for each procedure.

"Step 1 Enabling Port and Setting up TCP/IP" (P.362)

"Step 2 Registering a Folder" (P.363)

"Step 3 Configuring a Computer" (P.363)

Step 1 Enabling Port and Setting up TCP/IP

Using Network Scanner Utility 3 (Scan Driver and Stored File Manager 3), which supports WebDAV protocol, and Device Setup Tool, enable the SNMP, SOAP, and WebDAV ports and set up an IP address.

Important

- We recommend you to enable [HTTP - SSL / TLS Communication] under [SSL / TLS Settings] when you use WebDAV. This is an effectual way to avoid password leaking.

Note

- You can configure the settings using CentreWare Internet Services. For information on how to use CentreWare Internet Services, refer to "Configuring Machine Settings Using CentreWare Internet Services" (P.331).

1 Display the [Tools] screen.

1) Press the <Log In/Out> button.

2) Enter the system administrator's user ID with the numeric keypad or the keyboard displayed on the screen, and select [Enter].

When a passcode is required, select [Next] and enter the system administrator's passcode, and select [Enter].

Note

- The default user ID is "11111".
- The default passcode is "x-admin".

3) Select [Tools] on the Services Home screen.

2 Enable the ports.

1) Select [Connectivity & Network Setup].

2) Select [Port Settings].

3) Select [SNMP], and then select [Change Settings].

4) Select [Port Status], and then select [Change Settings].

5) Select [Enabled], and then select [Save].

6) Select [Close].

7) Select [SOAP], and then select [Change Settings].

8) Select [Port Status], and then select [Change Settings].

9) Select [Enabled], and then select [Save].

10)Select [Close].

11)Select [WebDAV], and then select [Change Settings].

12)Select [Port Status], and then select [Change Settings].

13)Select [Enabled], and then select [Save].

14)Select [Close] repeatedly until the [Tools] screen is displayed.

3 Set an IP address and the other addresses.

Skip this step if an IP address is already set. If DHCP or BOOTP is available in your environment, configure the method for obtaining the address. If an IP address cannot be obtained automatically or manual configuration is preferred, confirm the settings of an IP address, a subnet mask, and a gateway address.

Reference

- For information on how to set an IP address, refer to ""Protocol Settings" (P.200).

4 Select [Close] repeatedly until the [Tools] screen is displayed.

5 Select [Close].

Note

- Rebooting the machine may be required depending on the settings. When a message displayed on the screen, follow the message and reboot the machine.

6 Print a configuration report to confirm that the WebDAV port is enabled and that TCP/ IP is set up correctly.

Reference

- For information on how to print a configuration report, refer to ""Print Reports" (P.115).

Step 2 Registering a Folder

Register a folder to store scanned data.

Reference

- For information on registering a folder, refer to "Create Folder" (P.276).

Step 3 Configuring a Computer

To use Network Scanner Utility 3, install Network Scanner Utility 3 on a computer.

Reference

- Network Scanner Utility 3 is included in the Media (Software/Product Manual) provided with the machine. For information on how to install the Network Scanner Utility 3, refer to the manual contained in the Media (Software/Product Manual).

Reference

- For information on the usage of the Network Scanner Utility 3, refer to "12 Computer Operations" in the User Guide.

Configuration of Scan to PC

This section describes how to configure the machine to use the Scan to PC service.

The following shows the reference section for each procedure.

"Step 1 Preparations" (P.364)

"Step 2 Enabling Port and Setting up TCP/IP" (P.365)

"Step 3 Configuration on the Computer" (P.366)

Step 1 Preparations

The following items are required to use the Scan to PC feature.

Using FTP

To transfer data via FTP, one of the following FTP servers and an account to the FTP server (login name and password) are required.

- Microsoft Windows Server 2003, Microsoft Windows Server 2008, Microsoft Windows Server 2008 R2, Microsoft Windows Server 2012, Microsoft Windows Server 2012 R2, Microsoft Windows Vista, Microsoft Windows 7, Microsoft Windows 8, or Microsoft Windows 8.1

  FTP service of Microsoft Internet Information Server 6.0
- Microsoft Windows 2000 Server, or Microsoft Windows 2000 Professional

  FTP service of Microsoft Internet Information Server 3.0 or later
- Mac OS X

  FTP service of Mac OS X 10.5/10.6, Mac OS X 10.7 Lion, OS X 10.8 Mountain Lion, OS X 10.9 Mavericks, and OS X 10.10 Yosemite

Reference

- For information on how to configure the FTP service, refer to the manual provided with the software. For information on how to configure the settings on Mac OS X 10.7 Lion, OS X 10.8 Mountain Lion, OS X 10.9 Mavericks, and OS X 10.10 Yosemite, consult the official website of Apple Inc.

Using SMB

To transfer data via SMB, your computer must run on one of the following operating systems that includes folder sharing.

For Mac OS X, a shared user account is required on the Mac OS X.

- Microsoft Windows Server 2003
- Microsoft Windows Server 2008
- Microsoft Windows Server 2008 R2
- Microsoft Windows Server 2012
- Microsoft Windows Server 2012 R2
- Microsoft Windows Vista
- Microsoft Windows 7
- Microsoft Windows 8
- Microsoft Windows 8.1

- Mac OS X 10.5 Leopard
- Mac OS X 10.6 Snow Leopard
- Mac OS X 10.7 Lion
- OS X 10.8 Mountain Lion
- OS X 10.9 Mavericks

Step 2 Enabling Port and Setting up TCP/IP

To use Scan to PC service, enable the port (SMB or FTP client) and set the IP address.The following describes the configuration procedures on the machine.

Note

- You can configure the settings using CentreWare Internet Services. For information on how to use CentreWare Internet Services, refer to "Configuring Machine Settings Using CentreWare Internet Services" (P.331).

1 Display the [Tools] screen.

1) Press the <Log In/Out> button.

2) Enter the system administrator's user ID with the numeric keypad or the keyboard displayed on the screen, and select [Enter].

When a passcode is required, select [Next] and enter the system administrator's passcode, and select [Enter].

Note

- The default user ID is "11111".
- The default passcode is "x-admin".

3) Select [Tools] on the Services Home screen.

2 Enable the port.

■Using SMB

Enable the SMB port.

1) Select [Connectivity & Network Setup].

2) Select [Port Settings].

3) Select [SMB Client], and then select [Change Settings].

4) Select [Port Status], and then select [Change Settings].

5) Select [Enabled], and then select [Save].

6) Select [Close] repeatedly until the [Tools] screen is displayed.

■Using FTP

Enable the FTP port.

1) Select [Connectivity & Network Setup].

2) Select [Port Settings].

3) Select [FTP Client], and then select [Change Settings].

4) Select [Port Status], and then select [Change Settings].

5) Select [Enabled], and then select [Save].

6) Select [Close] repeatedly until the [Tools] screen is displayed.

3 Set the IP address of the machine and the other addresses.

Skip this step if an IP address is already set. If DHCP or BOOTP is available in your environment, configure the method for obtaining the address. If an IP address cannot be obtained automatically or manual configuration is preferred, confirm the settings of an IP address, a subnet mask, and a gateway address.

Reference

- For information on how to set an IP address, refer to "Protocol Settings" (P.200).

4 Select [Close] repeatedly until the [Tools] screen is displayed.

5 Select [Close].

Note

- Rebooting the machine may be required depending on the settings. When a message displayed on the screen, follow the message and reboot the machine.

6 Print a configuration report to confirm that the SMB Client port or FTP client is enabled and that TCP/IP is set up correctly.

Reference

- For information on how to print a configuration report, refer to "Print Reports" (P.115).

Step 3 Configuration on the Computer

Create a destination folder on your computer.

Using FTP

Create a destination folder on the server where you login and set write rights on the folder.

Using SMB

Create a shared folder on your computer and set the write rights on the shared folder.

Note

- To use SMB on Mac OS X, set [Windows Sharing] to [On] in the [Service] tab of [Sharing] under [System Preferences].

Configuration of Scan to My Folder

This section describes how to configure the machine to use the Scan to My Folder service.

The following shows the reference section for each procedure.

"Step1 Preparations" (P.367)

"Step 2 Enabling SMB Port and Setting up TCP/IP" (P.367)

"Step 3 Configuring Remote Authentication" (P.368)

"Step 4 Configuring Scan to My Folder" (P.369)

"Step5 Configuration on the Computer" (P.371)

Step1 Preparations

The Scan to My Folder service allows you to forward scanned files to recipients which vary depending on a login user when [Login to Remote Accounts] is selected for [Login Type]. The following items are required to use the Scan to My Folder feature.

Remote Authentication System

To use the Scan to My Folder service, a remote authentication system is required.

Reference

- For more information about a remote authentication system, refer to "Authentication System" (P.214).

Destination Computer

Step 2 Enabling SMB Port and Setting up TCP/IP

To use Scan to My Folder service, enable the SMB port and set the IP address. The following describes the configuration procedures on the machine.

Note

- You can configure the settings using CentreWare Internet Services. For information on how to use CentreWare Internet Services, refer to "Configuring Machine Settings Using CentreWare Internet Services" (P.331).

1 Display the [Tools] screen.

1) Press the <Log In/Out> button.

2) Enter the system administrator's user ID with the numeric keypad or the keyboard displayed on the screen, and select [Enter].

When a passcode is required, select [Next] and enter the system administrator's passcode, and select [Enter].

Note

- The default user ID is "11111".
- The default passcode is "x-admin".

3) Select [Tools] on the Services Home screen.

2 Enable the SMB port.

1) Select [Connectivity & Network Setup].

2) Select [Port Settings].

3) Select [SMB Client], and then select [Change Settings].

4) Select [Port Status], and select [Change Settings].

5) Select [Enabled], and then select [Save].

6) Select [Close] repeatedly until the [Tools] screen is displayed.

3 Set the IP address and the other addresses.

Skip this step if an IP address is already set. If DHCP or BOOTP is available in your environment, configure the method for obtaining the address. If an IP address cannot be obtained automatically or manual configuration is preferred, confirm the settings of an IP address, a subnet mask, and a gateway address.

Reference

- For information on how to set an IP address, refer to "Protocol Settings" (P.200).

4 Select [Close] repeatedly until the [Tools] screen is displayed.

5 Select [Close].

Note

- Rebooting the machine may be required depending on the settings. When a message displayed on the screen, follow the message and reboot the machine.

6 Print a configuration report to confirm that the SMB Client port is enabled and that TCP/IP is set up correctly.

Reference

- For information on how to print a configuration report, refer to "Print Reports" (P.115).

Step 3 Configuring Remote Authentication

Set the Login Type to Login to Remote Accounts.

Note

- You can configure the settings using CentreWare Internet Services. For information on how to use CentreWare Internet Services, refer to "Configuring Machine Settings Using CentreWare Internet Services" (P.331).

1 Display the [Tools] screen.

1) Press the <Log In/Out> button.

2) Enter the system administrator's user ID with the numeric keypad or the keyboard displayed on the screen, and select [Enter].

When a passcode is required, select [Next] and enter the system administrator's passcode, and select [Enter].

Note

- The default user ID is "11111".
- The default passcode is "x-admin".

3) Select [Tools] on the Services Home screen.

2 Set the Login Type to Login to Remote Accounts.

1) Select [Authentication/Security Settings].

2) Select [Authentication].

3) Select [Login Type].

4) Select [Login to Remote Accounts], and then select [Save].

5) Select [Close].

6) Select [Close] repeatedly until the [Tools] screen is displayed.

3 Configure a remote authentication server to use.

Note

- You can select from [Kerberos (Windows 2000)], [Kerberos (Solaris)], [LDAP], and [SMB].

Reference

- For information on the remote authentication server settings, refer to "Authentication System Setup" (P.214).

1) Select [System Settings].

2) Select [Connectivity & Network Setup].

3) Select [Remote Authentication/Directory Service].

4) Select [Authentication System Setup].

5) Select [Authentication System], and then select [Change Settings].

6) Select the remote authentication system to use, and then select [Save].

7) Select [Close].

Note

- If an authentication setting is not configured on a remote authentication server selected, configure settings under [Remote Authentication/Directory Service]. For [LDAP Server/ Directory Service Settings], a configuration is required regardless of a remote authentication server selected.
  - For information on Kerberos Server Settings, refer to "Kerberos Server Settings" (P.215).
  - For information on LDAP Server/Directory Service Settings, refer to "LDAP Server/Directory Service Settings (P.216).
  - For information on SMB Server Settings, refer to "SMB Server Settings" (P.219).

4 Select [Close] repeatedly until the [Tools] screen is displayed.

5 Select [Close].

Note

- Rebooting the machine may be required depending on the settings. When a message displayed on the screen, follow the message and reboot the machine.

6 Print a configuration report to confirm that the SMB port is enabled and that TCP/IP is set up correctly.

Reference

- For information on how to print a configuration report, refer to "Print Reports" (P.115).

Step 4 Configuring Scan to My Folder

Configure the Scan to My Foldere settings using CentreWare Internet Services.

1 Start CentreWare Internet Services.

Reference

- For information on how to start CentreWare Internet Services, refer to "Starting CentreWare Internet Services" (P.330).

2 Enable the feature of the Scan to My Folder

1) Click the [Properties] tab.

2) Click [Services].

3) Click [Scan to My Folder].

4) Click [General].

5) Select the [Enabled] check box under [Status].

6) Check the [Enabled] checkbox of [Allow User to Change File Storage Location] to allow users to change the storage location.

Note

- Checking this checkbox allows users to change the storage location on the control panel when performing the Scan to My Folder service. When you do not check this checkbox, the storage location specified in the next procedure cannot be changed.

3 Specify the storage location (directory).

■Transferring files to a directory specified by a login user using LDAP (directory service) information

1) Select the [LDAP Query] check box for [Determine Home Directory].

The folder specified for [homeDirectory] of a user profile which is registered with the LDAP (user information management) server is defined as a storage location by default.

Note

- To change a storage location, select [LDAP Mapping for Home Directory] and enter the property name, which a storage location is set, in [Home], and then select [Apply].
- The [LDAP User Mappings] screen which is displayed by clicking [LDAP Mapping for Home Directory] is identical with the screen displayed by selecting [Properties] > [Connectivity] > [Protocols] > [LDAP] > [LDAP User Mappings].

■Transferring files to a directory specified by CentreWare Internet Services without using LDAP (directory service) information

1) Select the [No LDAP Query] check box for [Determine Home Directory].

2) Enter a directory name of the storage location in [Network Home Path].

Specify a folder name using UNC format (for example: \\server name\shared name\folder name\folder name2).

4 To specify a subdirectory under the directory specified in step 3, perform the following procedure:

1) Select [Automatically Create Subdirectory] check box, and enter a subdirectory name in [Subdirectory] to specify a subdirectory.

2) When you use the login user name as a subdirectory name, select [Append "User Name" to Path] check box.

3) If you select the [Append "User Name" to Path] check box, selecting the [Automatically Create "User Name" directory if one does not exist] check box creates a subdirectory with a user name automatically when the user name directory does not exist.

4) When you select both the [Automatically Create Subdirectory] and [Append "User Name" to Path] check boxes, specify which directory, subdirectory or subdirectory with a user name, becomes a subdirectory in [Directory Structure].

5 Specify the authentication information for accessing the destination computer.

■Accessing the destination computer both by the user authentication and by the domain information used when logged in to the machine

1) Select the [Authenticated User and Domain] check box for [Login Credentials to Access the Destination].

■Accessing the destination computer only by the user authentication information used when logged in to the machine

1) Select the [Authenticated User] check box for [Login Credentials to Access the Destination].

■Accessing the destination computer by the authentication information registered with the machine on CentreWare Internet Services

1) Select the [System] check box for [Login Credentials to Access the Destination].

2) Configure the authentication information such as [Login Name] and [Passcode].
Enter a login name in [Login Name] with up to 97 single-byte characters. Enter a passcode in [Passcode] with up to 32 single-byte characters. Re-enter the passcode in [Retype Passcode] for confirmation.

6 Click [Apply].

Step5 Configuration on the Computer

Create a destination folder on your computer and set it as a shared folder, and then set write rights on the folder.

Note

- To use SMB on Mac OS X, set [Windows Sharing] to [On] in the [Service] tab of [Sharing] under [System Preferences].

Configuration of Store to USB

This section describes how to configure the machine to use the Store to USB service.

"Available USB Memory Devices" (P.372)

"CentreWare Internet Services Setting Items" (P.372)

Available USB Memory Devices

The Store to USB service allows you to directly save the scanned data to a USB 2.0 memory device which is inserted into the USB memory slot on the control panel of the machine.

- USB 2.0 memory devices
- USB memory devices with the capacity of up to 128 GB
- USB memory devices that support FAT12, FAT16, FAT32, or VFAT (long name)

Note

- USB memory devices that are encrypted with software cannot be used with the machine.

CentreWare Internet Services Setting Items

You can enable/disable the Store to USB service using CentreWare Internet Services. When you disable the service, the Store to USB button is not displayed on the Services Home screen, and you cannot use the service.

The Store to USB service is set to enabled by factory default.

Reference

- For details on the setting items, click [Help] at the upper right corner of CentreWare Internet Services screen to see help.

Important

- To display the online help for CentreWare Internet Services, users need to have the environment to connect to the internet. The communication fee shall be borne by you.

Reference

- For information on how to start CentreWare Internet Services, refer to "Starting CentreWare Internet Services" (P.330).

Configuration of Network Scanning (Job Template Scanning)

This section describes how to configure the machine to use the Network Scanning service.

The following shows the reference section for each procedure.

"Step 1 Preparations" (P.373)

"Step 2 Enabling Ports and Setting up TCP/IP" (P.373)

"Step 3 Configuring the SNMP Port" (P.374)

"Step 4 Configuration on the Computer" (P.375)

Step 1 Preparations

The following environment is required to use the Network Scanning feature on the machine.

- To use SMB forwarding, your computer must run on one of the following operating systems that supports folder sharing.
  - Microsoft Windows NT 4.0
  - Microsoft Windows 2000
  - Microsoft Windows Server 2003
  - Microsoft Windows Server 2008
  - Microsoft Windows Server 2008 R2
  - Microsoft Windows Server 2012
  - Microsoft Windows Server 2012 R2
  - Microsoft Windows Vista
  - Microsoft Windows 7
  - Microsoft Windows 8
  - Microsoft Windows 8.1

Step 2 Enabling Ports and Setting up TCP/IP

To use Network Scanning service, enable the port and set the IP address. The following describes the configuration procedures on the machine.

Note

- You can configure the settings using CentreWare Internet Services. For information on how to use CentreWare Internet Services, refer to "Configuring Machine Settings Using CentreWare Internet Services" (P.331).

1 Display the [Tools] screen.

1) Press the <Log In/Out> button.

2) Enter the system administrator's user ID with the numeric keypad or the keyboard displayed on the screen, and select [Enter].

When a passcode is required, select [Next] and enter the system administrator's passcode, and select [Enter].

Note

- The default user ID is "11111".
- The default passcode is "x-admin".

3) Select [Tools] on the Services Home screen.

2 Enable the SNMP port.

1) Select [Connectivity & Network Setup].

2) Select [Port Settings].

3) Select [SNMP], and then select [Change Settings].

4) Select [Port Status], and select [Change Settings].

5) Select [Enabled], and then select [Save].

6) Select [Close] repeatedly until the [Port Settings] screen is displayed.

7) Enable [Port Status] on the [SMB] or [FTP Client] screen, and enable [Internet Services (HTTP)] on the [Internet Services - Port Status] screen as described above.

8) Select [Close] repeatedly until the [Port Settings] screen is displayed.

3 Set the IP address and the other addresses.

Skip this step if an IP address is already set. If DHCP or BOOTP is available in your environment, configure the method for obtaining the addresses. If an IP address cannot be obtained automatically or manual configuration is preferred, confirm the settings of an IP address, a subnet mask, and a gateway address.

Reference

- For information on how to set an IP address, refer to "Protocol Settings" (P.200).

4 Select [Close] repeatedly until the [Tools] screen is displayed.

5 Select [Close].

Note

- Rebooting the machine may be required depending on the settings. When a message displayed on the screen, follow the message and reboot the machine.

6 Print a configuration report to confirm that the ports are enabled and that TCP/IP is set up correctly.

Reference

- For information on how to print a configuration report, refer to "Print Reports" (P.115).

Step 3 Configuring the SNMP Port

Configure the transport protocol for the SNMP port using CentreWare Internet Services.

1 Start CentreWare Internet Services.

Note

- For information on how to start CentreWare Internet Services, refer to "Starting CentreWare Internet Services" (P.330).

2 Configure the transport protocol for the SNMP port.

1) Click the [Properties] tab.

2) Click [Connectivity].

3) Click [Port Settings].

4) Select the [UDP] check box under [SNMP].

5) Click [Apply].

6) Enter the system administrator's user ID and passcode into [User Name] and [Password] respectively, and click [OK].

Note

- For information on how to start CentreWare Internet Services, refer to "Starting CentreWare Internet Services" (P.330).

7) The right frame of the web browser changes to the machine reboot display.

8) Click [Reboot Machine]. The machine reboots and the settings are enabled.

Step 4 Configuration on the Computer

Reference

- For details on the setting items, click [Help] at the upper right corner of the CentreWare Internet Services screen to see help.

Important

- To display the online help for CentreWare Internet Services, users need to have the environment to connect to the internet. The communication fee shall be borne by you.

Configuration of Job Flow Sheets

This section describes how to configure the machine to use the Job Flow Sheets service.

"Step 1 Enabling Ports and Setting up TCP/IP" (P.376)

"Step 2 Configuring the SNMP Port" (P.376)

"Step 3 Configuration on the Computer" (P.376)

Step 1 Enabling Ports and Setting up TCP/IP

To use the Job Flow Sheets service, enable the SOAP, SNMP, and Internet Services(HTTP) ports, and set an IP address and other addresses. The following describes the configuration procedures on the machine.

Note

- You can configure the settings using CentreWare Internet Services. For information on how to use CentreWare Internet Services, refer to "Configuring Machine Settings Using CentreWare Internet Services" (P.331).

Step 2 Configuring the SNMP Port

Configure the transport protocol for the SNMP port using CentreWare Internet Services.

1 Start CentreWare Internet Services

Reference

- For information on how to start CentreWare Internet Services, refer to "Starting CentreWare Internet Services" (P.330).

2 Configure the transport protocol for the SNMP port.

1) Click the [Properties] tab.

2) Click [Connectivity].

3) Click [Port Settings].

4) Select the [UDP] check box under [SNMP].

5) Click [Apply].

6) The right frame of the web browser changes to the machine reboot display.

7) Click [Reboot Machine]. The machine reboots and the settings are enabled.

Step 3 Configuration on the Computer

Create job flows using Device Setup Tool to use for scanned documents.

Note

- Device Setup Tool is included in ApeosWare Management Suite, which you can download from our Web site.

Configuration of Store & Send Link

This section describes how to configure the machine to use the Store & Send Link service.

Important

- When a user is notified by e-mail of a URL location to retrieve scanned data, the e-mail message is not encrypted, which enables the user to retrieve the data without password authentication. Thus, in case the URL information is leaked on the e-mail transmission path due to any attempts, other parties to whom the information is leaked cannot be tracked. To prevent others from viewing scanned data, select [PDF] or [DocuWorks] in [File Format] and set a password in [PDF Security] or [DocuWorks Security] before scanning a document.

Note

- To use the Store & Send Link service, the configuration for authentication is required.

"Step 1 Configuring E-mail" (P.377)

"Step 2 Enabling Authentication" (P.377)

"Step 3 Other Settings" (P.377)

"Step 4 CentreWare Internet Services Setting Items" (P.377)

Step 1 Configuring E-mail

Configure the e-mail settings on the machine.

Reference

- For information on how to configure e-mail settings, refer to.

Step 2 Enabling Authentication

Configure the authentication settings on the machine.

Reference

- For information on how to configure e-mail settings, refer to "Configuration for Authentication" (P.439).

Step 3 Other Settings

Configure the following items if necessary.

- URL File Expiration
- Generation of URL Link
- Store & Send Link - Maximum File Size
- Print Login Name on PDF Files

Reference

- For information about URL File Expiration, refer to "URL File Expiration" (P.243).
- For information about Generation of URL Link, refer to "Generation of URL Link" (P.244).
- For information about Store & Send Link - Maximum File Size, refer to "Store & Send Link - Maximum File Size" (P.244).
- For information about Print Logon Name on PDF Files, refer to "Print Login Name on PDF Files" (P.244).

Step 4 CentreWare Internet Services Setting Items

You can configure the following items using CentreWare Internet Services:

- URL File Expiration

- Generation of URL Link
- Maximum File Size
- Subject
- Message
- Attachment
- Device Information
- Signature

Reference

- For details on the setting items, click [Help] at the upper right corner of the CentreWare Internet Services screen to see help.
- For information on how to start CentreWare Internet Services, refer to "Starting CentreWare Internet Services" (P.330).

Important

- To display the online help for CentreWare Internet Services, users need to have the environment to connect to the internet. The communication fee shall be borne by you.

Configuration of Store to WSD

This section describes how to configure the machine to use the Store to WSD service.

The following shows the reference section for each procedure.

"Step 1 Preparations" (P.379)

"Step 2 Enabling Port" (P.379)

"Step 3 Confirmation on the Computer" (P.380)

Note

- WSD stands for Web Services on Devices.

Step 1 Preparations

The following environment is required to use the Store to WSD feature on the machine.

- The following operation system must be installed on a destination computer.
  - Microsoft Windows 8
  - Microsoft Windows 8.1
  - Microsoft Windows 7
  - Microsoft Windows Vista Service Pack 2
  - Microsoft Windows Server 2012
  - Microsoft Windows Server 2012 R2

Note

- WSD stands for Web Services on Devices.

Step 2 Enabling Port

To use the Store to WSD service, enable the WSD scan port. The following describes the configuration procedures on the machine.

Note

- You can configure the settings using CentreWare Internet Services. For information on how to use CentreWare Internet Services, refer to "Configuring Machine Settings Using CentreWare Internet Services" (P.331).
- WSD stands for Web Services on Devices.

1 Display the [Tools] screen.

1) Press the <Log In/Out> button.

2) Enter the system administrator's user ID with the numeric keypad or the keyboard displayed on the screen, and select [Enter].

When a passcode is required, select [Next] and enter the system administrator's passcode, and select [Enter].

Note

- The default user ID is "11111".
- The default passcode is "x-admin".

3) Select [Tools] on the Services Home screen.

2 Enable the port.

1) Select [Connectivity & Network Setup].
2) Select [Port Settings].
3) Select [WSD], and then select [Change Settings].
4) Select [WSD Scan - Port Status], and then select [Change Settings].
5) Select [Enabled], and then select [Save].
6) Select [Close] repeatedly until the [Tools] screen is displayed.

3 Select [Close].

Note

- Rebooting the machine may be required depending on the settings. When a message displayed on the screen, follow the message and reboot the machine.

4 Print a configuration report to confirm that the WSD port is set up correctly.

Reference

- For information on how to print a configuration report, refer to "Print Reports" (P.115).

Step 3 Confirmation on the Computer

Confirm that the machine name is displayed on the computer as a network device.

On Windows Vista, select [Control Panel] > [Hardware and Sound] > [Scanners and Cameras] (on Windows 7, select [Control Panel] > [Devices and Printers] / on Windows 8 and Windows 8.1, Select [Control Panel] > [Hardware and Sound] > [Device and Printers] / on Windows Server 2012, select [Control Panel] > [Hardware] > [Devices and Printers]), and confirm the machine name on the screen.

It is convenient to configure the settings such as the color format, file type, and resolution in [Scan Profiles] and save them in advance.

Reference

- For more information, refer to Windows Help.

Note

- On Windows Vista Home Basic or Home Premium, scanning with [Windows Fax and Scan] is not supported. Use other features such as [From scanner or camera] in [Microsoft Paint] for scanning.

10

Using IP Fax (SIP)

IP Fax (SIP) Overview

IP Fax (SIP) is a fax feature that sends and receives document data via the IP network of a corporation (the intranet). The IP Fax (SIP) complies with ITU-T Resolution T.38.

Because the IP Fax (SIP) uses the existing IP network for communications, you can reduce the telecommunications costs compared to a conventional G3 fax machine that uses the public telephone line.

Note

- The communication between IP Fax (SIP) devices is available for our compatible machines in a corporate intranet. (Able 1407 λ is not available.) For information on the compatible machines, contact our Customer Support Center.

Preparations

This section describes the prerequisites to use the IP fax (SIP) feature on the machine.

System Requirements for the Machine

- IP Fax (SIP) Kit
- The machine is connected to the intranet.

The following equipment can also be used but not required.

- SIP server
- VoIP gateway (to communicate with a G3 fax machine connected to the public phone line)

Note

- For more information about the SIP server and VoIP gateway, contact your system administrator
- Another optional component is required to use the IP Fax (SIP) feature for some models.

Settings by System Configuration

To use the IP Fax (SIP) feature, configure the following settings.

	Enabling port and setting up TCP/IP	Configuring SIP User ID	Configuring Fax environment	Configuring SIP server	Registering VoIP gateway
IP Fax (SIP) machine only	O	O	O	-	-
SIP server only	O	O	O	O	-
VoIP gateway only	O	O	O	-	O
SIP server and VoIP gateway	O	O	O	O	O

O:Required -:Not supported

Installation Procedures

This section describes the configuration procedures to use the IP Fax (SIP) feature on the machine.

"Step 1 Enabling Port and Setting up TCP/IP" (P.384)

"Step 2 Configuring the SIP User Name" (P.385)

"Step 3 Configuring Fax Environment" (P.386)

"Step 4 Configuring the SIP Server" (P.387)

"Step 5 Registering the VoIP Gateway" (P.388)

Step 1 Enabling Port and Setting up TCP/IP

To use the IP Fax (SIP) feature on the machine, enable the port and set the IP addresses. The following shows the configuration procedures on the machine.

Reference

- You can configure the settings using CentreWare Internet Services. For information on how to use CentreWare Internet Services, refer to "Configuring Machine Settings Using CentreWare Internet Services" (P.331).

1 Display the [Tools] screen.

1) Press the <Log In/Out> button.

2) Enter the system administrator's user ID with the numeric keypad or the keyboard displayed on the screen, and select [Enter].
When a passcode is required, select [Next] and enter the system administrator's passcode, and select [Enter].

Note

- The default user ID is "11111".
- The default passcode is "x-admin".

3) Select [Tools] on the Services Home screen.

2 Enable the SIP port.

1) Select [Connectivity & Network Setup].

2) Select [Port Settings].

3) Select [SIP], and then select [Change Settings].

4) Select [Port Status], and then select [Change Settings].

5) Select [Enabled], and then select [Save].

6) Select [Close] repeatedly until the [Tools] screen is displayed.

3 Set an IP address and the other addresses.
Skip this step if an IP address is already set. If DHCP or BOOTP is available in your environment, configure the method for obtaining the address. If an IP address cannot be

obtained automatically, or if manual configuration is preferred, confirm the settings of an IP address, a subnet mask, and a gateway address.

Reference

- For information on how to set an IP address, refer to "Protocol Settings" (P.200).

4 Select [Close] repeatedly until the [Tools] screen is displayed.

5 Select [Close].

Note

- Rebooting the machine may be required depending on the settings. When a message displayed on the screen, follow the message and reboot the machine.

6 Print a configuration report to confirm that the port is enabled and TCP/IP setting is set up correctly.

Reference

- For information on how to print a configuration report, refer to "Print Reports" (P.115).

Step 2 Configuring the SIP User Name

This section describes the configuration procedures of the SIP user name on the machine.

Reference

- You can configure the settings using CentreWare Internet Services. For information on how to use CentreWare Internet Services, refer to "Configuring Machine Settings Using CentreWare Internet Services" (P.331).

1 Display the [Tools] screen.

1) Press the <Log In/Out> button.

2) Enter the system administrator's user ID with the numeric keypad or the keyboard displayed on the screen, and select [Enter].
When a passcode is required, select [Next] and enter the system administrator's passcode, and select [Enter].

Note

- The default user ID is "11111".
- The default passcode is "x-admin".

3) Select [Tools] on the Services Home screen.

2 Set SIP User ID.

1) Select [Connectivity & Network Setup].

2) Select [SIP settings].

3) Select [SIP User ID (Sign-in Name)], and then select [Change Settings].

4) Enter a SIP User ID and select [Save].

Reference

- For information on SIP User ID, refer to "SIP Settings" (P.209).

3 Select [Close] repeatedly until the [Tools] screen is displayed.

4 Select [Close].

Note
- Rebooting the machine may be required depending on the settings. When a message displayed on the screen, follow the message and reboot the machine.

5 Print a configuration report to confirm that the port is enabled and TCP/IP setting is set up correctly.

Note
- For information on how to print a settings list, refer to "Print Reports" (P.115).

Step 3 Configuring Fax Environment

This section describes the configuration procedures of the Fax feature related to IP fax (SIP) on the machine.

Reference
- You can configure the settings using CentreWare Internet Services. For information on how to use CentreWare Internet Services, refer to "Configuring Machine Settings Using CentreWare Internet Services" (P.331).

1 Display the [Tools] screen.

1) Press the <Log In/Out> button.

2) Enter the system administrator's user ID with the numeric keypad or the keyboard displayed on the screen, and select [Enter].
When a passcode is required, select [Next] and enter the system administrator's passcode, and select [Enter].

Note
- The default user ID is "11111".
- The default passcode is "x-admin".

3) Select [Tools] on the Services Home screen.

2 Set items displayed on the [Fax/Internet Fax] screen.

1) Select [Fax Service Settings].

2) Select [Screen Defaults].

3) Configure the required settings, and then select [Save].

Reference
- For information on the screen default, refer to "Screen Defaults" (P.245).

3 Set the default settings of the Fax feature.

1) Select [Fax Defaults].

2) Configure the required settings, and then select [Save].

Reference
- For information on the fax default, refer to "Fax Defaults" (P.246).

4 Configure the settings related to fax control.

1) Select [Fax Control].

2) Configure the required settings, and then select [Save].

Reference

- For information on the fax control, refer to "Fax Control" (P.248)).

5 Configure the local terminal information.

1) Select [Local Terminal Information].

2) Configure the required settings, and then select [Save].

Reference

- For information on the local terminal information, refer to "Local Terminal Information" (P.258).

6 Select [Close] repeatedly until the [Tools] screen is displayed.

7 Select [Close].

Note

- Rebooting the machine may be required depending on the settings. When a message displayed on the screen, follow the message and reboot the machine.

8 Print a configuration report to confirm the fax settings.

Reference

- For information on how to print a configuration report, refer to "Print Reports" (P.115)

Step 4 Configuring the SIP Server

This section describes the configuration procedures to set the IP address, login username, and password of a SIP server to go through. Configure a SIP server when you use the IP fax (SIP) feature via a SIP server.

Reference

- You can configure the settings using CentreWare Internet Services. For information on how to use CentreWare Internet Services, refer to "Configuring Machine Settings Using CentreWare Internet Services" (P.331).

1 Display the [Tools] screen.

1) Press the <Log In/Out> button.

2) Enter the system administrator's user ID with the numeric keypad or the keyboard displayed on the screen, and select [Enter].
When a passcode is required, select [Next] and enter the system administrator's passcode, and select [Enter].

Note

- The default user ID is "11111".
- The default passcode is "x-admin".

3) Select [Tools] on the Services Home screen.

2 Configure SIP server settings.

Reference

- For more information on SIP server settings, refer to "SIP Settings" (P.209).

1) Select [Connectivity & Network Setup].

2) Select [SIP settings].

3) Select [Enable SIP Server], and then select [Change Settings].

4) Select [Yes], and then select [Save].

5) Select [SIP Server IP Address Resolution], and then select [Change Settings].

6) Select a method to obtain SIP server IP address, and then select [Save].

7) Select [SIP Proxy Server Setup], and then select [Change Settings].

8) Set the IP address, port number, login user name, login password, and server type.

Note

- The settings of port number, login user name, login password, and server type are required even when [SIP Server IP Address Resolution] is set to [DHCP] or [DHCP v6]

9) Select [SIP Registrar Server Setup], and then select [Change Settings].

10) Set the IP address, port number, login user name, login password, and server type.

Note

- The settings of the port number, login user name, login password, and server type are required even when [SIP Server IP Address Resolution] is set to [DHCP] or [DHCP v6].

11) Select [Close].

3 Select [Close] repeatedly until the [Tools] screen is displayed.

4 Select [Close].

Note

- Rebooting the machine may be required depending on the settings. When a message displayed on the screen, follow the message and reboot the machine.

5 Print a configuration report to confirm that the SIP server settings.

Reference

- For information on how to print a configuration report, refer to "Print Reports" (P.115).

Step 5 Registering the VoIP Gateway

This section describes the configuration procedures to register a VoIP gateway to go through.

Configure a VoIP gateway when you transmit IP fax (SIP) to a G3 fax machine that is connected to the public phone line.

You can configure up to 50 VoIP gateways.

1 Display the [Tools] screen.

1) Press the <Log In/Out> button.

2) Enter the system administrator's user ID with the numeric keypad or the keyboard displayed on the screen, and select [Enter].

When a passcode is required, select [Next] and enter the system administrator's passcode, and select [Enter].

Note

- The default user ID is "11111".
- The default passcode is "x-admin".

3) Select [Tools] on the Services Home screen.

2 Configure VoIP gateway settings.

Reference

- For more information on VoIP gateway registration, refer to ""VoIP Gateway Setup" (P.211).

1) Select [Connectivity & Network Setup].
2) Select [SIP Settings].
3) Select [VoIP Gateway Setup], and then select [Change Settings].
4) Select a VoIP gateway to register, and then select [Change Settings].
5) Select [ID], and then select [Change Settings].
6) Specify an ID, and then select [Save].
7) Select [Gateway Address], and then select [Change Settings].
8) Specify the IP address of the VoIP gateway, and then select [Save].
9) Select [Save].
10) To configure another VoIP gateway, repeat steps 4 to 9.
11) Select [Close].

3 Select [Close] repeatedly until the [Tools] screen is displayed.

4 Select [Close].

Note

- Rebooting the machine may be required depending on the settings. When a message displayed on the screen, follow the message and reboot the machine.

5 Print a configuration report to confirm that the VoIP gateway settings.

Reference

- For information on how to print a configuration report, refer to "Print Reports" (P.115).

11

Using the Internet Fax Service

Internet Fax Overview

The Internet Fax feature enables the machine to transmit the scanned data as an e-mail attachment using a corporate intranet or the Internet, unlike conventional fax machines which use public phone lines. Also, the machine can receive e-mails transmitted from the Internet Fax-enabled machines.

Note

- An optional component is required depending on the model. For more information, contact our Customer Support Center.

Reference

- For details of the Internet Fax, refer to "Fax" > "About Internet Fax" in the User Guide.

Preparations

This section describes the prerequisites to use the Internet Fax on the machine.

System Requirements for the Machine

- The machine is connected to a network via TCP/IP.
- The environment is prepared for e-mail transmissions.

E-Mail Environment

To use the Internet Fax feature, configure the following settings for your e-mail environment.

Item	Description	Internet Fax		Internet Fax Direct*
		via SMTP	via POP3	via SMTP
TCP/IP address	TCP/IP address of the machine. TCP/IP protocol is used for e-mail transmissions.	O	O	O
Subnet mask	The subnet mask is required when a network is divided into subnetworks.	△	△	△
Gateway address	The gateway address is required when multiple networks are used via gateways.	△	△	△
The machine's e-mail address	Set the machine's e-mail address.	O	O	O
DNS server address	The address is required when the address of POP3 or SMTP server is set not using an IP address but a domain name. The address can be obtained by DHCP.	△	△	△
SMTP server address	SMTP server is used for sending e-mails from the machine. The SMTP server can also be used for receiving e-mails.	O	O	-
SMTP AUTH loginname, password	When a certification-required SMTP server is used, configure a user name for authentication. Set the password as necessary.	△	△	-
POP3 server	Set the POP3 server address.	-	O	-
POP user name	Configure the user name for POP receiving. Set the password as necessary.	-	O	-

O: Required △: Set as required -: Not supported

* : When you use the Internet Fax Direct feature, set [Tools] > [System Settings] > [Fax Service Settings] > [Internet Fax Control] > [Internet Fax Path] to [Direct (P2P)].

Installation Procedures

This section describes the configuration procedures to use the Internet Fax feature on the machine.

"Step 1 Enabling Port and Setting up TCP/IP" (P.394)

"Step 2 Configuring E-mail Environment" (P.395)

"Step 3 Testing the Internet Fax" (P.397)

Step 1 Enabling Port and Setting up TCP/IP

To use the Internet Fax feature on the machine, enable the ports for the E-mail feature, and set the IP address. The following shows the configuration procedures on the machine.

Reference

- You can configure the settings using CentreWare Internet Services. For information on how to use CentreWare Internet Services, refer to "Configuring Machine Settings Using CentreWare Internet Services" (P.331).

1 Display the [Tools] screen.

1) Press the <Log In/Out> button.

2) Enter the system administrator's user ID with the numeric keypad or the keyboard displayed on the screen, and select [Enter].
When a passcode is required, select [Next] and enter the system administrator's passcode, and select [Enter].

Note

- The default user ID is "11111".
- The default passcode is "x-admin".

3) Select [Tools] on the Services Home screen.

2 Enable ports to use for the E-mail feature.

1) Select [Connectivity & Network Setup].

2) Select [Port Settings].

3) Select [Receive E-mail], and then select [Change Settings].

4) Select [Port Status], and then select [Change Settings].

5) Select [Enabled], and then select [Save].

6) Select [Close].

7) Select [Enabled] for [Send E-mail - Port Status] on the [Send E-mail] screen as described above.

8) Select [Close] repeatedly until the [Tools] screen is displayed.

3 Set an IP address and the other addresses.
Skip this step if an IP address is already set. If DHCP or BOOTP is available in your environment, configure the method for obtaining the address. If an IP address cannot be

obtained automatically, or if manual configuration is preferred, confirm the settings of an IP address, a subnet mask, and a gateway address.

Reference

- For information on how to set an IP address, refer to "Protocol Settings" (P.200).

4 Select [Close] repeatedly until the [Tools] screen is displayed.

5 Select [Close].

Note

- Rebooting the machine may be required depending on the settings. When a message displayed on the screen, follow the message and reboot the machine.

6 Print a configuration report to confirm that the ports are enabled and that TCP/IP is set up correctly.

Reference

- For information on how to print a Configuration Report, refer to "Print Reports" (P.115).

Step 2 Configuring E-mail Environment

The following describes the configuration procedures to use the E-mail features.

Reference

- You can configure the settings using CentreWare Internet Services. For the items that can be configured using CentreWare Internet Services, refer to "CentreWare Internet Services Setting Items" (P.358).
- For information on how to start CentreWare Internet Services, refer to "Starting CentreWare Internet Services" (P.330).

1 Display the [Tools] screen.

1) Press the <Log In/Out> button.

2) Enter the system administrator's user ID with the numeric keypad or the keyboard displayed on the screen, and select [Enter].
When a passcode is required, select [Next] and enter the system administrator's passcode, and select [Enter].

Note

- The default user ID is "11111".
- The default passcode is "x-admin".

3) Select [Tools] on the Services Home screen.

2 Set up the e-mail address of the machine.

1) Select [Connectivity & Network Setup].

2) Select [Machine's E-mail Address/Host Name], and then set the items.

Note

- For information on how to set an e-mail address, refer to "Machine’s E-mail Address/Host Name" (P.205)".

3) Select [Close] repeatedly until the [Tools] screen is displayed.

3 Set up the protocol to receive e-mails.

1) Select [Connectivity & Network Setup].

2) Select [Other Settings].

3) Select [Protocol to Receive E-mail], and then select [Change Settings].

4) Select either [SMTP] or [POP3] as appropriate for your environment.

5) Select [Save].

6) Select [Close] repeatedly until the [Tools] screen is displayed.

4 Configure the server settings for receiving e-mails.

1) Select [Connectivity & Network Setup].

2) Select [Outgoing/Incoming E-mail Settings].

■When [SMTP] is selected for [Protocol to Receive E-mail]

Configure the SMTP server.

Reference

- For information on how to configure the SMTP server, refer to "SMTP Server Settings" (P.213).
- For information on how to set the machine's e-mail address when you receive e-mails via SMTP, refer to "Machine's E-mail Address/Host Name" (P.205)".

■When [POP3] is selected for [Protocol to Receive E-mail]

Configure the POP3 server.

Reference

- For information on how to configure the POP3 server, refer to "POP3 Server Settings" (P.213).
- For information on how to set the machine's e-mail address when you receive e-mails via POP3, refer to "Machine's E-mail Address/Host Name" (P.205).

Important

- When you enable POP over SSL in the POP3 Server Setting, receiving e-mail will be encrypted. POP over SSL can be set using CentreWare Internet Services. For information on the setting procedure, refer to "Configuring Machine Settings Using CentreWare Internet Services" (P.331).

5 Configure the server settings for sending e-mails.

Note

- To send e-mails, SMTP server settings are required. When [POP3] is selected in [Protocol to Receive E-mail], configure the SMTP server in [Outgoing/Incoming E-mail Settings].

Reference

- For information on how to configure the e-mail transmission, refer to "SMTP Server Settings" (P.213).

6 Configure the domain filtering for sending and receiving e-mails as necessary.

Reference

- For information on how to configure the domain filtering, refer to "Domain Filtering" (P.226).

7 Set up the S/MIME information.

1) Select [Connectivity & Network Setup].

2) Select [Security Settings].

3) Select [S/MIME Settings], and then set the items.

Reference

- For more information on how to configure S/MIME settings, refer to S/MIME Settings(P.221).

8 Select [Close] repeatedly until the [Tools] screen is displayed.

9 Select [Close].

Note

- Rebooting the machine may be required depending on the settings. When a message displayed on the screen, follow the message and reboot the machine.

10 After the machine reboots, you can print a configuration report to confirm the settings of each item.

Reference

- For information on how to print a configuration report, refer to "Print Reports" (P.115)".

Step 3 Testing the Internet Fax

Test the Internet fax transmission from the machine.

1 Select [Fax/Internet Fax] on the Services Home screen to display the [Fax/Internet Fax] screen.

2 Select [Internet Fax] from the drop-down menu.

3 Enter a destination address.

4 Press the <Start> button to transmit.

5 Check whether the computer received the e-mail.

Reference

- If the computer cannot receive the e-mail, refer to "Problem Solving" (P.451).

12

Using the Server Fax Service

Server Fax Overview

If your machine supports the Scan feature, installing the Server Fax Kit (optional) allows you to use the Fax feature of a Server Fax server.

With the Server Fax feature, you can transfer image data received by the machine to the Server Fax server, and can transfer image data received by the Server Fax server to the machine via a network based on the settings you made.

Important

- While the Server Fax feature is enabled, the Fax feature is detected as "not installed" even if the Fax Kit 3 is installed on the machine. During that time, therefore, fax transmission and reception are disabled and printed reports show that the machine does not support the Fax feature.

Note

- This feature does not appear for some models. For such models, an optional component is required. For more information, contact our Customer Support Center.
- The Server Fax service cannot be used together with the Fax, the IP Fax (SIP), or the Internet Fax service.

Preparations

The following describes the conditions necessary to use Server Fax on the machine.

System Requirements for the Machine

- Scanner Kit needs to be installed on the machine.
- Server Fax Kit needs to be installed on the machine.
- The machine needs to be connected to a network and needs to support TCP/IP communication.
- Server Fax server needs to be installed on the network.

Installation Procedure

Installation Overview

This section describes the configuration procedure to use the Server Fax feature on the machine.

The following shows the reference section for the configuration procedures.

"Step 1 Fax Settings" (P.402)

"Step 2 Setting the Server Fax Feature" (P.403)

Step 1 Fax Settings

If your machine does not support the Fax feature and supports the Server Fax feature only, the Server Fax feature will be enabled automatically. If your machine supports both the Fax and Server Fax features, manually switch to the Server Fax feature.

The following procedure explains how to switch to the Server Fax feature on CentreWare Internet Services.

Reference

- For information on how to use CentreWare Internet Services, refer to "Configuring Machine Settings Using CentreWare Internet Services" (P.331)".

Note

- You can switch to the Server Fax feature also on the machine's control panel.

1. Start a web browser.

2. Enter the machine's IP address or the Internet address into the address box on the browser, and then press the <Enter> key.

   - Example of the IP address entry

     http://192.0.2.1/ (IPv4)

     http://[2001:DB8::1234] (IPv6)

   - Example of the Internet address entry

     http://myhost.example.com/

   Note

   - When specifying a port number, add ":" and the port number to the end of the Internet address.

3. Click the [Properties] tab.

4. Click [Services] to display the items in the folder.

5. Click [Fax] to display the items in the folder.

6. Click [Fax Settings].

7. On the [Fax Settings] screen, select [Scan to Fax Server] under [Fax Service].

8. Set the values as the machine's setting values.

   1) Click [Apply].

2) The right frame on the web browser will change to the machine reboot display.

3) Click [Reboot Machine]. The machine reboots and the setting values are enabled.

Step 2 Setting the Server Fax Feature

Enable the Server Fax feature and set the file destination. The following procedure explains how to set them on CentreWare Internet Services.

Reference

- For more information on how to use CentreWare Internet Services, refer to "Configuring Machine Settings Using CentreWare Internet Services" (P.331).

1 Start a web browser.

2 Enter the machine's IP address or the Internet address to the address box on the browser, and then press the <Enter> key.

- Example of the IP address entry

  http://192.0.2.1/ (IPv4)

  http://[2001:DB8::1234] (IPv6)

- Example of the Internet address entry

  http://myhost.example.com/

Note

- When specifying a port number, add ":" and the port number to the end of the Internet address.

3 Click the [Properties] tab.

4 Click [Services] to display the items in the folder.

5 Click [Fax] to display the items in the folder.

6 On the tree in the left frame, click [General].

7 On the [General] screen, click [Edit].

8 Set Optional Information such as [Job log] and [Confirmation Sheet].

9 Click [Apply] to enable the settings.

10 On the tree in the left frame, click [Fax Repository Setup].

11 On the [Fax Repository Setup] screen, select a protocol first and then set the items under [Fax Destination].

Note

- When [FTP] or [SMB] is selected, faxes will be sent to the destination specified under [File Destination]. When [SMTP] is selected, faxes will be sent to the destination specified in the E-mail settings.

Reference

- For more information on this setting, refer to the help of CentreWare Internet Services.

Important

- To display the online help for CentreWare Internet Services, users need to have the environment to connect to the internet. The communication fee shall be borne by you.

■When [FTP] or [SMB] is selected

Set the repository server that is to be used for the Server Fax feature.

- IP Address/Host Name and Port (If the port number is blank, the default port number (FTP:21 or SMB:139) will be used.)
- Share (SMB only)
- Document Path
- Login Name
- Password
- Retype Password

■When [SMTP] is selected

The SMTP server settings are the same as the E-mail settings.

Reference

- For more information on the SMTP server settings, refer to "Step 2 Configuring E-mail Environment" (P.356).

The following settings are additionally required for the SMTP server.

- Domain Name
- E-mail Address Display Format

12 Click [Apply] to enable the settings.

Reference

- For more information on how to print a settings list, refer to "Print Reports" (P.115).

13

Encryption and Digital Signature Settings

Encryption and Digital Signature Overview

Types of Certificate

To use the Encryption feature and the Signature feature on the machine, a certificate is required.

The following two types of device certificate can be used on the machine:

- A certificate issued by another CA

  When you use a certificate issued by another CA, import the certificate using CentreWare Internet Services.

Note

- When you use a certificate issued by another CA, import the certificates of all the CAs included in the path of the certificate to be used.

The certificates meeting the following standards can be imported.

- X.509 Certificate (DER/PEM) (except for device certificates)
- PKCS#7 (DER) (except for device certificates)
- PKCS#12 (DER) (device certificates)

Reference

- For more information on how to import a certificate, refer to the help of CentreWare Internet Services.

The following shows the device certificates corresponding to the types of encryption, certificate conditions that can be set according to the types of encryption, and how to check the certificate settings on Windows.

Device certificates corresponding to the types of encryption

	Self-Signed Certificate	Certificate Issued by Another CA
Encrypting HTTP communicationsfrom a client to the machine(SSL/TLS server)	O	O
Encrypting HTTP communications from the machine to a remote server (SSL/TLS client)	X	O
Encryption using IPsec	X	Δ*1
E-mail encryption/digital signature	X	O
PDF signature/DocuWorks signature/ XPS*2 signature	O	O

O: Available

Δ: Set as necessary

X: Not available

*1 : Available when [IKE Authentication Method] is set to [Authenticate by Digital Signature].
*2 : XPS stands for XML Paper Specification.

Certificate conditions that can be set according to the types of encryption

	Key usage (Only when this item is included in the V3 extended area)		Extended key usage (Only when this item isincluded in the V3 extended area)			Mail address
	Key encryption	Digital signature	Server Authenticaion	Client authentication	E-mail protection	
Encryption on HTTP communication fromthe client to the machine (SSL/TLSserver)	O	O	O	X	X	X
Encryption on HTTP communication from the machine to an remote server (SSL/TLS client)	O	O	X	O	X	X
Encryption usingIPsec	X	O	X	X	X	X

How to check the certificate settings on Windows

To check the certificate settings, open the certificate file and check the fields on the [Details] tab against the following.

Key encryption	[Key usage] includes "Key Encipherment".
Digital Signature	[Key usage] includes "Digital Signature".
Server Authentication	[Extended key usage] includes "Server Authentication".
Client Authentication	[Extended key usage] includes "Client Authentication".
E-mail Protection	[Extended key usage] includes "E-mail Protection".
Mail Address	[Subject] includes "E=(E-mail address)", or [Subject alternative name] includes "RFC822 Name=(E-mail address)".

Certificate Conditions

Valid certificates can only be used. To check the certificate conditions, check [Properties] >[Security] > [Certificate Management] > [Certificate Details] > [Validity].

Validity	Status	Cause	Remedy
Valid	The certificate is valid.	X	X
Valid (certificate expires soon)	The certificate is valid, but expires within 1 month.	X	X

Validity	Status	Cause	Remedy
Invalid (before validity starts)	The valid period of the certificate is not started.	The validation period of the certificate is before the time of the machine.	Check the time when the valid period of the certificate starts. Also check if the time of the machine is correctly set.*
Invalid (validity expires)	The certificate expired.	The validation period of the certificate is after the time of the machine.	Check the time when the valid period of the certificate ends. Also check if the time of the machine is correctly set.*
Certificate issuerunknown.	The certificate path is not completed.	A CA certificate necessary to configure the certificate path is not imported.	Import all the CA certificates of the CAs included in the certificate path.

* : For Windows, open the certificate file and check [Valid From] on the [Advanced] tab.

Encryption Features for Communication

The data sent between the machine and computers on a network can be encrypted.

Encrypting HTTP Communications from a Client to the Machine (SSL/TLS Server)

The SSL/TLS protocol is used to encrypt the HTTP communications between a client and the machine.

Note

- If the certificate for the SSL server contains the V3 extension "keyUsage", "digitalSignature" must be asserted. Refer to "How to check the certificate settings on Windows" (P.407).

Reference

- For information on the setting procedure, refer to "Configuration of HTTP Communications Encryption" (P.410).

Encrypting HTTP Communications from the Machine to a Remote Server(SSL/TLS Client)

The SSL/TLS protocol is used to encrypt the HTTP communications between a remote server and the machine. No certificate is required in general. However, if a remote server is set to require an SSL client certificate, you can use a certificate issued by another CA. When verification of server certificates is enabled to verify the SSL/TLS certificate of a remote server, import a certificate issued by another CA using CentreWare Internet Services to the machine.

When verifying a SSL/TLS server certificate of a remote server with the verification of the server certificate enabled, import the certificate of the CA included in the higher level of the certificate path to the machine using CentreWare Internet Services.

Note

- If the certificate for the SSL client contains the V3 extension "keyUsage", "digitalSignature" must be asserted. For information on how to check it on Windows, refer to "How to check the certificate settings on Windows" (P.407).

Encryption using IPsec

IPSec enables IP-level (not application-level) encrypted communications with remote devices.

If you select [Authenticate by Preshared Key], no device certificate is required.

Reference

- For information on IKE authentication methods, refer to "IPsec Settings" (P.223).

To verify the certificate of the remote device, you must register a root certificate created by a CA of the remote device on the machine.

Note

- To use certificates that have already been created, import them with CentreWare Internet Services.

Encryption and Digital-Signature Features for Scan Files

Encrypting PDF/DocuWorks Documents

PDF and DocuWorks documents can be encrypted and protected by a password.

Reference

- For information on how to encrypt PDF and DocuWorks documents, refer to "Scan" > "E-mail" > "File Format (Selecting a File Format for Output Data)" in the User Guide.

Encryption/Digital Signature of PDF/DocuWorks/XPS Documents

Digital signatures are available for PDF, DocuWorks, and XPS documents.

To use the digital signature, a device certificate is required.

For a device certificate, you can use any registered certificates.

Reference

- For information on the setting procedure, refer to "Configuration of PDF/DocuWorks/XPS Signature" (P.420).

Configuration of HTTP Communications Encryption

This section describes the settings to encrypt HTTP communications.

"Installation Overview" (P.410)

"Step1 Configuration on the Machine" (P.410)

"Step2 Configuration on the Computer" (P.412)

Installation Overview

To encrypt HTTP communications, configure the machine and your computer as follows:

Configuration on the Machine

Configure a certificate on the machine. No certificate is registered on the machine by factory default. Configure certificates for an SSL server as needed.

- Configuring certificates by CentreWare Internet Services

  The following two methods are available depending on types of certificates.

  - Create a self-signed certificate on the machine, and then enable HTTPS.
  - Enable HTTPS, and then import a certificate issued by another CA to the machine.

Configuration on the Computer

To encrypt communications between a web browser and the machine, enter an address beginning with "https" instead of "http" into the address box of the web browser.

Step1 Configuration on the Machine

Configure a certificate on the machine. No certificate is registered to the machine by factory default. Configure certificates for an SSL server as needed.

The following describes the procedures to set up a certificate by CentreWare Internet Services.

Setting up a Certificate using CentreWare Internet Services

To set up a certificate using CentreWare Internet Services, you can have the machine create a self-signed certificate for SSL server or can import any registered certificate (issued by another CA) to the machine.

Reference

- For information on how to import a registered certificate, click [Help] at the upper right corner of the CentreWare Internet Services screen to see help.

Important

- To display the online help for CentreWare Internet Services, users need to have the environment to connect to the internet. The communication fee shall be borne by you.
- When performing SSL communications using a self-signed certificate created on the machine, or a certificate with which the character code is encoded with UTF-8, you will not be able to connect with SSL if Internet Explorer is used with Mac OS X v10.2 or later. This is because the operating system cannot recognize the character code (UTF-8) of the certificate. Use Netscape 7 in the above-mentioned OS environments.
- You cannot import a certificate that has been already registered in [Local Device] or [Others]. Delete the registered certificate before importing.

■ How to create the self-signed certificate (for SSL server)

1 Start CentreWare Internet Services.

Reference

- For more information on how to start CentreWare Internet Service, refer to "Starting CentreWare Internet Services" (P.330).

2 Create a certificate.

1) Click the [Properties] tab.
2) Click [Security] to display the items in the folder.
3) Click [Machine Digital Certificate Management].
4) Click the [Create New Certificate] button.
5) Select [Self-Signed Certificate] and then click the [Continue] button.
6) Set [Digital Signature Algorithm] as necessary.
7) Set [Public Key Size] as necessary.
8) Set [Issuer] as necessary.
9) Set [Days of Validity] as necessary.
10) Click [Apply].
11) Refresh the web browser.

3 Set up the SSL/TLS information.

1) Click [Security] to display the items in the folder.
2) Click [SSL/TLS Settings].
3) Select the [Enabled] check box for [HTTP - SSL/TLS Communication].

Important

- The check box can be selected only when the certificate for the SSL server is correctly set. When the check box cannot be selected, check [Properties] > [Security] > [Certificate Settings], and make the correct settings for the certificate for the SSL server.

4) Set up [HTTP - SSL/TLS Communication Port Number].

Important

- Do not use the numbers of any other ports.

5) Click [Apply]
6) When the right frame of the web browser changes to the machine reboot display, click [Reboot Machine]. The machine reboots and the settings are enabled.

■ How to import the certificate issued by another CA

Before importing the certificate issued by another CA, create the self-signed certificate and make the settings so that HTTP communication is encrypted.

1 Start CentreWare Internet Services.

Reference

- For more information on how to start CentreWare Internet Service, refer to "Starting CentreWare Internet Services" (P.330).

2 Import a certificate.

Important

- You cannot import a certificate that has been already registered in [Local Device] or [Others]. Delete the registered certificate before importing.
- If the certificate to be imported contains the V3 extension "keyUsage", "digitalSignature" must be asserted.

1) Click the [Properties] tab.
2) Click [Security] to display the items in the folder.
3) Click [Machine Digital Certificate Management].
4) Click [Upload Signed Certificate].
5) Enter [Password].
6) Enter [Retype Password].
7) Enter a file name you want to import or select a file to import from a dialog box displayed by clicking the [Browse] button, and then select [Save].
8) Click the [Import] button.
9) Refresh the web browser.

3 Configure the certificate.

1) Click [Security].
2) Click [Certificate Management].
3) Select [Local Device] for [Category] and [IPsec] for [Certificate Purpose], and then click the [Display the list] button.
4) Select the check box next to the certificate to set.
5) Click the [Certificate Details] button.
6) Click the [Use this certificate] button.
7) Click [Reboot Machine]. The machine reboots and the settings are enabled.

Step2 Configuration on the Computer

To encrypt communications between a web browser and the machine, enter an address beginning with "https" instead of "http" in the address box of the web browser.

- Example of IP address entry:

  https://192.0.2.1/ (IPv4)

  https://[2001:DB8::1234]/ (IPv6)
- Example of Internet address entry:

  https://myhost.example.com/

Configuration of Encryption using IPsec

This section describes how to encrypt communications using IPsec.

When the IKE authentication method is set to [Authenticate by Preshared Key], skip step 1 "Import and Configuration of a Certificate" and go to step 2 "Configuration on the Machine (Configuration of IPsec)".

Reference

- For IKE authentication methods, refer to "IPsec Settings" (P.223).

Installation Overview(P.413)

"Step1 Import and Configuration of a Certificate" (P.413)

"Step2 Configuration on the Machine (Configuration of IPsec)" (P.414)

"Step3 Configuration on the Computer" (P.415)

Installation Overview

To encrypt communications using IPsec, configure the machine and your computer as follows:

Configuration on the Machine

When [IKE Authentication Method] is set to [Authenticate by Digital Signature], configure a certificate on the machine. No certificate is registered on the machine by factory default. After importing a certificate, configure IPsec.

Configure the following setting to set up a certificate on the machine.

- Configuring certificates by CentreWare Internet Services
  - Enable HTTPS, and then import a certificate issued by another CA to the machine.

Note

- If a certificate to be imported as an IPsec certificate contains V3 extension "KeyUsage", "digitalSignature" bit must be asserted.

Configuration on the Computer

Configure the following settings to encrypt communications between a computer and the machine.

- Create an IP security policy
- Assign the IP security policy

Step1 Import and Configuration of a Certificate

The following describes configuration procedures to set up a certificate with CentreWare Internet Services.

To configure a certificate using CentreWare Internet Services, configure the encryption settings for HTTP communications, and then import a certificate issued by another CA to use it for the IPsec certificate.

Reference

- For details on how to configure the encryption settings for HTTP communication, refer to "Configuration of HTTP Communications Encryption" (P.410).

1 Start CentreWare Internet Services.

Reference

- For more information on how to start CentreWare Internet Service, refer to "Starting CentreWare Internet Services" (P.330).

2 Import a certificate.

Important

- You cannot import a certificate that has been already registered in [Local Device] or [Others]. Delete the registered certificate before importing.
- If the certificate to be imported contains the V3 extension "keyUsage", "digitalSignature" must be asserted. For information on how to check it on Windows, refer to "How to check the certificate settings on Windows" (P.407).

1) Click the [Properties] tab.
2) Click [Security] to display the items in the folder.
3) Click [Machine Digital Certificate Management].
4) Click [Upload Signed Certificate].
5) Enter the password of the certificate for [Password].
6) Enter [Password].
7) Enter [Retype Password].
8) Enter a file name you want to import or select a file to import from a dialog box displayed by clicking the [Browse] button, and then select [Save].
9) Click the [Import] button.
10) Refresh the web browser.

3 Configure the certificate.

1) Click [Security].
2) Click [Certificate Management].
3) Select [Local Device] for [Category] and [IPsec] for [Certificate Purpose], and then click the [Display the list] button.
4) Select the check box next to the certificate to set.
5) Click the [Certificate Details] button.
6) Click the [Use this certificate] button.
7) Click [Reboot Machine]. The machine reboots and the settings are enabled.

Step2 Configuration on the Machine (Configuration of IPsec)

The following describes configuration procedures to set up IPsec on the machine.

1 Press the <Log In/Out> button.

2 Enter the system administrator's user ID with the numeric keypad or the keyboard displayed on the screen, and select [Enter].

When a passcode is required, select [Next] and enter the system administrator's passcode, and select [Enter].

Note

- The default user ID is "11111".
- The default passcode is "x-admin".

3 Select [Tools] on the Services Home screen.

4 Select [Connectivity & Network Setup].

5 Select [Security Settings].

6 Select [IPsec Settings].

7 Configure the required settings.

Reference

- For details on the settings, refer to "IPsec Settings" (P.223).

8 Select [Close].

Step3 Configuration on the Computer

The following describes the configuration procedures on the computer.

Configure the following settings on the computer.

- Create an IP security policy
- Assign the IP security policy

Reference

- For details on the settings, refer to the help of the computer.

Configuration of E-mail Encryption/Digital Signature

This section describes how to encrypt e-mails and how to attach a digital signature to e-mails.

"Installation Overview" (P.416)

"Step1 Configuration on the Machine" (P.417)

"Step2 Configuration on Sender and Recipient" (P.417)

Installation Overview

To encrypt e-mails and attach a digital signature, configure the machine and your computer as follows:

Note

- To encrypt e-mails and attach a digital signature to e-mails between the machine and a computer, a personal or device certificate for S/MIME of a recipient and the device certificate of the machine must be set on the computer. To configure the digital signature, the device certificate of the machine is necessary. Configure the following settings to the certificates.
  - "e-mail address"
  - If the certificate contains V3 extension "keyUsage", "digitalSignature" and "keyEncipherment" must be asserted.
  - If the certificate contains V3 extension "extendedKeyUsage", "emailProtection" must be set.
- Up to 100 addresses can be encrypted with S/MIME.
- For information on how to check it on Windows, refer to "How to check the certificate settings on Windows" (P.407).

Configuration on the Machine

Set the certificate on the machine and enable the S/MIME communication.

Configure a certificate on the machine. No certificate is registered on the machine by factory default.

Configure the following settings to set up a certificate on the machine.

- Configuring certificates by CentreWare Internet Services

  - Set up HTTPS communications encryption settings, and then configure a certificate on the machine.

Configuration on Sender and Recipient

To transmit e-mails encrypted by S/MIME and with digital signatures attached, register the required certificate on equipment of a sender and a recipient.

The following shows the certificate settings necessary to encryption and digital signature.

Source	Destination	Encryption	Digital Signature
		Certificate to beregistered to the source	Certificate to beregistered to thedestination
The machine	Computer	Personal certificate of thecomputer	Device certificate for S/MIMEof the machine
	Another machine	Device certificate for S/MIMEof another machine	Device certificate for S/MIMEof the machine
Computer	The machine	Device certificate for S/MIMEof the machine	Personal certificate of thecomputer

Step1 Configuration on the Machine

This section describes configuration procedures to set up a certificate with CentreWare Internet Services.

Note

- You cannot use a self-signed certificate created with CentreWare Internet Services for S/MIME.

Step2 Configuration on Sender and Recipient

To transmit e-mails encrypted or with digital signature attached, a device certificate and a personal certificate must be registered with each machine.

This section describes certificates required for destination and source, and registration procedures.

Reference

- For information on the settings necessary to encryption and digital signature, refer to the table in Configuration on Sender and Recipient(P.417).

Note

- Required certificates include a trusted root certificate authority and all intermediate certificate authorities that are registered in the path of a certificate to use.

When source is the machine and destination is a computer

The personal certificate of a computer must be registered on the machine. And the device certificate of the machine must be registered on a computer.

To register the computer's personal certificate, use CentreWare Internet Services.

There are two methods to register the machine's device certificate to a computer:

- Send an e-mail with S/MIME digital signature to a computer from the machine andregister it to the certificate store of an e-mail application in the computer.

  To send an e-mail with S/MIME digital signature, select [Always add signature] or[Select during send] for [Digital Signature - Outgoing E-mail] under [Tools] > [System Settings] > [Connectivity & Network Setup] > [Security Settings] > [S/MIME Settings] in advance.

- Export the certificate of the machine to a computer using CentreWare InternetServices, and register it to the certificate store of an e-mail application in the computer.

Reference

- For information on how to import and export a certificate using CentreWare Internet Services, refer to "Importing/exporting a certificate using CentreWare Internet Services" (P.419) or the help of CentreWare Internet Services.
- For information on how to register a certificate to the certificate store of an e-mail application, refer to the manual of your e-mail software.

When source is the machine and destination is another multifunctional machine

The device certificate of another multifunctional machine must be registered on the machine. And the device certificate of the machine must be registered on another multifunctional machine.

To register the device certificate of another multifunctional machine, start CentreWare Internet Services of another multifunctional machine from a computer and export the certificate to the computer. And then, start CentreWare Internet Services of the machine and import the certificate.

To register the device certificate of the machine, perform the same procedure as described above.

Reference

- For information on how to import and export a certificate using CentreWare Internet Services, refer to "Importing/exporting a certificate using CentreWare Internet Services" (P.419) or the help of CentreWare Internet Services.

Important

- To display the online help for CentreWare Internet Services, users need to have the environment to connect to the internet. The communication fee shall be borne by you.

When source is a computer and destination is the machine

The device certificate of the machine must be registered on a computer. The registration of the personal certificate of a computer to the machine is not required.

There are two methods to register the machine's device certificate to a computer:

- Send an e-mail with S/MIME digital signature to a computer from the machine (or another multifunctional machine) and register it to the certificate store of an e-mail application in the computer.

  To send an e-mail with S/MIME digital signature, select [Always add signature] or [Select during send] for [Digital Signature - Outgoing E-mail] under [Tools] > [System Settings] > [Connectivity & Network Setup] > [Security Settings] > [S/MIME Settings] in advance.

- Export the certificate of the machine to a computer using CentreWare Internet Services, and register it to the certificate store of an e-mail application in the computer.

Reference

- For information on how to import and export a certificate using CentreWare Internet Services, refer to "Importing/exporting a certificate using CentreWare Internet Services" (P.419) or the help of CentreWare Internet Services.

Important

- To display the online help for CentreWare Internet Services, users need to have the environment to connect to the internet. The communication fee shall be borne by you.

Reference

- For information on how to register a certificate to the certificate store of e-mail software, refer to the manual of your e-mail application.

The following e-mail applications can transmit e-mails between the machine and acomputer:

- Windows Vista®, Windows® 7:Microsoft® Office Outlook® 2007, Microsoft® Outlook® 2010
- Windows® 8:Microsoft® Outlook® 2010
- Mac OS X:Mail 2.1.1

Importing/exporting a certificate using CentreWare Internet Services

To import a certificate, select the [Properties] tab > [Security] > [Machine Digital Certificate Management] > [Upload Signed Certificate].

To export a certificate, select the [Properties] tab > [Security] > [Certificate Management] and select a certificate to export, and then click the [Export this certificate] button.

Reference

- For information on how to import and export a certificate, refer to the help of CentreWare Internet Services.

Configuration of PDF/DocuWorks/XPS Signature

This section describes the settings to send scanned documents in PDF, DocuWorks, or XPS format with a digital signature (PDF, DocuWorks, or XPS) attached.

Note
- XPS stands for XML Paper Specification.

"Installation Overview" (P.420)

"Step1 Configuration on the Machine" (P.420)

"Step2 Configuration on the Computer" (P.422)

Installation Overview

To attach a signature (PDF signature/DocuWorks signature/XPS signature) to a scanned document to send as a PDF, DocuWorks, or XPS document, configure the machine and your computer as follows:

Note
- XPS stands for XML Paper Specification.

Configuration on the Machine

Configure a certificate on the machine. No certificate is registered on the machine by factory default.

Configure the following setting to set up a certificate on the machine.

- Configuring certificates by CentreWare Internet Services

  Set up HTTPS communications encryption settings, and then configure a certificate on the machine.

Configuration on the Computer

- Sending a DocuWorks security certificate file from the machine to a computer

  You must register a personal certificate as the destination on the machine, and then register the certificate on the Address Book. When you register a personal certificate on the machine, include the root certificate in the personal certificate.

Important
- o display the online help for CentreWare Internet Services, users need to have the environment to connect to the Internet. The communication fee shall be borne by you.

- Sending a PDF, DocuWorks, or XPS signature file from the machine to a computer

  Make sure that the root certificate of the certificate to be used for the scan file signature of the machine is registered on the recipient's computer.

Step1 Configuration on the Machine

This section describes configuration procedures to set up a certificate with CentreWare Internet Services.

Setting up a Certificate using CentreWare Internet Services

To configure a certificate using CentreWare Internet Services, configure the encryption settings for HTTP communications, and then import a certificate issued by another CA to enable S/MIME.

Reference

- For details on how to configure the encryption settings for HTTP communication, refer to "Configuration of HTTP Communications Encryption" (P.410).

1 Start CentreWare Internet Services.

Reference

- For more information on how to start CentreWare Internet Services, refer to "Starting CentreWare Internet Services" (P.330).

2 Import a certificate.

1) Click the [Properties] tab.
2) Click [Security] to display the items in the folder.
3) Click [Machine Digital Certificate Management].
4) Click [Upload Signed Certificate].
5) Enter the password of the certificate for [Password].
6) Enter [Password].
7) Enter [Retype Password].
8) Enter a file name you want to import or select a file to import from a dialog box displayed by clicking the [Browse] button, and then select [Save].
9) Click the [Import] button.
10) Refresh the web browser.

3 Configure the certificate.

1) Click [Security].
2) Click [Certificate Management].
3) lect [Local Device] for [Category] and [Scan File] for [Certificate Purpose], and then click the [Display the list] button.
4) Select the check box next to the certificate to set.
5) Click the [Certificate Details] button.
6) Click the [Use this certificate] button.
7) Click [Reboot Machine]. The machine reboots and the settings are enabled.

4 Configure the settings for PDF Signature/DocuWorks Signature/XPS Signature.

Note

- XPS stands for XML Paper Specification.

1) Refresh the web browser.

2) Click [Security] to display the items in the folder.

3) Click [PDF/DocuWorks/XPS Security Settings] and configure the following settings.

Important

- The DocuWorks documents with DocuWorks signature are available on the following versions of DocuWorks software.
  - When [SHA-1] is selected: DocuWorks 5.0 or later
  - When [SHA-256] is selected: DocuWorks 8.0 or later

- PDF Signature

  Select the setting for PDF signature from [Do not add signature], [Always add visible signature], [Always add invisible signature], or [Select during send].

- PDF Signature Hash Algorithm

  Select the setting of the hash algorithm when using PDF signature from [SHA-1] or [SHA-256].

- DocuWorks Signature

  Select the setting for DocuWorks signature from [Do not add signature], [Always add signature], or [Select during send].

- DocuWorks Signature Hash Algorithm

  Select the setting of the hash algorithm when using DocuWorks signature from [SHA-1] or [SHA-256].

- XPS Signature

  Select the setting for XPS signature from [Do not add signature], [Always add signature], or [Select during send].

4) Click [Apply].

Step2 Configuration on the Computer

- Sending a DocuWorks security certificate file from the machine to a computer

  You must register a personal certificate as the destination on the machine, and then register the certificate on the Address Book. When you register a personal certificate on the machine, include the root certificate in the personal certificate.

Reference

- For information on how to register (import) a certificate, click [Help] at the upper right corner of the CentreWare Internet Services screen to see help.

Important

- To display the online help for CentreWare Internet Services, users need to have the environment to connect to the Internet. The communication fee shall be borne by you.

- Sending a PDF, DocuWorks, or XPS signature file from the machine to a computer

  Make sure that the root certificate of the certificate to be used for the scan file signature of the machine is registered on the recipient's computer.

Note

- XPS stands for XML Paper Specification.

14

Authentication and Accounting Features

Overview of Authentication and Accounting Feature

This section overviews the authentication feature and the accounting feature.

Using authentication feature allows you to restrict the access to the machine, restrict the use of each service, and count the use of services per user.

"Types of User" (P.424)

"User Roles and Authorization Groups" (P.424)

"Access Control" (P.426)

"Types of Authentication" (P.426)

"Account Administration" (P.428)

Types of User

When the authentication feature is enabled, users are classified into the following three types.

Note

- When the authentication feature is disabled, users are classified as either system administrator or local user.

■ System Administrator

The system administrator can register and change system settings to adapt to the environment to be used.

A system administrator uses a specific user ID called a system administrator's user ID.

■ Login User

A login user is a user registered on the machine or a remote server. To use restricted services, enter the user ID and passcode on the screen.

A user ID of a login user can be associated with some sub users in accordance with the intended use.

Note

- An optional component is required to use the sub user feature. For more information, contact our Customer Support Center.

■ Unregistered User

An unregistered user is a user not registered on the machine.

An unregistered user cannot use restricted services.

User Roles and Authorization Groups

You can select a user role and an authorization group for each user.

For a user registered on a remote server, these settings are effective only when LDAP is used. When using LDAP, configure the settings on CentreWare Internet Services.

Important

- When [Login Type] is set to [Login to Local Accounts] and [Accounting Type] is set to [Network Accounting], an authorization group cannot be assigned to a user. Therefore, the features configured for the authorization group, such as the feature to temporarily disable forcible printing, are not available.

User Roles

Set the scope of administration authority for each login user. The authority of system administrator or account administrator can be given to a specified login user.

■ System Administrator

The same authority as a system administrator is given except for the following operations:

- Operate folders
- Operate job flows sheets
- Change the passcode of the system administrator

■ Account Administrator

The following authorities are given:

- Create, delete, change (except for passcode), and view (unavailable depending on some settings) user information
- Create, delete, change, and view accounting
- Change Alternative Name for Account ID or Mask Account ID
- Print an Auditron Report for each user

Authorization Groups

Create groups according to the operation authority of the following restrictions and assign login users to them. The login users assigned to the authorization groups can operate the machine in the same way as system administrator.

Reference

- For details on authorization groups, refer to "Create Authorization Groups" (P.317).

■ Restrict Recipient Selection Method

Allows you to set whether or not to permit the group members to specify recipients when [Restrict Recipient Selection Method] is set to [Only From Address Book].

Reference

- For details on the Restrict Recipient Selection Method setting, refer to "Restrict Recipient Selection Method" (P.180).

■ Restrict User to Edit Address Book

Allows you to set whether or not to permit the group members to edit the Address Book in the machine when editing the Address Book is prohibited.

Reference

- For details on the Restrict User to Edit Address Book setting, refer to "Restrict User to Edit Address Book" (P.180).

■ Allow User to Disable Active Settings

Allows you to set whether or not to permit the group members to disable active settings, such as Force Watermark and Print Universal Unique ID, and perform a job. This setting enables users belonging to an authorization group to disable active settings from [Tools] on the Services Home screen.

Reference

- For details on the Watermark and UUID settings, refer to "Watermark" (P.170) and "Print Universal Unique ID" (P.174).
- For information on how to temporarily disable active settings, refer to "Allow User to Disable Active Settings" (P.324).

Access Control

Allows you to restrict the operation of the machine.

Account Limit for All User

When using authentication mode, you can restrict the access to the machine and the use of each service. The user authentication is required to use this feature.

Note

- For more information, refer to "Access Control" (P.315).

■ Device Access

Allows you to prohibit the operation of buttons on the control panel.

■ Service Access

Allows you to configure whether or not to restrict the use of each service such as Copy, Fax, and Scan.

■ Feature Access

Allows you to restrict making color copies, and printing and retrieving files stored in folders.

Account Limit for Each User

Allows you to restrict access to each service and to set the maximum number of pages allowed for the service per user.

Allows you to restrict creating, editing, and using job flow sheets and folders per user.

Reference

- For more information about the feature, refer to "Services Controlled by Authentication" (P.432) and "Authentication for Job Flow Sheets and Folders" (P.435).

Types of Authentication

The following describes the types of authentication (Login Type) available on the machine.

Authentication is performed using user information registered on the machine or a remote server.

Types of Authenticartion

■ Login to Local Accounts

Login to Local Accounts uses the user information registered on the machine to manage authentication.

Note

- A print job directly sent to the machine from a computer can be received on the machine after being authenticated through cross-checking the authentication information configured on the client's print driver with the information registered on the machine. In this case, depending on the remote authentication system, the domain name needs to be set. Set the domain name from the print driver.

■ Login to Remote Accounts

Authentication is performed for a remote server. User information is not registered on the machine.

Login to Remote Accounts uses the user information registered on a remote authentication server (LDAP, Kerberos, or SMB server) to perform authentication.

Important

- When a user is authenticated by a remote authentication server, the authenticated user can access the services through the control panel based on the permission information obtained from the remote server.
- When you change Login Type to or from [Login to Remote Accounts], user information, private folders, and Personal Sheets registered on the machine will be deleted.
- When you register user information on a remote authentication server, use up to 32 singlebyte characters for a user ID and up to 128 single-byte characters for a password. Note, however, that up to 32 single-byte characters are allowed for an SMB authentication password.

Note

- The user information used for Login to Remote Accounts can be stored on the machine. For more information, refer to "Save remote accounts in this machine" (P.320) and "Delete Remote Accounts" (P.320).

Authentication Methods

■ User ID Authentication

Authentication is performed using user information registered on the machine or a remote server in advance. The users are required to enter their user IDs and passcodes with the numeric keypad or the touch screen of the machine.

■ Smart Card Authentication

Authentication is performed using the card number or user information registered on the smart card. Register such information on the machine or a remote server in advance and use the smart card for authentication.

Note

- Authentication is performed using the smart card, IC Card Reader (optional), IC Card Gate (sold separately). When you connect IC Card Gate to the machine, contact our customer support center. For information about using IC Card Gate, refer to the manual for IC Card Gate.
- For information about setting procedure of authentication with IC Card Reader, refer to "Configuration for IC Card Reader (Optional)" (P.444).
- User ID is registered on the smart card used with IC Card Gate in advance.

■ Combined Use of Smart Card Authentication and User ID Authentication

You can use smart card authentication in combination with user ID authentication. However, when [Login Type] is set to [Login to Local Accounts], you need to enable user ID authentication.

Reference

- For information on how to enable user ID authentication, refer to "When Smart Card Reader is Connected" (P.319).

Account Administration

Types of Account Administration

The following describes the types of account administration (Accounting Type)available on the machine.

Important

- When [Login to Remote Accounts] is set for [Login Type] and [Authentication Agent] is set for [Authentication System], ApeosWare Authentication Management (sold separately) or ApeosWare Authentication Agent (sold separately) automatically becomes an accounting/authentication server.

Note

- Some Accounting Types may be grayed out and not selectable depending on the selected login type. For more information, refer to "Authentication and Accounting Relationship" (P.429).

The Account Administration feature is classified into the following four types:

■ Local Accounting

Local Accounting performs account administration on the machine.

In Local Accounting, account administration is performed for each user using the login users'information registered on the machine.

Note

- Auditron reports can be printed when the login user is a system administrator, a user set to have system administration authority, or a user set to have account administration authority. For printing procedure of the report, refer to "Print Reports" (P.115).

Reference

- For information on the types of jobs that can be monitored , refer to "Jobs Manageable by Account Administration" (P.429).

■ Network Accounting

Network Accounting performs account administration using user information managed by a remote service.

In Network Accounting, the remote server collects job data stored on the machine and counts up the numbers of pages processed for each user.

Note

- User information managed by the remote service is sent to be registered on the machine. When the user information on the remote service is updated, the updated information must be sent from the remote service to the machine.
- The remote services supported by the machine include Device Setup Tool (free software).

■ Accounting using Authentication Server

Account administration is performed using a remote authentication server.

In this accounting, the remote server collects job data stored on the machine and counts up the numbers of pages processed for each user.

Note

- The authentication server manages the user's information and obtains accounting information from a remote server.
  Authentication servers supported by the machine include ApeosWare Authentication Management (sold separately) or ApeosWare Authentication Agent (sold separately).

■ Xerox Standard Accounting

Account administration is performed using the user information and account information registered on the machine. Also, accounting information is counted using various counters

automatically created for each user. Auditron reports are created in CSV format using CentreWare Internet Services.

Reference

- For information on driver settings, refer to the help of the driver.
- For information on the user information settings, account information settings, and how to create a report, refer to the help of CentreWare Internet Services.

Note

- To display the online help for CentreWare Internet Services, users need to have the environment to connect to the Internet. The communication fee shall be borne by you.
- The authentication server manages the user's information and obtains accounting information from a remote server. Authentication servers supported by the machine include ApeosWare Authentication Management (sold separately) or ApeosWare Authentication Agent (sold separately).

Authentication and Accounting Relationship

You can individually select Login and Accounting Types, and can combine them as described in the following table.

		Accounting Types				
		Accounting Disabled	Local Accounting	Network Accounting	Authentication Server	Xerox Standard Accounting
Login Types	No Login Required	O	X	O	X	O
	Login to Local Accounts	X	O	O	X	O
	Login to Remote Accounts	O*	X	X	X	X

O : Available

X : Not available

* : When [Login Type] is [Login to Remote Accounts], [Accounting Type] is automatically set to [Accounting Disabled]. Accounting, however, can be performed with ApeosWare Accounting Services.

Jobs Manageable by Account Administration

This section describes the information that can be managed for the jobs for each service.

■ Print

The following table shows the print jobs and the information that can be managed for each print job.

Services (Jobs)		Target User	Managed Items
Normal Print	Machine's print driver	Login user	Pages/sheets
	Other than machine's print driver	Unregistered user	
Secure Print	Print Files	Login user	
Sample Set			
Print Stored File			
Delayed Print			
Charge Print			
Private Charge Print			
Print E-mail*		Unregistered user	

* : Printing is available only when [Non-account Print] is set to [Enabled] in CentreWare Internet Services.

■ Scan

The following table shows the scan jobs and the information that can be managed for each scan job.

Services (Jobs)	Target User	Managed Items
E-mail	Login user	Scanned pages, mail transmission pages
Store to Folder		Scanned pages
Scan to PC		Scanned pages, file transfer pages
Store & Send Link		Scanned pages
Network Scanning		Scanned pages, file transfer pages
Store to USB		Scanned pages

Note

- To use the Store & Send Link feature, an optional component is required. For more information, contact our Customer Support Center.

■ Fax

The following table shows the scan jobs and the information that can be managed for each scan job.

Services (Jobs)		Target User	Managed Items
Send as Fax	Automatic Send	Login User	Transmissions/pages, charging units
	Manual Send (Call-in, Call-out)		
Receive Fax/ PrintFax	Automatic Reception/Print	- *1	Receptions/pages, charging units, printed pages/number of sheets
	Manual Reception/Print (Call-in, Call-out)		
Store Fax-Local Folder	Automatic Reception to Folder	- *1	Receptions/pages, charging units
	Print Folder-received Fax	Login User*5	Printed pages/number of sheets

Services (Jobs)		Target User	Managed Items
Fax Polling	Automatic Send (to Folder)	Unregistered User	Transmissions/pages
	Automatic Reception/Print	Login User	Polls/pages, charging units, printed pages/number of sheets
	Polling File Sample Printout (Folders, Polling Folders)	Login User*5	Pages/number of sheets
Fax Relay Broadcast	Relay Broadcasting, Printing	Relay Broadcast*2	Transmissions/pages, chargingunits, printed pages/ number of sheets
Direct Fax transmission		Login User	Transmissions/pages, charging units
Send as Internet Fax		Login User	Transmissions/pages
Receive Internet Fax/ Print Internet Fax	Automatic Reception/Print	- *3	Receptions/pages, printed pages/number of sheets
	Automatic Reception to Folder		Receptions/pages
	Print Folder-received Fax	Login User*5	Pages/number of sheets
Fax Polling	Automatic Transmission(Transfer)	- *4	Transmissions/pages, charging units

*1 : The machine counts jobs as Receive Fax.
*2 : The machine counts jobs as Relay Broadcast.
*3 : The machine counts jobs as Receive Internet Fax.
*4 : The machine counts jobs as Internet fax Transfer.
*5 : When you enable folder operation on the setting of authentication feature under system administration mode, the machine counts jobs as unregistered user's jobs.

◆ Restriction on Using the Accounting feature on Fax Jobs:

Note the following conditions when you use the accounting feature on fax jobs.

- Sending files from different user accounts to the same destination is not counted as a batch send.
- The number of charging units is calculated using the machine's built-in timer. Therefore, the communications charges calculated from the number of charging units may slightly differ from the charges invoiced by the telecommunications company.
- When fax-received pages are split for printing, the number of pages counted will be those received, not those printed.
- The number of charging units is not counted for the following communications:
  - When dialing a fax number using the numeric keypad or the On-hook/Off-hook feature.
  - When using an address number in which the billing data is not registered.
  - When a phone conversation took place, including the one before a transmission.

◆ Billing for Fax Jobs

Fax jobs are not billed for the following communications:

- When dialing a fax number using the numeric keypad or the On-hook/Off-hook feature.
- When using an address number in which the billing data is not registered.
- Manual Receive, Manual Send, or Manual Polling is used.
- When a phone conversation took place, including the one before a transmission.

Services Controlled by Authentication

This section describes the features that are controlled by the authentication feature.

The restricted features vary depending on how the machine is used.

Reference

- For information on the folder and job flow sheet restrictions when the authentication feature is enabled, refer to "Authentication for Job Flow Sheets and Folders" (P.435).

"Overview" (P.432)

"Combination of Authentication and Account Administration types" (P.432)

Overview

Some restrictions can be set for each user, and other restrictions can be set for the machine as a whole.

When the authentication feature is used, specified service to be used for each user and the available number of pages can be restricted.

Reference

- For information on the restrictions that can be set for each user, refer to "Service Access" (P.303), and for information on the restrictions that can be set for the machine as a whole, refer to "Service Access" (P.316).

Combination of Authentication and Account Administration types

The following shows the services that can be restricted in use and accounted according to the combination of the authentication and accounting administration types.

Reference

- For authentication procedure, refer to "Configuration for Authentication" (P.439).

Note

- To use the combination of user ID authentication and smart card authentication when [Login Type] is set to [Login to Local Accounts] , you need to enable user ID authentication. For the setting procedure, refer to "When Smart Card Reader is Connected" (P.319).

When [Login Type] is [Login to Local Accounts] and [Accounting Type] is [Local Accounting]

Services	Restrictions per User		Per-user Usage Count
	Feature Restrictions*	Account Limit*	
Copy	O	O	O
Print	O	O	O
Scan	O	O	O
Fax, Internet Fax	O	-	O

O : Available

- : Not available

* : For information of available setting for each user, refer to "Service Access" (P.303).

When [Login Type] is [Login to Local Accounts] and [Accounting Type] is [Network Accounting]

Services	Restrictions per User		Per-user Usage Count*2
	Feature Restrictions*1	Account Limit	
Copy	O	-	-
Print	O	-	-
Scan	O	-	-
Fax, Internet Fax	O	-	-

O : Available

- : Not available

*1 : The restriction is available with ApeosWare Device Management(sold separately).
*2 : The accounting is available with ApeosWare Device Management(sold separately).

When [Login Type] is [Login to Remote Accounts]

Services	Restrictions per User		Per-user Usage Count*
	Feature Restrictions	Account Limit	
Copy	O	-	-
Print	O	-	-
Scan	O	-	-
Fax, Internet Fax	O	-	-

O : Available

- : Not available

* : The accounting is available with ApeosWare Device Management(sold separately).

Important

- Note the following conditions when you use ApeosWare Log Management to perform account administration per user:
  - When users are registered in multiple domains, each user ID must be unique.
  - Before a user sends a job from a computer (print and fax), the user needs to log in from the computer to the remote server to have the server confirm the user ID.

When [Login Type] is [Login to Local Accounts] and [Accounting Type] is [Xerox Standard Accounting]

Services	Restrictions per User		Per-userUsage Count
	Feature Restrictions*	Account Limit*	
Copy	O	O	O
Print	O	O	O
Scan	O	O	O
Fax, Internet Fax	O	-	O

O : Available

- : Not available

* : You can select features available for each user. For more information, refer to the online help of CentreWare Internet Services.

Important

- To display the online help for CentreWare Internet Services, users need to have the environment to connect to the internet. The communication fee shall be borne by you.

Authentication for Job Flow Sheets and Folders

This section describes the restrictions of job flows and folders.

"Creating / Using Job Flow Sheet" (P.435)

"Creating / Using Folder" (P.437)

Creating / Using Job Flow Sheet

You can create the job flow sheets for the documents stored in folders.

The restrictions of the two job flow sheets created when the authentication feature is used and when that is not used, are different. Also, the restrictions of the job flow sheets created on the [Create Folder], [Send from Folder], or [Create Job Flow Sheet] screen are different.

Important

- When you switch the Login to Local Accounts feature from [enable] to [disable] or vice versa, all the job flow sheets used till then become unavailable besides for the system administrator. In this case, delete all the job flow sheets and create new ones.
- When you change [Login Type] to [Login to Remote Accounts] or to another login type from [Login to Remote Accounts], the job flow sheets that was used before the change will be deleted.
- When a job flow sheet which becomes unavailable due to the change of the login type is associated with a folder, the job flow sheet is available, but cannot be edited or copied. However, when the association is invalid, the job flow sheet will not be displayed.
- A job flow sheet created on the [Create Folder] screen or the [Send from Folder] screen can only be used for the folder on which the job flow sheet is created. The job flow sheet cannot be used for any other folders.
- The job flow sheets created on the network cannot be edited or copied on the machine.

Note

- When using Device Setup Tool, the job flow sheets for the documents stored in the folders and the scan documents can be created on the network. Device Setup Tool is downloaded from ApeosWare Management Suite on our website.

Reference

- For information of the job flow sheets which can be created on the machine, refer to "Create Job Flow Sheet" (P.279).

When the Authentication Feature is Enabled

Note

- When the Authentication feature is enabled, the following users can use the job flow sheets.
  - A login user and a system administrator when [Login Type] is set to [Login to Local Accounts]
  - A login user besides guest user when [Login Type] is set to [Login to Remote Accounts]
  - A login user when [Verify User Details] is set to [Yes] in [Network Accounting] and [Customize User Prompts] is set to [Display User ID & Account ID Prompts] or [Display User ID Prompt Only]

■ Creating Job Flow Sheet on the [Create Folder] screen / [Send from Folder] screen

The following shows the creator of job flow sheet, manageable user, and available operations.

Creator of Job Flow Sheet	Manageable User	Available Operations
Login User	Creator /System Administrator	Edit, Display, Copy, Delete, Select, Run, Link to Folder
System Administrator	All Login User /System Administrator	Edit*, Display, Copy, Delete*, Select, Run, Link to Folder

* : Only the system administrator can operate.

Note

- A user copies a job flow sheet becomes the creator of the copied job flow sheet.

■ Creating Job Flow Sheet on the [Create Job Flow Sheet] screen

The following shows the creator of job flow sheet, manageable user, and available operations.

Creator ofJob Flow Sheet	Manageable User	Available Operations
Login User	Creator /System Administrator	Edit, Display, Copy, Delete, Select, Run
System Administrator	All Login User /System Administretor	Edit*, Display, Copy, Delete*, Select, Run

* : Only the system administrator can operate.

Note

- A user copies a job flow sheet becomes the creator of the copied job flow sheet.

When the Authentication Feature is Disabled

■ Creating Job Flow Sheet on the [Create Folder] screen / [Send from Folder] screen

The following shows the creator of job flow sheet, manageable user, and available operations.

Creator of Job Flow Sheet	Manageable User	Available Operations
Local User	All Local User /System Administrator	Edit, Display, Copy, Delete, Select, Run, Link to Folder
System Administrator	All Local User /System Administretor	Edit*, Display, Copy, Delete*, Select, Run, Link to Folder

* : Only the system administrator can operate.

Note

- A user copies a job flow sheet becomes the creator of the copied job flow sheet.

■ Creating Job Flow Sheet on the [Create Job Flow Sheet] screen

The following shows the creator of job flow sheet, manageable user, and available operations.

Creator ofJob Flow Sheet	Manageable User	Available Operations
Local User	All Local User /System Administrator	Edit, Display, Copy, Delete, Select, Run
System Administrator	All Local User /System Administretor	Edit*, Display, Copy, Delete*, Select, Run

* : Only the system administrator can operate.

Note

- A user copies a job flow sheet becomes the creator of the copied job flow sheet.

Creating / Using Folder

The folders created when the authentication feature is used and is not used are different in use.

Important

- When you switch the Login to Local Accounts feature from [enable] to [disable] or vice versa, all the job flow sheets used till then become unavailable besides for the system administrator. In this case, delete all the job flow sheets and create new ones.
- When you change [Login type] to [Login to Remote Accounts] or to another login type from [Login to Remote Accounts], the job flow sheets that was used before the change will be deleted.

When the Authentication Feature is Enabled

Note

- When the Authentication feature is enabled, the following users can use the folders.
  - A login user and a system administrator when [Login Type] is set to [Login to Local Accounts]
  - A login user besides guest user when [Login Type] is set to [Login to Remote Accounts]
  - A login user when [Verify User Details] is set to [Yes] in [Network Accounting] and [Customize User Prompts] is set to [Display User ID & Account ID Prompts] or [Display User ID Prompt Only]

The following shows the relationship between the creator of a folder and the user who can manage the folder.

Creator of Folder	Manageable User	Available Operations
Login User	Creator /System Administrator	Display, Delete, Change Settings, Display File, Delete File, Register File, Output File, Display Job Flow Sheet, Link Job Flow Sheet, Run Job Flow Sheet
System Administrator	All Unregistered User*2 / All Login User / System Administretor	Display, Delete*1, Change Settings*1, Display File, Delete File, Register File, Output File, Display Job Flow Sheet, Link Job Flow Sheet*1, Run Job Flow Sheet

*1 : Only the system administrator can operate.
*2 : Available when you enable folder operation on the setting of authentication feature in the system administration mode.

When the Authentication Feature is Disabled

The following shows the relationship between the creator of a folder and the user whocan manage the folder.

Creator of Folder	Manageable User	Available Operations
Login User	Creator /System Administrator	Display, Delete, Change Settings, Display File, Delete File, Register File, Output File, Display Job Flow Sheet, Link Job Flow Sheet, Run Job Flow Sheet
System Administrator	All Login User /System Administretor	Display, Delete*1, Change Settings*1, Display File, Delete File, Register File, Output File, Display Job Flow Sheet, Link Job Flow Sheet*1, Run Job Flow Sheet

* : Only the system administrator can operate.

Note

- Registering and outputting files using Network Scanner Utility 3 is not supported as the authenticated operation.

Configuration for Authentication

This section describes the settings to use the Authentication feature on the machine.

"Installation Overview" (P.439)

"Enabling Authentication" (P.439)

"Changing the Default Authorization Group Settings" (P.442)

"Creating an Authorization Group" (P.443)

Installation Overview

To use the Authentication feature, configure the following settings.

Important

- If job flow sheets, which are no longer available for use because of a change in the Login Type, are linked to folders, they cannot be edited or copied, but still can be used. If you cancel the links, however, the job flow sheets will no longer be displayed and will be unavailable.

Change the default authorization group settings and add an authorization group, as necessary.

Login to Local Accounts

Specify the Login Type and access control, and then create a user.

Enabling Authentication

This section describes the procedures for [Login to Local Accounts] and [Login to Remote Accounts] respectively.

When [Login to Local Accounts] is Selected

Perform the following procedures to use the local authentication.

1. Press the <Log In/Out> button.

2. Enter the system administrator's user ID with the numeric keypad or the keyboard displayed on the screen, and select [Enter].

   When a passcode is required, select [Next] and enter the system administrator's passcode, and select [Enter].

   Note

   - The default user ID is "11111".
   - The default passcode is "x-admin".

3. Select [Tools] on the Services Home screen.

4. Select [Authentication/Security Settings].

5. Select [Authentication].

6. Select [Login Type].

7 Select [Login to Local Accounts], and then select [Save].

Reference

- For more information on the authentication method, refer to "Login Type" (P.315).

8 Select [Access Control].

9 Select [Service Access].

10 Select [Unlocked] for the required services to permit users unlimited access, and then select [Save].

11 After you finish settings for each feature, select [Close].

12 To disable button operations on the control panel, select [Device Access] and select [Locked], and then select [Save] and then [Close].

13 Select [Passcode Entry for Control Panel Login] under [Passcode Policy]. Select [On] to prompt users to enter their passcode, or select [Off] if the passcode entry is not required, and then select [Save] and then [Close].

14 Select [Create/View User Accounts].

15 Select a user displayed as [<Available>], and then select [Create/Delete].

16 Enter a User ID and select [Save].

17 Select [Account Limit].

18 Configure the [Account Limit] and [Feature Access] settings for each service, and then select [Close].

19 If necessary, select a user role and an authorization group for the user under [User Role] and [Add This User To Authorization Group] respectively, and then select [Save].

20 Select [Close] repeatedly until the [Tools] screen is displayed.

21 Select [Close].

Note

- Rebooting the machine may be required depending on the settings. When a message displayed on the screen, follow the message and reboot the machine.
- The machine enters the Login mode, and [Login] is displayed at the lower left of the Services Home screen.
- When [Locked (Show Icon)] is selected for a service under [Service Access],[ ]is displayed on the button of the applicable service on the Services Home screen. Also,
  [: Requires Login]is displayed at the lower left of the Services Home screen.
  [ ]and[: Requires Login]are not displayed after authentication.
- When [Locked (Hide Icon)] is selected for a service under [Service Access] the applicable service is not displayed on the Services Home screen. The services is displayed after authentication.

When [Login to Remote Accounts] is Selected

Perform the following procedures to use remote authentication.

1 Press the <Log In/Out> button.

2 Enter the system administrator's user ID with the numeric keypad or the keyboard displayed on the screen, and select [Enter].

When a passcode is required, select [Next] and enter the system administrator's passcode, and select [Enter].

Note

- The default user ID is "11111".
- The default passcode is "x-admin".

3 Select [Tools] on the Services Home screen.

4 Select [Authentication/Security Settings].

5 Select [Authentication].

6 Select [Login Type].

7 Select [Login to Remote Accounts], and then select [Save].

Reference

- For more information on the authentication method, refer to "Login Type" (P.315).

8 Select [Yes].

9 Select [Access Control].

10 Select [Service Access].

11 Select [Unlocked] for the required services to permit users unlimited access, and then select [Save].

12 Select [Close] repeatedly until the [Tools] screen is displayed.

13 Select [System Settings].

14 Select [Connectivity & Network Setup].

15 Select [Remote Authentication/Directory Service].

16 Select [Authentication System Setup] > [Authentication System], and then select a remote authentication server.

Reference

- For more information, refer to "Remote Authentication/Directory Service" (P.214).

Note

- The available options are [Kerberos (Windows 2000)], [Kerberos (Solaris)], [LDAP], and [SMB].

17 Configure the settings for the remote authentication server.

Reference

- For more information on the Authentication feature, refer to "Kerberos Server Settings" (P.215), "LDAP Server/Directory Service Settings" (P.216), and "SMB Server Settings" (P.219).

18 Select [Close] repeatedly until the [Tools] screen is displayed.

19 Select [Close].

Note

- Rebooting the machine may be required depending on the settings. When a message displayed on the screen, follow the message and reboot the machine.
- The machine enters the Login mode, and [Login] is displayed at the lower left of the Services Home screen.
- When [Locked (Show Icon)] is selected for a service under [Service Access],[ ]is displayed on the button of the applicable service on the Services Home screen. Also,
  [: Requires Login]is displayed at the lower left of the Services Home screen.
  [ ]and[: Requires Login]are not displayed after authentication.
- When [Locked (Hide Icon)] is selected for a service under [Service Access] the applicable service is not displayed on the Services Home screen. The services is displayed after authentication.

■ When an LDAP server is used as a remote authentication server

Set the user authorization on the LDAP server using the following steps.

1 Start CentreWare Internet Services.

2 Click the [Properties] tab.

3 Click [Connectivity] > [Protocols] > [LDAP] > [LDAP Authorization Access].

4 Set attributes in [System Administrator Access] and [Accounting Administrator Access].
Setting example:
System Administrator Access: CN=SA,CN=Users,DC=secEQ,DC=local
Accounting Administrator Access: CN=AA,CN=Users,DC=secEQ,DC=local

5 Click [Apply].

Changing the Default Authorization Group Settings

Perform the following procedures to change the settings of the default authentication group.

The settings changed here will be used as the default value of the authorization group for a created user.

1 Press the <Log In/Out> button

2 Enter the system administrator's user ID with the numeric keypad or the keyboard displayed on the screen, and select [Enter].

When a passcode is required, select [Next] and enter the system administrator's passcode, and select [Enter].

Note

- The default user ID is "11111".
- The default passcode is "x-admin".

3 Select [Tools] on the Services Home screen.

4 Select [Authentication/Security Settings].

5 Select [Authentication].

6 Select [Create Authorization Groups].

7 Select the group displayed as [DefaultGroup (Default)], and then select [Create/ Delete].

8 Set each item.

Reference

- For more information on the change of the authorization group, refer to "Create Authorization Groups" (P.317).

9 Select [Close] repeatedly until the [Tools] screen is displayed.

10 Select [Close].

Creating an Authorization Group

Perform the following procedures to add authorization groups, if necessary.

1 Press the <Log In/Out> button.

2 Enter the system administrator's user ID with the numeric keypad or the keyboard displayed on the screen, and select [Enter].

When a passcode is required, select [Next] and enter the system administrator's passcode, and select [Enter].

Note

- The default user ID is "11111".
- The default passcode is "x-admin".

3 Select [Tools] on the Services Home screen.

4 Select [Authentication/Security Settings].

5 Select [Authentication].

6 Select [Create Authorization Groups].

7 Select a group displayed as [(No Name)], and then select [Create/Delete].

8 Enter a group name into [Group Name].

9 Set the other items.

Reference

- For more information on the authorization group settings, refer to "Create Authorization Groups" (P.317).

10 Select [Close] repeatedly until the [Tools] screen is displayed.

11 Select [Close].

Configuration for IC Card Reader (Optional)

You can use a smart card for authentication by comparing the information registered on the smart card and the user information on the machine. You can also restrict the machine use and perform accounting of the jobs using the information registered on the smart card.

This section describes the supported smart cards and how to register a smart card to use at the machine.

Note

- An optional component is required to use this feature. For more information, contact our Customer Support Center.

The following shows the reference section for card information and each procedure.

"Step 1 Preparations" (P.444)

"Step 2 Logout Method Using the Smart Card" (P.445)

"Step 3 Registering Smart Card Information" (P.445)

Step 1 Preparations

The machine supports IC Card Reader available for the following smart card type:

When using Embedded IC Card Reader

- MIFARE® (Type A)
  - Fuji Xerox IC Card (Type A)
  - Other MIFARE compatible smart cards*
- elWISE/ELWISE (Type B)
  - eLWISE
  - ELWISE
- FeliCa®
  - Fuji Xerox IC Card
  - IC Card compatible with SSFC® version 1.0 format
  - Other FeliCa compatible smart cards*

* : The embedded IC Card Reader of the machine may not support some smart cards.

When using Embedded IC Card Reader A

- MIFARE® (Type A)
  - Fuji Xerox IC card (Type A)
  - Other MIFARE compatible smart cards*
- FeliCa®
  - Fuji Xerox IC card (IDm only)
  - Other FeliCa compatibled smart cards (IDm only)*
- HID® Prox
- HID® iCLASS® (UID only)
- EM Prox
- HITAG(HITAG2)

- LEGIC® Advant(UID only)

* : The embedded IC Card Reader of the machine may not support some smart cards.

Note

- When you confirm whitch IC Card Reader you use, contact our Customer Support Center.

Step 2 Logout Method Using the Smart Card

Perform the following steps to set how to logout authentication using the smart card.

1. Press the <Log In/Out> button.
2. Enter the system administrator's user ID with the numeric keypad or the keyboard displayed on the screen, and select [Enter].

   When a passcode is required, select [Next] and enter the system administrator's passcode, and select [Enter].

   Note

   - The default user ID is "11111".
   - The default passcode is "x-admin".
3. Select [Tools] on the Services Home screen.
4. Select [Authentication/Security Settings].
5. Select [Authentication].
6. Select [User Details Setup].
7. Select [Smart Card Logout Timing], and then select [Change Settings].
8. Select the authentication logout method, and then select [Save].
9. Select [Close].

Step 3 Registering Smart Card Information

The system administrator can register smart cards using CentreWare Internet Services.

Note

- The smart card information can be set from CentreWare Internet Services. For more information, refer to the help of CentreWare Internet Services.
- The information used for authentication can also be set from CentreWare Internet Services. For more information, refer to the help of CentreWare Internet Services.

Important

- To display the online help for CentreWare Internet Services, users need to have the environment to connect to the internet. The communication fee shall be borne by you.

Configuration for Account Administration

This section describes the settings to use the accounting feature on the machine.

"Step 1 Selecting an Accounting Type" (P.446)

"Step 2 Registering User Information" (P.446)

Step 1 Selecting an Accounting Type

The following describes the configuration procedures to use the accounting feature.

Reference

- For information on relationships between the authentication and accounting modes, refer to "Authentication and Accounting Relationship" (P.429).

1. Press the <Log In/Out> button.

2. Enter the system administrator's user ID with the numeric keypad or the keyboard displayed on the screen, and select [Enter].

   When a passcode is required, select [Next] and enter the system administrator's passcode, and select [Enter].

   Note

   - The default user ID is "11111".
   - The default passcode is "x-admin".

3. Select [Tools] on the Services Home screen.

4. Select [Accounting].

5. Select [Accounting Type].

6. Select an accounting type, and then select [Save].

   Note

   - You can select the accounting type from [Local Accounting], [Network Accounting], and [Xerox Standard Accounting].

7. Select [Close] repeatedly until the [Tools] screen is displayed.

8. Select [Close].

Step 2 Registering User Information

1. Press the <Log In/Out> button.

2 Enter the system administrator's user ID with the numeric keypad or the keyboard displayed on the screen, and select [Enter].

When a passcode is required, select [Next] and enter the system administrator's passcode, and select [Enter].

Note

- The default user ID is "11111".
- The default passcode is "x-admin".

3 Select [Tools] on the Services Home screen.

4 Select [Accounting].

5 Select [Create/View User Accounts].

6 Select [<Available>], and then select [Create/Delete].

7 Enter a User ID and select [Save].

8 Select [Service Access].

9 Configure the [Service Access] and [Feature Access] settings for each service, and then select [Save].

Reference

- For more information on the service access, refer to "Service Access" (P.303).

10 If necessary, select a user role and an authorization group for the user under [User Role], and then select [Save].

Note

- [User Role] is displayed only when [Login Type] is set to [Login to Local Accounts].

Reference

- For more information on the user role, refer to "User Role" (P.304).

11 Select [Close] repeatedly until the [Tools] screen is displayed.

12 Select [Close].

User Authentication Operations

The machine has the Authentication feature to restrict the services available.

This section describes the authentication method to use the restricted services.

The following shows the reference section for each procedure.

"Authenticating Login Users" (P.448)

"Changing Passcode" (P.449)

Authenticating Login Users

There are two methods to authenticate login users: using the control panel of the machine and touching the smart card to the IC Card Reader.

To authenticate the login users using the operator panel, the user must enter the user ID. In addition, the passcode entry is also required when [Passcode Entry for Control Panel Login] is set to [On] under Authentication/Security Settings] > [Authentication] > [Passcode Policy].

Reference

- For more information on the passcode policy, refer to "Passcode Policy" (P.321).
- For more information on user registration from the touch screen, refer to "Create/View User Accounts" (P.317).

Note

- An optional component is required to use this feature. For more information, contact our Customer Support Center.

Log In/Log Out from the Control Panel

■ User Authentication

1. Press the <Log In/Out> button or the login information field on the touch screen.
2. Enter the user ID with the numeric keypad or the keyboard displayed on the screen, and select [Enter].

   When a passcode is required, select [Next] and enter the passcode, and select[Enter].

Important

- Finish user authentication before you cancel the Interrupt mode.

Note

- When you select the service restricted, the [Log In] screen may appear. Enter the user ID and/or the passcode to use the service.
- When the user is authenticated, the <Log In/Out> button is lit.

■ Logging Out of User Authentication

1. Press the <Log In/Out> button.

Note

- You can also log out by pressing the login information field on the touch screen, and then select [Logout].
- When the user is logged out, the <Log In/Out> button light goes out.

Log In/Log Out by Touching the IC Card Reader (Optional)

Changing Passcode

You can change the passcode to use for user authentication. Change the passcode by following the steps in this section.

Changing Passcode by User

When a user is authenticated, the user can change his/her own passcode.

1. Select [Setup] on the Services Home screen.
2. Select [User Details Setup].
3. Select [Change Passcode].
4. Enter the current passcode, and then select [Next].
5. Select [New Passcode] and enter a new passcode, and then select [Save].
6. Select [Retype Passcode] and re-enter the new passcode, and then select [Save].
7. Select [Close].

Setting or Changing Passcode by System Administrator

The system administrator can set or change passcodes using CentreWare Internet Services.

Reference

- For more information on setting or changing passcodes from the touch screen, refer to "Create/View User Accounts" (P.301).

1. Start CentreWare Internet Services.

Reference

- For information on how to start CentreWare Internet Services, refer to "Starting CentreWare Internet Services" (P.330).

2. Click the [Properties] tab.
3. Click [Security], and then click [Authentication Configuration].
4. Click [Next].
5. Enter the account number of the user to set or change in [Account Number], and then click [Edit].
6. Enter a new passcode in [Password].
7. Re-enter the new passcode in [Retype Password].
8. Click [Apply].

15

Problem Solving

Troubleshooting

This section describes troubles that may occur with the machine and their solutions. Follow the troubleshooting procedure below to solve the problems.

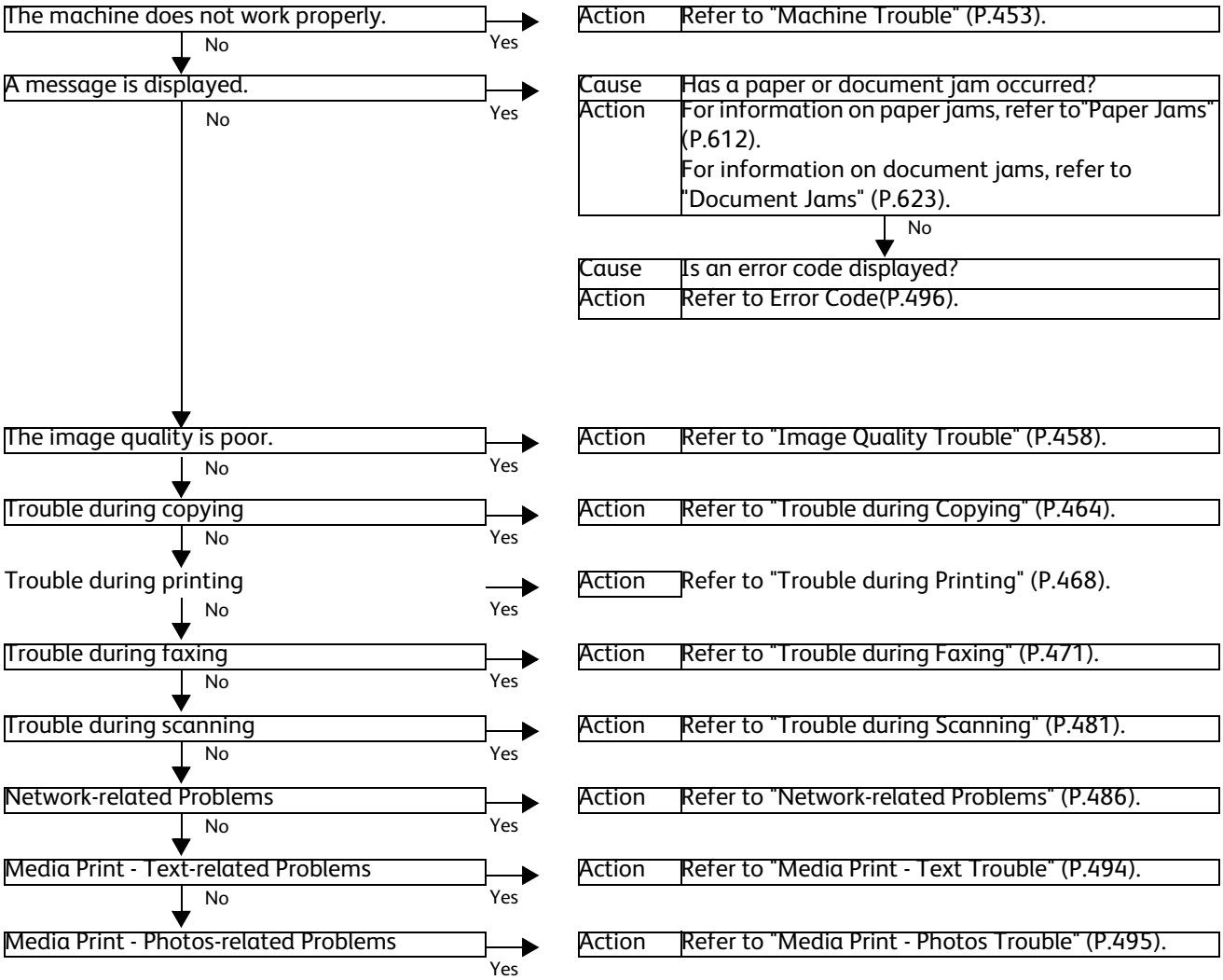

If the error is not resolved even after following the above procedure, contact our Customer Support Center.

When the EP system is available and a check or maintenance is required, the machine sends a check or maintenance request to our Customer Support Center. A service representative visits you as required. Requesting a check or maintenance should be performed by a system administrator.

Note

- The EP system may not be available in some regions. For more information, contact our Customer Support Center.

Reference

- For more information on the check or maintenance procedure of the EP system via the Internet, refer to "EP Diagnostic Request/ Repair Request" (P.166) and "Check EP Connection" (P.167).
- For more information on the EP system, refer to EP System(P.749).

Machine Trouble

Before you conclude that the machine is defective, check the machine status again.

Symptom	Cause	Remedy
The machine is not powered on.	Is the main power and power switched on?	Switch the main power and power on. **Reference** • Refer to "Product Overview" in the User Guide.
	Is the power cord plugged into the power outlet?	Switch the main power and power off, and then firmly plug the power cord into the connector of the machine and power outlet. Then switch the main power and power on. **Reference** • Refer to "Product Overview" in the User Guide.
	Is the power cord disconnected from the machine?	
	Does the AC outlet supply power properly?	Connect another appliance to the outlet to verify the power supply. Refer to "Before Using the Machine" in the User Guide.
The <Error> indicator is blinking.	The system of the machine or the components installed may have a trouble.	Switch the main power and power off and then on. If the error still is not resolved, contact our Customer Support Center.
The <Error> indicator is lit.	Is paper or a document jammed?	Remove the jammed paper or document. **Reference** • If paper is jammed, refer to"Paper Jams" (P.612), and a document is jammed, refer to "Document Jams" (P.623).
	Is the front cover or top cover open?	Solve the problem by following the message displayed.
	Is a message displayed on the touch screen prompting you to replacethe consumables?	Replace the consumables indicated in the message. **Reference** • Refer to "Replacing Consumables" (P.78).
	Is a message displayed in the upper part of the touch screen?	Check the message and solve the problem.If an error code such as "016-450" isdisplayed, check the error code list and solve the problem. **Reference** • Refer to "Error Code" (P.496).
The touch screen is too dark.	Is the <Power Saver> button lit?	The machine is in the Power Saver mode. Press the <Power Saver> button on the control panel to exit the Power Saver mode. **Reference** • Refer to "Product Overview" in the User Guide.

Symptom	Cause	Remedy
The touch screen is too dark.	Is the screen brightness too low?	Adjust the screen brightness on the [Screen Brightness] screen. **Reference** • Refer to "Adjusting Screen Brightness" (P.41).
Unable to print, or unable to copy.	Is a message displayed on the touch screen?	Follow the instructions displayed to resolve the problem.
	Is the power cord disconnected from the machine?	Switch the main power and power off, and then firmly plug the power cord into the connector of the machine and power outlet. Then switch the main power and power on. **Reference** • Refer to "Product Overview" > "Power Source" in the User Guide.
Paper is not fed from Tray 5.	Is the specified size paper loaded in the tray?	Follow the instructions displayed to load paper of correct size, and then try again. **Reference** • Refer to "Loading Paper in Tray 5 (Bypass)" (P.68).
Unsatisfactory print quality.	A probable cause is an image defect.	Resolve the problem by referring to "Image Quality Trouble". **Reference** • Refer to "Image Quality Trouble" (P.458).
Unable to print text correctly. (Text is garbled.)	Non-standard fonts are used for printing.	Check the application or print driver settings. If PostScript (optional) is being used, download the required fonts.
Unable to insert or remove a paper tray.	Did you open a cover or turn the machine off during printing?	Do not forcibly insert or remove the paper tray. Switch off the power. In a few seconds, switch on the power. When the machine is ready to receive data, insert or remove the paper tray.
Unable to copy with the specified size.	Is the document glass or the document cover dirty?	Clean the document glass and the document cover. **Reference** • Refer to "Cleaning the Document Cover and Document Glass" (P.99).
	Is the document a transparent type such as a transparency film?	Place the document on the documentglass, and place a white sheet on top of the document when copying.
	Is the document in the correct position?	Load the document correctly. **Reference** • Refer to "Copy" > "Copying Procedure" in the User Guide.
	Is the document loaded correctly?	

Symptom	Cause	Remedy
Unable to copy with the specified size.	Are the document guides on the document feeder set in the correct positions?	Adjust the document guide positions. **Reference** • Refer to "Copy" > "Copying Procedure" in the User Guide.
	Is the document folded?	Unfold and correctly load the document. **Reference** • Refer to "Copy" > "Copying Procedure" in the User Guide.
	Is the document a non-standard size?	Specify the document size. **Reference** • Refer to "Copy" > "Copying Procedure" in the User Guide.
Paper is often jammed or wrinkled.	Is the paper loaded correctly in the tray?	Load the paper correctly. **Reference** • Refer to ""Loading Paper" (P.66).
	Is the paper tray inserted correctly?	Firmly push in the paper tray until it stops to insert it correctly. **Reference** • Refer to "Loading Paper" (P.66).
	Is the paper damp?	Replace the paper with a new one. **Reference** • Refer to "Loading Paper" (P.66).
	Is the paper curled?	Turn over the paper in the tray, or replace the paper with a new one. **Reference** • Refer to "Loading Paper" (P.66).
	Are the paper and paper tray settings correct?	Correctly set the paper and paper trays to correspond to the paper. **Reference** • Refer to "Changing the Paper Settings" (P.72).
	Are any torn pieces of paper remaining or is there a foreign object in the machine?	Open the cover of the machine or slide out the paper tray to remove the torn pieces or the foreign object. **Reference** • Refer to "Paper Jams" (P.612) or "Loading Paper" (P.66).
	Is non-standard paper loaded in the tray?	Replace with paper that meets machine specifications. **Reference** • Refer to "Paper Types" (P.48) or "Loading Paper" (P.66).
	Is paper exceeding the maximum fill line in the tray?	Load paper in the paper tray so that it does not exceed the maximum fill line. **Reference** • Refer to "Loading Paper" (P.66).

Symptom	Cause	Remedy
Paper is often jammed or wrinkled.	Are the paper guides set correctly?	Load the paper correctly, and align thepaper guides to the paper. **Reference** • Refer to "Loading Paper" (P.66)or "Changing the Paper Size" (P.70).
	Is the image nearly the same size as the paper?	Increase the edge erase widths.
	Is the paper finely cut out?	Some types of paper may not be cut out finely. Load the paper after fanning it well.
A document is not fed into the document feeder.	Is the document small?	The minimum size of the document that can be loaded on the document feeder is 125 x 85 mm (Standard size: A5, A5). **Reference** • Refer to "Copy" > "Copying Procedure" in the User Guide.
An error message appears after paper is loaded in Tray 5 and the <Start> button is pressed.	Check the positions of the paper guides of Tray 5.	Adjust the paper guides to the correctpositions. **Reference** • Refer to "Loading Paper in Tray 5 (Bypass)" (P.68).
Documents are often jammed.	Are suitable types of documents being used?	Correctly load documents suitable for the document feeder. **Reference** • Refer to "Copy" > "Copying Procedure" in the User Guide.
	Are you trying to use irregular shaped documents, business cards, transparencies, or thin documents?	
	Are you trying to use documents with sticky tags, paper clips or adhesive tape?	Remove sticky tags, paper clips or adhesive tape from the document before copying.
	Are the document guides set in the correct positions?	Adjust the document guide positions. **Reference** • Refer to "Copy" > "Copying Procedure" in the User Guide.
	Is a piece of torn paper remaining in the document feeder?	Open the document feeder cover andcheck inside. **Reference** • Refer to "Document Jams" (P.623).
	Is the [Mixed Size Originals] setting set to [Off] when you copy originals of different sizes?	Set [Mixed Size Originals] to [On]. **Reference** • Refer to "Copy" > "Layout Adjustment" > "Mixed Size Originals (Scanning Different Size Documents Simultaneously)" in the User Guide.

Symptom	Cause	Remedy
Documents are often jammed.	Is an A5 document loaded in landscape orientation(▭) on the document feeder when [Mixed SizeOriginals] is set to [On]?	Load the A5 document in portrait orientation (▯).
An edge of thedocument isfolded.	Is the document curled?	Flatten the curl and load the document again.
Cannot copy incolor.	Is [Output Color] set to[Black & White]?	Set [Output Color] to [Color]. **Reference** • Refer to "Copy" > "Copy" > "Output Color (Selecting the Color for Copying)" in the User Guide.
	Is a message displayed on the touch screen prompting you to replace the toner cartridge?	Replace the toner cartridge of the color indicated in the message. **Reference** • Refer to "Replacing Toner Cartridge" (P.80).
	Is a message displayed on the touch screen prompting you to replace the drum cartridge?	The drum cartridge needs to be replaced. Contact our Customer Support Center.
Cannot staple properly	Is staple jam occurred in the staple cartridge?	Remove the staple jammed in thecartridge. **Reference** • Refer to "Stapler Faults" (P.626).
	Is the print driver set correctly?	Check the [Staple] setting in [Print Setup] in the print driver when you send a print job from the computer.

Image Quality Trouble

If the image quality of printed documents is poor, identify the symptom in the following table to perform the remedy.

If image quality does not improve even after performing the remedy, contact our Customer Support Center.

Symptom	Cause	Remedy
The copy is dirty.	Is the document glass or the document cover dirty?	Clean the document glass and the document cover. **Reference** • Refer to "Cleaning the Document Cover and Document Glass" (P.99).
	Is the document a transparent type such as a transparency film?	If the document is transparent, dirt on the document cover will be copied. Place a white sheet of paper on top of thedocument when copying.
	Is the document colored, rough, or a blueprint?	Adjust the copy density or image quality. **Reference** • Refer to "Copy" > "Image Quality" in the User Guide.
	Is the document glossy printing paper?	Glossy printing paper easily sticks to the document glass, and shadows are sometimes copied, soiling the image. Place a transparency film under the document when copying.
The copy is too dark.	Is the copy density set to [Darken]?	Adjust the copy density. **Reference** • Refer to "Copy" > "Image Quality" in the User Guide.
The copy is too light.	Is the document faint?	
	Is the copy density set to [Lighten]?	
The copy is slightly misaligned.	Are the paper edges aligned and the leading edge adjusted to the tray corners?	Align the paper edges, adjust them to the tray's top corners, and reload the paper. **Reference** • Refer to "Loading Paper" (P.66).
The copy is misaligned or skewed.	Is the document loaded correctly?	Load the document correctly. **Reference** • Refer to "Copy" > "Copying Procedure" in the User Guide.
	Is the paper loaded correctly in the tray?	Load the paper correctly. **Reference** • Refer to "Loading Paper" (P.66).
	Are the paper guides of Tray 5 correctly aligned to the paper?	**Reference** • Refer to "Loading Paper in Tray 5 (Bypass)" (P.68).

Symptom	Cause	Remedy
The copy is misaligned or skewed.	Are the document guides on the document feeder set in the correct positions?	Load the document correctly, and align the document guides to the document edges. **Reference** • Refer to "Copy" > "Copying Procedure" in the User Guide.
	Is the paper tray inserted correctly?	Firmly push in the tray until it stops to insert it properly. **Reference** • Refer to "Loading Paper" (P.66).
Part of the image is missing on the copy.	Is the paper damp?	If the paper is damp, the copy image may be partially missing or unclear. Replace the paper with a new one. **Reference** • Refer to "Loading Paper" (P.66).
	Is folded or wrinkled paper included in the tray?	Remove the unsuitable paper or replace all of the paper with a new one. **Reference** • Refer to "Loading Paper" (P.66).
	Is the document pasted or folded?	The pasted or folded section may not be laying flat on the document glass. Place a stack of white sheets on top of the document to flatten the document against the document glass.
The copy has a stripe pattern.	Is the enlargement ratio too large?	Vertical stripes may be printed on the copies depending on the ratio. Adjust the ratio to eliminate the stripes. **Reference** • Refer to "Copy" > "Copy" > "Reduce/Enlarge (Making Enlarged/Reduced Copies)" in the User Guide.
Color shift of color copies is poor, resulting in unsatisfactory image quality.	Is the color calibration incorrect?	Execute auto calibration. **Reference** • Refer to "Executing Calibration" (P.103).
	Is the machine set where it is exposed to direct sunlight?	If the document glass is exposed to strong light when you turn the machine on or cancel the Power Saver mode, color shift may occur. Close the document cover and turn the machine on, and when the machine becomes ready to copy or print, turn the machine off and then on one more time.

Symptom	Cause	Remedy
Printing is faint. (smudged, unclear) 	The paper is damp.	Replace the drum cartridge with a new one. **Reference** • Refer to "Loading Paper" (P.66).
	The drum cartridge has deteriorated or is damaged.	Replace the drum cartridge with a new one. Contact our Customer Support Center.
	There is no toner left in the toner cartridge.	Replace the toner cartridge with a new one. **Reference** • Refer to "Replacing Toner Cartridge" (P.80).
Black dots are printed. 	The drum cartridge has deteriorated or is damaged.	Replace the drum cartridge with a new one. Contact our Customer Support Center.
Black or colored lines are printed. 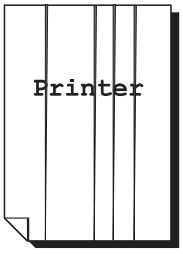 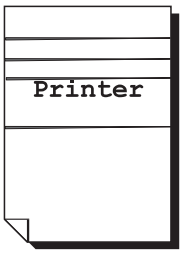 	The drum cartridge hasdeteriorated or is damaged.	Replace the drum cartridge with a new one. Contact our Customer Support Center.
Dirt appears at equal intervals. 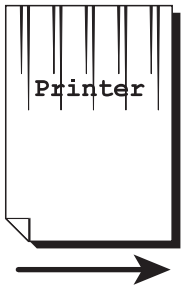 Paper feed direction	The paper path is dirty.	Print a few pages to remove the dirt.
	The drum cartridge has deteriorated or is damaged.	Replace the drum cartridge with a new one. Contact our Customer Support Center.

Symptom	Cause	Remedy
White dots appear in black filled areas. 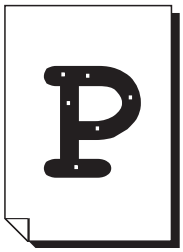	The paper is unsuitable.	Load suitable paper. **Reference** • Refer to "Loading Paper" (P.66).
	The drum cartridge has deteriorated or is damaged.	Replace the drum cartridge with a new one. Contact our Customer Support Center.
Printed toner smudges when rubbed with your finger. Toner is not fused. The paper is soiled with toner.	The paper is damp.	Replace the paper with a new one. **Reference** • Refer to "Loading Paper" (P.66).
	The paper is unsuitable.	Load suitable paper. **Reference** • Refer to "Loading Paper" (P.66).
The entire paper area is printed black.	The drum cartridge has deteriorated or is damaged.	Replace the drum cartridge with a new one. Contact our Customer Support Center.
	High-voltage power supply may have malfunctioned.	Contact our Customer Support Center.
Nothing is printed. 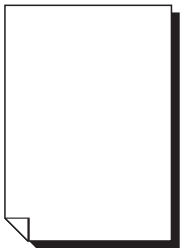	Two or more sheets of paper are being fed simultaneously (double-feed).	Fan the paper well and load it again. **Reference** • Refer to "Loading Paper" (P.66).
	Power supply or high-voltage power supply may have malfunctioned.	Contact our Customer Support Center.

Symptom	Cause	Remedy
White areas or white or colored stripes appear.	The paper is damp.	Replace the paper with a new one. **Reference** • Refer to "Loading Paper" (P.66).
	The paper is unsuitable.	Load suitable paper. **Reference** • Refer to "Loading Paper" (P.66).
The entire output is faint.	Two or more sheets may be fed simultaneously.	Fan the paper well and load it again. **Reference** • Refer to "Loading Paper" (P.66).
Paper becomes wrinkled.	The paper is unsuitable.	Replace the paper with a new one. **Reference** • Refer to "Loading Paper" (P.66).
	Paper has been added to the paper loaded.	
	The paper is damp.	
Text is blurred.	The paper is unsuitable.	Replace the paper with a new one. **Reference** • Refer to "Loading Paper" (P.66).
	Paper has been added tothe paper loaded.	
	The paper is damp.	
White or color patches appear vertically.	The drum cartridge has deteriorated or is damaged.	Replace the drum cartridge with a new one. **Note** • Contact our Customer Support Center. Clean the charge corotron. If the problem still persists, the drum cartridge needs to be replaced. Contact your Fuji Xerox Customer Support Center.
	No toner remains in the toner cartridge.	Replace the toner cartridge with a new one. **Reference** • Refer to "Replacing Toner Cartridge" (P.80).

Paper feed direction

Symptom	Cause	Remedy
Text or images are printed at an angle.	The paper guides in the paper tray are not set in the correct positions.	Adjust the horizontal and vertical paper guides to the correct positions. **Reference** • Refer to "Loading Paper" (P.66).

Trouble during Copying

This section describes how to resolve copy problems.

Unable to Copy

If you cannot copy a document, identify the symptom in the following table to perform the remedy.

Symptom	Cause	Remedy
The document is not correctly fed from the document feeder.	The document is too small.	The minimum size of document that can be loaded on the document feeder is 125 x 85 mm (A5, A5). **Reference** • Refer to "Copy" > "Copying Procedure" in the User Guide.
	The document type is unsuitable.	The document feeder does not feed irregular sized documents, business cards, transparencies, or thin documents. In addition, the document feeder does not feed documents with sticky tags, paper clips, or adhesive tape. **Reference** • Refer to "Copy" > "Copying Procedure" in the User Guide.
	The document guides are set in incorrect positions.	Adjust the document guides to the document. **Reference** • Refer to "Copy" > "Copying Procedure" in the User Guide.
	A piece of torn paper remains in the document feeder.	Open the document feeder cover, and remove the piece. **Reference** • Refer to "Document Jams" (P.623).
	Documents of mixed sizes are loaded.	When loading documents of mixed sizes, be sure to set [Mixed Size Originals] to [On]. Otherwise, a paper jam will occur. **Reference** • Refer to "Copy" > "Layout Adjustment" > "Mixed Size Originals (Scanning Different Size Documents Simultaneously)" in the User Guide.

The Copy Result is Not What was Expected

If the copy result is not what was expected, identify the symptom in the following table to perform the remedy.

Symptom	Cause	Remedy
The copy is dirty.	The document glass or the document cover is soiled.	Clean the document glass or the document cover. **Reference** • Refer to "Cleaning the Document Cover and Document Glass" (P.99).
	The document is a transparent type such as a transparency film.	If the document is transparent, dirt on the document cover may be copied. Place a white sheet of paper on top of the document when copying.
	The document is colored, rough, or a blueprint.	The paper's background color is copied. Adjust the copy density or image quality, or specify [Suppress Background].
	The document is glossy printing paper.	Glossy printing paper easily sticks to the document glass, and shadows are sometimes copied, soiling the image. Place a transparency film under the document when copying.
The copy is too dark or light.	The copy density is set to[Darken] or [Lighten].	Adjust the copy density. **Reference** • Refer to "Copy" > "Image Quality" in the User Guide.
	The document density is too light.	Adjust the copy density. **Reference** • Refer to "Copy" in the User Guide.
	The setting for [OriginalType] is inappropriate for the document.	Copy black text. If the printout is too light, select [Text] for [Original Type]. **Reference** • Refer to "Copy" > "Image Quality" in the User Guide.
The color of the document and of the copy differ.	Is the color calibration incorrect?	Execute auto calibration. **Reference** • Refer to "Executing Calibration" (P.103).
	The document type selected is not suitable.	Set the suitable value for [Original Type]. **Reference** • Refer to "Copy" > "Image Quality" > "Original Type (Selecting the Document Type)" in the User Guide.
	The image quality selected is unsuitable for the document.	Copy black text. If the printout is too light, select [Text] for [Original Type]. **Reference** • Refer to "Copy" > "Image Quality" in the User Guide.
The copy is slightly misaligned.	Paper is misaligned in the tray.	Align the paper edges, and adjust them to the tray's top corners to reload the paper. **Reference** • Refer to "Loading Paper" (P.66).

Symptom	Cause	Remedy
Part of the image is missing on the copy.	The paper is damp.	If the paper is damp, the copy image may be partially missing or unclear. Replace the paper with new one. **Reference** • Refer to "Loading Paper" (P.66).
	Folded or wrinkled paper is included in the tray.	Remove the unsuitable paper or replace all of the paper with a new one. **Reference** • Refer to "Loading Paper" (P.66).
	The document is pasted or folded.	The pasted or folded section may not be laying flat on the document glass. Place a stack of white sheets on top of the document to flatten the document against the document glass.
The copy has a stripe pattern.	The document enlargement ratio is too large.	Vertical stripes may be printed on the copies depending on the ratio. Adjust the ratio to eliminate the stripes. **Reference** • Refer to "Copy" > "Copy" > "Reduce/Enlarge (Making Enlarged/Reduced Copies)" in the User Guide
The copy is misaligned or skewed.	The document is not loaded correctly.	Load the document correctly. **Reference** • Refer to "Copy" > "Copying Procedure" in the User Guide.
	The document guides onthe document feeder are not set in the correct positions.	Load the document correctly, and align the document guides to the document. **Reference** • Refer to "Copy" > "Copying Procedure" in the User Guide.
	The paper tray is notinserted correctly.	Firmly push in the tray until it stops to set it properly. **Reference** • Refer to "Loading Paper" (P.66).
	The paper guides in Tray 5 are not set in the correctpositions.	Load the paper correctly, and align the paper guides to the paper edges. **Reference** • Refer to "Loading Paper in Tray 5 (Bypass)" (P.68).
Unable to copy with the specified size.	The document glass or the document cover is dirty.	Clean the document glass or the document cover. **Reference** • Refer to "Cleaning the Document Cover and Document Glass" (P.99).
	The document is a transparent type such as a transparency film.	Place a white sheet of paper on top of the document when copying.

Symptom	Cause	Remedy
Unable to copy with the specified size.	The document is misaligned.	Load the document correctly. **Reference** • Refer to "Copy" > "Copying Procedure" in the User Guide.
	The document guides on the document feeder are not set in the correct positions.	Load the document correctly, and align the document guides to the document. **Reference** • Refer to "Copy" > "Copying Procedure" in the User Guide.
	The document is a nonstandard size.	Specify the document size, and then copy. **Reference** • Refer to "Copy" > "Copying Procedure" in the User Guide.
	The document is folded.	Flatten the curl and load the document again. **Reference** • Refer to "Copy" > "Copying Procedure" in the User Guide.
Unable to copy in color.	[Output Color] is set to [Black & White].	Set [Output Color] to [Auto Detect] or [Color]. **Reference** • Refer to "Copy" > "Copy" > "Output Color (Selecting the Color for Copying)" in the User Guide.
The document edges are missing on the copy.	The document is larger than the printable area.	Adjust [Reduce/Enlarge] to copy thedocument smaller.
Outputs are not stapled.	The Finisher is not attached.	The Finisher is required to staple. Install the Finisher, or change the print option settings to cancel stapling.
	The number of pages to be stapled exceeds the maximum number for stapling.	You cannot staple more than 50 pages. Reduce the number of pages to 50 or fewer.

Trouble during Printing

This section describes how to resolve print problems.

Unable to Print

If you cannot print a document, identify the symptom in the following table to performthe remedy.

Symptom	Cause	Remedy
Data remains in the printer icon.	The machine is not powered on.	Switch the main power and power on.
	The network cable is disconnected from the computer.	Connect the network cable to the computer.
	The network cable is disconnected from the machine.	Connect the network cable to the machine. **Reference** • Refer to "Interface Cables" (P.21).
	The print mode is [Off-line] on the machine.	Press the <Machine Status> button to check the [Print Mode] on the [Machine Status] screen. If [Print Mode] is set to [Offline], select [On-line].
	An error occurred in the machine.	Check the error details and take an appropriate action.
	The IP address or SMB network path is not correctly set.	Set the correct IP address or SMB network path. **Note** • Refer to "Printer Environment Settings" (P.335).
	The network between the computer and machine is abnormal.	Check with your network administrator.
	The port is not enabled.	Enable the port. **Reference** • Refer to "Port Settings" (P.194) and "Loading Paper" (P.66).
	The hard disk space of the machine is insufficient.	Delete unnecessary data such as stored documents (Charge Print, Private Charge Print, and Secure Print) in folders to increase free space.
	The machine is connected to multiple computers.	Wait for a while, and then try printing again.
Non sensical characters (symbols) are printed in large numbers.	A printer driver provided by other company is used.	Use the appropriate printer driver. Check the property screen of the printer driver to confirm that your machine's name is displayed for the driver name on the [Advanced] tab.

Symptom	Cause	Remedy
The data has been sent to the machine.	The machine is out of paper.	Load paper in the machine.
	No paper is loaded for the specified paper size.	Load paper of the size specified. **Reference** • Refer to "Loading Paper" (P.66).
	Printing is interrupted by a copy operation.	Cancel the interrupting operation.
	An error occurred in the machine.	Check the error details and take an appropriate action.

The Print Result is Not What was Expected

If the print result is not what was expected, identify the symptom in the following table to perform the remedy.

Symptom	Cause	Remedy
Cannot print in color.	[Output Color] is set to [Black and White].	Set [Output Color] to [Auto Detect] or [Color].
Outputs are not stapled.	The Finisher is not installed.	The Finisher is required to staple. Install the Finisher, or change the print option settings to cancel stapling.
	The number of pages to be stapled exceeds the maximum number for stapling.	You cannot staple more than 50 pages. Reduce the number of pages to 50 or fewer.
The document is printed on a different paper size than specified.	The document size is different from the paper size loaded in the specified tray.	Change the size of paper in the tray, or change the print option to specify a tray that contains the correct sized paper.
The image on the document edges is missing on the output.	The image is larger than the printable area.	Expand the printable area of the machine, or reduce the image size on the printout.
The printed font differs from the font specified on the computer.	Font replacement is set on the print driver.	Check the font replacement table.
The printout is not offset.	The machine does not offer the Offset feature.	To output offset, the Offset Stacking Module or the Finisher is required.
The specified print options are not enabled.	The print driver for another model is used.	Install the print driver for the model.
	The required optional kit is not installed on the machine.	Check the optional components installed on the machine, and set [Installable Options] under [Configuration] in the print driver again.
The document edges are missing on the printout.	The image is larger than the printable area.	Expand the printable area of the machine, or reduce the image size on the printout.

Symptom	Cause	Remedy
The output color differs between Secure Print and Print Stored File.	This is because the print path is different. The output color of Print Stored File is reproduced by the presence or absence of dots, as with copying or faxing. On the other hand, the output color of Secure Print is reproduced using density by default, as with printing.	To closer match the color of Secure Print and files in folder, select [On] in [Image Options] > [Print Page Mode] on the [Advanced] tab of the print driver settings.
The print color differs from before.	The color calibration is incorrect.	Execute auto calibration. **Reference** • Refer to "Executing Calibration" (P.103).
Black lines are printed.	A print driver for another machine is used.	Install the print driver for your machine.

Trouble during Faxing

This section describes how to resolve fax problems.

Note

- For troubles during Internet faxing, refer to "E-mail Features Problems" (P.489).
- The Fax features are not available for some models. An optional component is required. For more information, contact our Customer Support Center.

Sending Problems

If you cannot send a fax, identify the symptom in the following table to perform the remedy.

Symptom	Cause	Remedy
A Transmission Report - Job Undelivered is output.	The fax was not sent because of an error.	Check the Transmission Results in the Transmission Report - Job Undelivered. If an error code is displayed, refer to "Error Code" (P.496).
Unable to communicate (general fax)	The phone line is not connected correctly.	The machine is equipped with connectors to which to connect phone lines.Communication is enabled only when the phone line is connected to the correct connector.When the cable connection is correct, the On-hook feature allows you to call via general lines.
	The phone dialing method is not available.	Specify the same dialing method as the one (Tone/10pps) subscribed for the machine.
	An error occurred with the phone line.	Use a telephone near the machine to check whether you can make a phone call. If the phone call is disabled, the problem is in the phone line, not in the machine.
	The destination machine is abnormal.	The data cannot be sent if the machine of the recipient is turned off, is set to "manual" receiving mode, or does not support G3 reception.Call the recipient to confirm the machine condition.
	An incorrect fax number is used.	Check the fax number and try sending again.
	The number is not for fax number.	If no peep sound is heard from the receiver when you call the number, the number is not for a fax number.
	You forgot the external access number.	When calling from an extension line, the external access number is required. When dialing, dial the external access number such as "0", and then dial the fax number. When the switchboard is changed and you cannot send faxes, try the external access number "0*" instead of "0".

Symptom	Cause	Remedy
Unable to communicate (general fax)	When calling from an abbreviated telephone number, an external access number is appended.	When calling from an abbreviated telephone number to an external line, an external access number such as "0" may be registered for the abbreviated telephone number. Confirm the telephone number of the receiver on the Transmission Report - Job Undelivered.
	You are using a feature such as the Polling feature that is not supported by the destination fax.	Confirm whether the destination fax supports the feature.
	The Authentication/ Accounting feature is being used and the fax is being sent directly from the computer.	When the Authentication/Accounting feature is used and you send a fax directly from the computer, you must set the user ID and passcode registered on the machine to the fax driver. **Reference** • For details on the Authentication/Accounting feature, refer to "Authentication and Accounting Features" (P.423). For details on how to directly send a fax from the computer, refer to "12 Computer Operations" > "Sending Fax" in the User Guide.
Unable to communicate (IP fax (SIP))	The IP address is incorrect.	Set a correct IP address, subnet mask, and gateway address on the machine.
	The SIP user name is incorrect.	Set a correct SIP user name in the machine.
	The correct IP address of a SIP server is not set in the machine.	Set a correct IP address of the SIP server on the machine.
	The specified SIP server in a network is not active.	Consult your network administrator on the SIP server condition.
	Registration of the machine information to a SIP server failed.	Turn the machine off and then on.

Symptom	Cause	Remedy
Unable to communicate (IP fax (SIP))	The IP fax (SIP) machine of the recipient is abnormal.	The data cannot be sent if the IP fax (SIP) machine of the recipient is turned off. Call the recipient to confirm the machine condition.
	The method for specifying the recipient is incorrect.	Specify the following recipient information: • Neither a SIP server nor a VoIP gateway is used. Specify "SIP user name@IP address" for [Recipient]. • Only a SIP server is used. Specify "SIP user name" or "telephone number" in [Recipient]. • Only VoIP gateway is used Specify "telephone number" in [Recipient]. • Both SIP server and VoIP gateway are used. Specify "SIP user name" or "telephone number" in [Recipient].
	You are using a feature such as the polling feature that is not supported by the destination fax.	Confirm whether the destination fax supports the feature.
	The authentication/ accounting feature is being used and the fax is being sent directly from the computer.	When the authentication/accounting feature is used and you send a fax directly from the computer, you must set the user ID and passcode registered on the machine to the fax driver. **Reference** • For details on the authentication/accounting feature, refer to "Authentication and Accounting Features" (P.423). For details on how to directly send a fax from the computer, refer to "13 Computer Operations" > "Sending Fax" in the User Guide.
	IP fax (SIP) is being received.	The number of simultaneous connections for IP fax (SIP) is one. The machine cannot send and receive an IP fax (SIP) at the same time. Wait until the receiving completes, and then try sending again.
Unable to communicate (IP fax (SIP))	The network relay device such as a switch, router, and firewall cannot go through the port of the machine.	Enable the port for IP fax (SIP) of the network relay device.
	The IP filter setting of the machine is incorrect.	Add the IP address of the SIP server to the permitted IP address of the machine in the environment where the SIP server is used. Set [IP Filtering] under [Properties] tab > [Security] using CentreWare Internet Services.
	The Ethernet cable has been unplugged for more than one minute.	When Register recovery on the SIP server is completed, the registration succeeds. No measure is required.

Symptom	Cause	Remedy
Unable to communicate (IP fax (SIP) via VoIP gateway)	The registration of VoIP is incorrect.	Register the correct VoIP gateway on the machine.
	The specified VoIP gateway in a network is not active.	Consult your network administrator on the VoIP gateway condition.
	The settings on the VoIP gateway are incorrect.	Consult your network administrator on the VoIP gateway settings.
	The destination G3 fax machine is abnormal.	The data cannot be sent if the G3 fax machine of the recipient is turned off. Call the recipient to confirm the machine condition.
IP fax (SIP) transmission takes long time.	The priority of the IP packet, which is sent from the machine, on the network relay device (such as a switch and router) is low because the QoS setting of the machine is invalid.	Increase the value for [Prioritize IP Packets] according to your network environment. **Reference** • For more information on [Prioritize IP Packets], refer to "Prioritize IP Packets / Prioritize IP Packets (Ethernet 1), Prioritize IP Packets (Ethernet 2)" (P.212).
	A large amount of communication data loss occurs because the queue (buffer) assigned to each QoS of the network relay device (such as a switch and router) is low.	Set an appropriate parameter on the network relay device for your network environment.
	A large amount of communication data loss occurs because the communication rates (10M/ 100M/1000M) differ on two sides of the network relay device (such as a switch and router).	Use the same communication speed within the network.
	A large amount of communication data loss occurs because the communication parameters (such as input gain, output attenuation, echo setting) of the VoIP gateway are inappropriate for the network environment.	Set appropriate communication parameters on the VoIP gateway for your environment.
	IP fax (SIP) machine is connected to the data network where the telephone and data networks are operated separately.	Configure the QoS setting for the entire network environment and control traffic. Set [Prioritize IP Packets] for QoS of the machine. **Reference** • For more information on [Prioritize IP Packets], refer to "Prioritize IP Packets / Prioritize IP Packets (Ethernet 1), Prioritize IP Packets (Ethernet 2)" (P.212).

Symptom	Cause	Remedy
Communications other than IP fax (SIP) become slow while IP fax(SIP) transmission is executed.	The priority of IP packet, which is sent from the machine, on the network relay device (such as a switch and router) becomes higher than necessary because the QoS setting of the machine is invalid. Or, large amounts of buffer space is occupied.	Decrease the value for [Prioritize IP Packets] according to your network environment. **Reference** • For more information on [Prioritize IP Packets], refer to "Prioritize IP Packets / Prioritize IP Packets (Ethernet 1), Prioritize IP Packets (Ethernet 2)" (P.212).
	IP fax (SIP) machine is connected to the telephone network where the telephone and data networks are operated separately.	Configure QoS setting for the entire network environment and control traffic. Set [Prioritize IP Packets] for QoS of the machine. **Reference** • For more information on [Prioritize IP Packets], refer to "Prioritize IP Packets / Prioritize IP Packets (Ethernet 1), Prioritize IP Packets (Ethernet 2)" (P.212).
The image quality is poor.	The document glass is dirty.	Clean the document glass. **Reference** • Refer to "Cleaning the White Chute and Constant Velocity Transport Glass" (P.100).
	The fax density is inappropriate.	Adjust the fax density. **Reference** • Refer to "4 Fax" > "Fax/Internet Fax" in the User Guide.
	The sender's machine has a problem.	Confirm with the sender. **Note** • Image quality may be affected by a problem of the sender's machine, not just by a problem of the machine.

Receiving Problems

If you cannot receive a fax, identify the symptom in the following table to perform the remedy.

Symptom	Cause	Remedy
Unable to communicate(general fax)	The phone line is not connected correctly.	The machine is equipped with connectors to which to connect phone lines. Communication is enabled only when the phone line is connected to the correct connector. When the cable connection is correct, the On-hook feature allows you to call via general lines.

Symptom	Cause	Remedy
Unable to communicate(general fax)	An error occurred with the phone line.	Use a telephone near the machine tocheck whether you can make a phone call.If the phone call is disabled, the problem is in the phone line, not in the machine.
	The machine is turned off.	The machine cannot receive a fax when turned off. Switch the main power and power on.
	No paper is set.	Load paper in the machine to receive faxes.
	Paper is jammed.	Follow the instructions displayed on the control panel to remove the jammed paper. **Reference** • Refer to "Paper Jams" (P.612).
	The machine is in the System Administration mode.	The machine cannot receive a fax in the System Administration mode. Exit the System Administration mode.
	A machine password has been set.	When a machine password has been set, the machine accepts only data or polling fax sent with the correct machine password in F code.
	The machine is in manual receive mode.	Receive the fax manually, or set [FaxReceiving Mode] to [Auto Receive]. **Reference** • Refer to "Fax Receiving Mode" (P.130).
	The machine is in manual send mode.	To use Fax information service, set the reception mode to [Manual Send] on the on-hook screen, enter an information code, and press the <Start> button.
	The document is notcorrectly loaded on thesender's machine.	Check with the sender. **Note** • Image quality may be affected by a problem of the sender's machine, not just by a problem of the machine.
Unable to communicate (IP fax (SIP))	The IP address is incorrect.	Set a correct IP address, subnet mask, and gateway address on the machine.
	The correct IP address of a SIP server is not set in the machine.	Set a correct IP address of the SIP server in the machine.
	The specified SIP server in a network is not active.	Consult your network administrator on the SIP server condition.

Symptom	Cause	Remedy
Unable to communicate(general fax)	Registration of the machine information to a SIP server failed.	Turn the machine off and then on.
	The machine is turned off.	The machine cannot receive a fax when turned off. Turn the machine on.
	The machine is in the System Administration mode.	The machine cannot receive a fax in the System Administration mode. Exit the System Administration mode.
	A wrong machine password has been set.	When a machine password has been set, the machine accepts only data or polling fax sent with the correct machine password in F code.
	IP fax (SIP) is being sent.	The number of simultaneous connection for IP fax (SIP) is one. The machine cannot send and receive an IP fax (SIP) at the same time.Wait until the sending completes, and then ask the sender to send again.
	The network relay device such as a switch, router, and firewall cannot go through the port of the machine.	Enable the port for IP fax (SIP) of the network relay device.
	The IP filter setting of the machine is incorrect.	Add the IP address of the SIP server to the permitted IP address of the machine in the environment where the SIP server is used.Set [IP Filtering] under [Properties] tab > [Security] using CentreWare Internet Services.
	The Ethernet cable has been unplugged for more than one minute.	When Register recovery on the SIP server is completed, the registration succeeds. No measure is required.
Unable to communicate (IP fax (SIP) via a VoIP gateway)	The registration of VoIP is incorrect.	Register the correct VoIP gateway on the machine.
	The specified VoIP gateway in a network is not active.	Consult your network administrator on the VoIP gateway condition.
	The settings on the VoIP gateway are incorrect.	Consult your network administrator on the VoIP gateway settings.

Symptom	Cause	Remedy
IP fax (SIP) transmission takes long time	The priority of the IP packet, which is sent from the machine, on the network relay device (such as a switch and router) is low because the QoS setting of the machine is invalid.	Increase the value for [Prioritize IPPackets] according to your network environment. **Reference** • For more information on [Prioritize IP Packets], refer to "Prioritize IP Packets / Prioritize IP Packets (Ethernet 1), Prioritize IP Packets (Ethernet 2)" (P.212).
	A large amount of communication data loss occurs because the queue (buffer) assigned to each QoS of the network relay device (such as a switch and router) is low.	Set an appropriate parameter on the network relay device for your network environment.
	A large amount of communication data loss occurs because the communication rates (10M/ 100M/1000M) differ on two sides of the network relay device (such as a switch and router).	Use the same communication speed within the network.
	A large amount of communication data loss occurs because the communication parameters (such as input gain, output attenuation, echo setting) of the VoIP gateway are inappropriate for the network environment.	Set appropriate communication parameters on the VoIP gateway for your environment.
	IP fax (SIP) machine isconnected to the data network where the telephone and data networks are operated separately	Configure the QoS setting for the entire network environment and control traffic. Set [Prioritize IP Packets] for QoS of the machine. **Reference** • For more information on [Prioritize IP Packets], refer to "Prioritize IP Packets / Prioritize IP Packets (Ethernet 1), Prioritize IP Packets (Ethernet 2)" (P.212).

Symptom	Cause	Remedy
Communications other than IP fax (SIP) become slow while IP fax (SIP) transmission is executed.	The priority of IP packet, which is sent from the machine, on the network relay device (such as aswitch and router) becomes higher than necessary because the QoS setting of the machine is invalid or a large amounts of buffer space is occupied.	Decrease the value for [Prioritize IP Packets] according to your network environment. **Reference** • For more information on [Pririotize IP Packets], refer to "Prioritize IP Packets / Prioritize IP Packets (Ethernet 1), Prioritize IP Packets (Ethernet 2)" (P.212).
	IP fax (SIP) machine is connected to the telephone network where the telephone and data networks are operated separately.	Configure QoS setting for the entire network environment and control traffic. Set [Prioritize IP Packets] for QoS of the machine. **Reference** • For more information on [Prioritize IP Packets], refer to "Prioritize IP Packets / Prioritize IP Packets (Ethernet 1), Prioritize IP Packets (Ethernet 2)" (P.212).
The image quality is poor.		Copy a document. If the image quality is poor, replace the drum cartridge with a new one.
	The document glass of the sender's machine is dirty.	Check with the sender **Note** • Image quality may be affected by a problem of the sender's machine, not just by a problem of the machine.
	The resolution setting on the sender's machine is too low.	Check with the sender. **Note** • Image quality may be affected by a problem of the sender's machine, not just by a problem of the machine.

<table>
<tr><th>Symptom</th><th>Cause</th><th>Remedy</th></tr>
<tr><td>The one-page document is received split into multiple pages.</td><td>When scanned on the sender's machine, the document was enlarged for some reason.</td><td>You can set the machine to process such a document by using the Auto Reduce on Receipt feature and a border limit value for page splitting. According to the setting combination specified, the received document is printed as follows:
<table>
<tr><th></th><th>Auto Reduce on Receipt ON</th><th>Auto Reduceon Receipt OFF</th></tr>
<tr><td>Within border limit</td><td>Automatic ally reduces image size and prints it on one page.</td><td>Trims the portion exceeding standard siz e and then prints.</td></tr>
<tr><td>Exceeding border limit</td><td>Splits data at equal ratio and prints.</td><td>-</td></tr>
</table>
Reference
Refer to "Border Limit" (P.251), or "Auto Reduce On Receipt" (P.251).</td></tr>
<tr><td>Although the Folder Selector feature is set, however, the received document is printed, and cannot be stored in the folder.</td><td>An unregistered folder is specified on the Folder Selector feature.</td><td>When using the Folder Selector feature, specify a registered folder. If an unregistered folder is selected, the received document cannot be stored in the folder, and will be automatically printed.
Reference
For information on how to register the folder, refer to "Create Folder" (P.276). For information on the setting of the Folder Selector, refer to "Fax Received Options" (P.255).</td></tr>
</table>

Trouble during Scanning

This section describes how to resolve scan problems.

Note

- The Scan features are not available for some models. An optional component is required. For more information, contact our Customer Support Center.

Unable to Scan with the Machine

If you cannot scan with the machine, identify the symptom in the following table to perform the remedy.

Symptom	Cause	Remedy
The document is not correctly fed from the document feeder.	The document is too small.	The minimum size of the document that can be loaded on the document feeder is 125 x 85 mm (Standard size: A5, A5□). **Reference** • Refer to "Scan" > "Scanning Procedure" in the User Guide.
	The document type is unsuitable.	The document feeder does not feed irregular sized documents, business cards, transparencies, or thin documents. In addition, the document feeder does not feed documents with sticky tags, paper clips, or adhesive tape. **Reference** • Refer to "Scan" > "Scanning Procedure" in the User Guide.
	The document guides are set in incorrect positions.	Adjust the document guides to the document. **Reference** • Refer to "Scan" > "Scanning Procedure" in the User Guide.
	A piece of torn paper remains in the document feeder.	Open the document feeder cover, and remove the piece. **Reference** • Refer to "Document Jams" (P.623).
	Documents of mixed sizes are loaded.	When loading documents of mixed sizes, be sure to set [Mixed Size Originals] to [On]. Otherwise, a paper jam will occur. **Reference** • Refer to "Scan" > "Layout Adjustment" in the User Guide.

Unable to Import Scanned Documents to the Computer

If you cannot import scanned documents to the computer, identify the symptom in the following table to perform the remedy.

Symptom	Cause	Remedy
Unable to find the scanner.	The machine is not turned on.	Switch the main power and power on.
	The network cable is disconnected from the computer.	Connect the network cable to the computer.
	The network cable is disconnected from the machine.	Connect the network cable to the machine. **Reference** • Refer to "Interface Cables" (P.21).
	The network between the computer and machine is abnormal.	Check with your network administrator.
Unable to open a folder.	The folder is unregistered.	Register the folder. **Reference** • Refer to "Create Folder" (P.276).
	The folder passcode has been forgotten.	The passcode cannot be retrieved. Set the passcode to [Off], and then set the passcode again. **Reference** • Refer to "Create Folder" (P.276).
Unable to import data from the scanner because of a TWAIN transmission error.	The scan driver is not installed.	Install the scan driver.
Operation terminates during scanning.	The file size is too large.	Lower the resolution, and import again. **Reference** • Refer to "Scan" > "Layout Adjustment" in the User Guide.

Unable to Send a Scanned Document over the Network (FTP/SMB)

If you cannot send a scanned document over the network, identify the symptom in the following table to perform the remedy.

Symptom	Cause	Remedy
A Transmission Report - Job Undelivered is output.	Unable to transmit because of the error.	Check the Transmission Results in theTransmission Report - Job Undelivered. If an error code is displayed, refer to "Error Code" (P.496).

Symptom	Cause	Remedy
Unable to send data over the network.	The server is not correctly specified.	Correctly specify the server.
	The save destination is not correctly specified.	Correctly specify the save destination.
	When SMB is selected, the shared name is not correctly specified.	Correctlpecify y sthe shared name.
	When SMB (UNC Format) is selected, the save destination is not correctly specified.	Correctly specify the save destination.
	The login name is notentered correctly.	Correctly enter the login name.
	The password is notcorrectly entered.	Correctly enter the password.
	The time set on the machine does not agree with that of Windows, when SMB transmission is performed to Windows Server 2003, Windows Server 2008, Windows Server 2012, Windows Server 2012 R2, Windows 8 or Windows 8.1.	Synchronize the time settings of the machine and Windows.
	On Windows Server 2003, Windows Server 2008, Windows Server 2012,, Windows Server 2012 R2, Windows 8, or Windows 8.1 users who do not set a password cannot use SMB transmission.	Follow the steps below to change thesettings of network access: **1.** Start Windows, and select [Control Panel] > [Administrative Tools] > [Local Security Policy]. **2.** Select [Security Settings] > [Local Policies] > [Security Options]. **3.** Change [Account: Limit local account use of blank passwords to console logon only] to [Disabled].
	Is the root of the DFS name space (\\Domain name\Shared name) specified with more than three characters?	Specify a DFS name space with a root comprised of less than four characters.
	The access right to the specified storage location is not set correctly.	Set the access right to the specified storage location correctly so that you can read and write the files and folders.
	The SMB port number is blocked.	Check the destination server, the router between the machine and the server, virus scanning software on the destination server, and firewall to confirm whether the SMB port is blocked or not.

Unable to Send E-mail

If you cannot send a scanned document using the E-mail feature, identify the symptom in the following table to perform the remedy.

Symptom	Cause	Remedy
A Transmission Report - Job Undelivered is output.	Unable to transmit because of an error.	Check the Transmission Results in the Transmission Report - Job Undelivered. If the error code is displayed, refer to "Error Code" (P.496).
Unable to send e-mail.	The mail address is incorrect.	Enter the correct mail address.
	The data size exceeded the maximum e-mail size.	Change the maximum e-mail size, or lower the resolution. **Reference** • Refer to "Maximum Total Data Size" (P.264), or "Scan" > "Layout Adjustment" in the User Guide.

The Image is not What was Expected

If the image is not what was expected, identify the symptom in the following table to perform the remedy.

Symptom	Cause	Remedy
The image is dirty.	The document glass or the document cover is soiled.	Clean the document glass or the document cover. **Reference** • Refer to "Cleaning the Document Cover and Document Glass" (P.99).
	The document is atransparent type such as a transparency film.	If the document is transparent, dirt on the document cover may be copied on the image. Place a white sheet of paper on top of the document when scanning.
	The document is colored, rough, or a blueprint.	Adjust the copy density or image quality when scanning.
	The document is glossy printing paper.	Glossy printing paper easily sticks to the document glass, and shadows are sometimes scanned, soiling the image. Place a transparency film under the document when scanning.
The image is too dark, or too light.	The scan density is set to [Darken] or [Lighten].	Adjust the scan density. **Reference** • Refer to "Scan" > "Advanced Settings" in the User Guide.
	The setting for [OriginalType] is inappropriate for the document.	Select the image quality appropriate for the document. **Reference** • Refer to "Scan" > "Advanced Settings" in the User Guide.

Symptom	Cause	Remedy
Part of the image is missing.	The document is pasted or folded.	The pasted or folded section may not be laying flat on the document glass. Place a stack of white sheets on top of the document to flatten the document against the document glass.
The image is not the desired size.	The document glass or the document cover is dirty.	Clean the document glass or the document cover. **Reference** • Refer to "Cleaning the Document Cover and Document Glass" (P.99).
	The document is a transparent type such as a transparency film.	Place a white sheet of paper on top of the document when scanning.
	The document is misaligned.	Load the document correctly. **Reference** • Refer to "Scan" > "Scanning Procedure" in the User Guide.
	The document guides on the document feeder are not set in the correct positions.	Load the document correctly, and align the document guides to the document. **Reference** • Refer to "Scan" > "Scanning Procedure" in the User Guide.
	The document is a non-standard size.	Specify the document size. **Reference** • Refer to "Scan" > "Scanning Procedure" in the User Guide.
	The document is folded.	Flatten the curl and load the document again. **Reference** • Refer to "Scan" > "Scanning Procedure" in the User Guide.
The image is not scanned in color.	[Color Scanning] is set to [Black & White] or [Grayscale].	Set [Color Scanning] to [Color]. **Reference** • Refer to "Scan" > "E-mail" in the User Guide.
The image is coarse.	The resolution is too low.	Set the resolution higher. **Reference** • Refer to "Scan" > "Layout Adjustment" in the User Guide.
	Image is saved with high compression.	Select a lower compression ratio in [Quality/File Size]. **Reference** • Refer to "Scan" > "E-mail Options/Filing Options" in the User Guide.
Black-and-white gradation is not reproduced properly.	[Black & White] is selected for [Color Scanning].	Set [Color Scanning] to [Grayscale]. **Reference** • Refer to "Scan" > "E-mail" in the User Guide.

Network-related Problems

This section describes how to resolve network related problems.

When using SMB

When SMB is used, identify the symptom in the following table to perform the remedy.

When you cannot communicate with other SMB machines

Cause	Check point	Remedy
If [Auto Master Mode] of SMB is set to [On], the number of machines whose information can be stored is limited. The number depends on the network environment.	The machine or other SMB machines cannot be searched from the Network Computers icon.	Confirm the setting of [Auto Master Mode] of SMB. If the setting is enabled, change it to [Off].

When using TCP/IP

The possible causes, check points, and remedies when using TCP/IP (LPD) are as follows:

Windows Vista, Windows 7, Windows 8, Windows 8.1, Windows Server 2003, Windows Server 2008, Windows Server 2008 R2, Windows Server 2012, or Windows Server 2012 R2

■ When you cannot print

Cause	Check point	Remedy
The IP address is incorrect.	Request your network administrator to check the machine's IP address.	Set a correct IP address on the machine.
The volume of the print data sent in an instruction from a computer exceeded the maximum receivable volume when the LPD spool is set to memory spool.	Confirm the memory amount for the LPD spool and the volume of the print data transmitted by an instruction.	If the one file of print data exceeds the memory amount, divide the file not to exceed the amount.
		If the print data is divided into multiple files and exceeds the memory amount, decrease the number of files not to exceed the amount.

Cause	Check point	Remedy
An unrecoverable error occurred during the printing process.	Confirm whether any error messages are displayed on the control panel.	Restart the machine. Wait until the screen completely goes out to switch on the machine power.
The machine is not set to th etransport protocol corresponding to the computer.	Confirm the transport protocol selected on the machine.	Select the transport protocol corresponding to the computer.
The machine is trying to process a data format that does not match the data format of the print data transmitted from a computer.	-	Set not to output Ctrl-D.

■ When print result is not what was expected

Cause	Check point	Remedy
Selected printer language on the machine does not match the printer language of the print data.	Confirm the selected printer language on the machine and the printer language of the print data.	Select the printer language on the machine to match the print data.
The computer is not using the print driver supplied with the machine (is using another company's print driver).	Confirm whether the print driver on the computer is the one supplied with the machine.	On the computer, select the print driver supplied with the machine. If the print driver is not listed for selection, install the print driver and then select it. Operation is not guaranteed if another company’s print driver is used.

Mac OS X 10.6, Mac OS X 10.7 Lion, OS X 10.8 Mountain Lion, OS X 10.9 Mavericks, and OS X 10.10 Yosemite

■ When you cannot print

Cause	Check point	Remedy
The LPD port is not activated.	Confirm whether the LPD port is activated.	When printing with a printer detected by using Bonjour, Select the [Enabled] check box of [LPD] to activate the port.

CentreWare Internet Services Problems

The possible symptoms and remedies for problems when using CentreWare Internet Services are as follows:

Symptom	Remedy
Cannot connect to CentreWare Internet Services.	Is the machine working properly? Check whether the machine is turned on.
	Is the Internet Services (HTTP) port activated? Print a Configuration Report to confirm.
	Is the Internet address correctly entered?Confirm the Internet address again. If the problem persists, enter an IP address to connect to CentreWare Internet Services.
	Is a proxy server being used?Depending on the proxy server, connections may not be possible. Set the browser to [Not using proxy server] or set that particular address to [Not using a proxy server].
The [Please wait] message is continuously displayed.	Wait for a while as instructed.If the status does not change, click the [Refresh] button. If this does not impart any effect, confirm whether the machine is operating correctly.
The [Refresh] button is not functioning. Selecting the menu on the left frame does not update the right frame contents.	Old information may be cached on your web browser. Clear all the information cached on the web bowser. Your browser may not support Centreware Internet Services.
The screen display isdistorted.	Change the window size for the browser.
The latest information is notdisplayed.	Click the [Refresh] button.
Characters are not correctly displayed.	Use language command.
Pressing [Apply] does not apply the new settings.	Are the entered values correct? If a value outside of the permitted range is entered, the update will automatically be made within the range.
	This may occur when the control panel is being operated or the operation has just been completed. When the automatic reset function is set, any setting configure with CentreWare Internet Services is not applied until setting the time set for automatic reset. Wait until then.
	The machine is in the Sleep mode. Press the <Power Saver> button on the control panel of the machine to exit the Power Saver mode.
When you click [Apply], amessage such as “The server has returned ineffective or unrecognizable response” or “No data” is displayed on the browser.	Is the password correct? The entries for Password and Confirm Password do not match. Enter the correct password.
	Restart the machine.
Cannot delete jobs.	Wait for a while, and click [Refresh].

E-mail Features Problems

The possible symptoms and remedies for problems when using E-mail Notification Service, the Print E-mail feature, the E-mail service, and Internet Fax service as follows:

Syptom	Remedy
Cannot receive e-mail (Print E-mail, Internet Fax).	Is the e-mail address for the machine configured?
	Is [Receive E-mail] set to [Enabled]?
	Are settings such as the IP addresses for the SMTP server and POP3 server (if POP3 is selected as the incoming mail protocol) configured correctly?
	Are the POP3 user name and password entered correctly?
	Is [Domain Filtering] set? Confirm whether your own domain is set to [Allow Domains], on CentreWare Internet Services.
	Are the SMTP server and/or POP server operating properly? Consult your network administrator.
Cannot transmit e-mail (Email Notification Service, Internet Fax, and Email).	Is the E-mail address for the machine configured?
	Is [E-mail Notification Service] set to [Enabled]? (For E-mail Notification Service)
	Is [Send E-mail] set to [Enabled]?
	Is the IP address for the SMTP server configured correctly?
	Are the settings for notification of transmission configured correctly? (for E-mail Notification Service) Confirm the settings on the [Properties] tab of CentreWare Internet Services.
	Is the destination address entered correctly?
	Is the SMTP server operating properly? Consult your network administrator.

Internet/Intranet Connection Problems

The possible causes and remedies for problems when connecting to the Internet or intranet are as follows:

When connection to the Internet/Intranet fails

Cause	Remedy
The Authentication feature used on the remote server is not supported by the machine.	Only Basic Authentication is supported by the machine. The machine does not support NTLM/digest. For security purposes, change to the Authentication feature using SSL.
The remote linkage services used does not support the model or accessories of the machine.	Purchase products/models/accessories supported by the remote linkage services.

Cause	Remedy
The IP address is incorrect.	Confirm the IP address. If the IP address is incorrect, either set a static IP address or resolve the IP address using DHCP or AutoIP.
The IP gateway address is incorrect.	Set the correct IP gateway address when connecting to the proxy server, or to a Web server via the IP gateway.
The subnet mask is incorrect.	Set the correct subnet mask corresponding to your environment.
The DNS server address is incorrect.	Confirm the DNS server address.
The DNS server selected cannot resolve the address.	Select a DNS server that can resolve the address. • When connecting via the proxy server Set the IP address of a DNS server that can resolve the address of the proxy server. • When not connecting via the proxy server Set the IP address of a DNS server that can resolve the destination address.
The address of the address that does not use a proxy server is incorrect.	Confirm whether only addresses that do not use a proxy server are set. Even if addresses not through a proxy server are specified using the FQDN, if a server is directly accessed using its IP address, the registered server is not excluded. Set the address not to use a proxy server. Likewise, even if you directly specify an address that does not use a proxy server, if a server is accessed with the FQDN, the registered server is not excluded. Set an IP address with the FQDN not to use a proxy server.
The desired server, or theproxy server is down.	Confirm whether the desired server or the proxy server is operating correctly.
The network cable is not connected, or broken.	Confirm whether the network cable is correctly connected. We recommend using a spanning-tree configuration, with which network disconnection rarely occurs.
Cannot communicate because of overloading of the server application.	Wait for a while and try accessing again.
An error occurs that is not displayed on the control panel.	Even though an error occurs during background processing, no message appears on the control panel. Display the [Job Status] screen or print the Job History Report to confirm the result.
Cannot access the proxy server, firewall, or Web server as a result of access control.	The following types of access control are used. Confirm the configured access control. • Address (port) restriction • SSL restriction • User access restriction (including access right levels) • Content block • Scheme restriction (cannot use HTTP etc.) • Transfer data size restriction • Method restriction (cannot use POST etc.) • HTTP header restriction (only accepting specified browsers etc.) • Time restriction (only available during a specific period of time etc.)

When connection to a desired Web server fails

Cause	Remedy
The setting to use the proxy server is not configured.	In the environment using the proxy server, you must configure the machine to use the proxy server to connect to a desired Web server. Make sure that you configure the settings to use the proxy server.
The setting to use a proxy server is configured even though the environment doesnot use a proxy server.	In an environment that does not use a proxy server, such as when connecting to an intranet, do not make the settings to use the proxy server.
The proxy server address isincorrect.	When the settings to use a proxy server are configured, you cannot connect to a desired Web server only if the IP address of the proxy server is correct. Set the correct IP address of the proxy server.
When the proxy server access requires authentication, you cannot connect to the server because the user name or password is incorrect.	Set the user name and password on the machine that allow connection to the proxy server.

IPv4 and IPv6 Connection Problems

The possible causes and remedies for problems when using an IPv4 or IPv6 address are as follows:

Unable to connect using an IPv4 address

Symptom	Remedy
When 0 (zero) is prepended to the head of a value for the IPv4 address (for example:192.0.2.010), connection fails.	Do not prepend 0 (zero) to each value of an IPv4 address.

Unable to connect using an IPv6 address

Symptom	Remedy
You cannot connect to the machine with the link-local address.	When you specify the machine's link-local address, a scope ID must be appended to the address. For example, when you use Internet Explorer 7 on Windows Vista to access the address "fe80::203:baff:fe48:9010", you must append the Ethernet adapter local area connection number (for example, 8) for Windows Vista to the address as follows: fe80::203:baff:fe48:9010 % 8
The machine cannot connect to a computer running Windows OS that supportsIPv6.	Assign a static IPv6 address to the computer running Windows OS that supports IPv6.Then, register the IPv6 address on the machine as host address to allow communication.

Symptom	Remedy
A device outside the router cannot be searched.	When searching for a device outside the router via SMB, directly specify the address. Multicasting is supported only within a local link (FF02::1).
When SSL is enabled on CentreWare Internet Services, even if you specify "http://[IPv6 address]", you are not redirected to "https://[IPv6 address]".	When SSL is enabled, directly specify "https://[IPv6 address]".

Unable to print using an IPv6 address

Symptom	Remedy
On an IPv6 network without a DNS server, a computer running Windows OS that supports IPv6 cannot be connected to a Windows shared printer.	Register the computer name of the machine on the "hosts" file stored on the computer running Windows OS that supports IPv6. For example, register in the following file: C:\Windows\system32\driver\etc\hosts

Unable to scan using an IPv6 address

Symptom	Remedy
When the machine is configured with only a linklocal address, file transfer fails.	Assign a global address to the machine.
When you specify the computer name on a storage destination server of the Scan to PC (SMB) service inan IPv6 environment without a DNS server, scan data cannot be transferred.	Scan data cannot be transferred with SMB if a destination server is specified using the computer name. Use the IPv6 format to specify the server.
The machine does not operate correctly if the Internet Fax direct destination is specified in IPv6 address literal format. Example: csw@[ipv6:2001:db8::1]	In an IPv6 environment, use a DNS server and specify a destination using a fully qualified domain name (FQDN).
The machine does not operate correctly if the mail address for the E-mail service is specified in IPv6 address literal format. Example: csw@[ipv6:2001:db8::1]	In an IPv6 environment, use a DNS server and specify an emailaddress using the FQDN.

Other problems on IPv6 addresses

Symptom	Remedy
In an IPv6 network with no DNS server installed, authentication fails if an SMB authentication server is specified using the computer name.	Directly specify the IPv6 address to specify the computer name of an authentication server.
IPv6 addresses are not correctly recorded on output job logs.	Use an IPv4 network for correct logging.

Media Print - Text Trouble

The possible symptoms, causes, and remedies for problems when using Media Print - Text are as follows.

Symptom	Cause	Remedy
[Media Print - Text] is not displayed on the Services Home screen.	The optional software, USB Memory Kit (optional) is not recognized by the machine.	Properly set the software option, or disconnect the USB cable, and then securely insert the USB cable into the connector.

Media Print - Photos Trouble

The possible symptoms, causes, and remedies for problems when using Media Print - Photos are as follows:

Symptom	Cause	Remedy
[Media Print - Photos] is not displayed on the Services Home screen.	The USB Memory Kit (optional) is not recognized by the machine.	Properly set the software option, or disconnect the USB cable and then securely insert the USB cable into the connector.
A blank sheet of paper is output.	Files that cannot be printed (image files in other than DCF1.0 format) are included among the files specified for printing.	Files that cannot be printed (image files in other than DCF1.0 format) are not printed with index printing. Specify printing again, excluding the images not displayed for index printing. **Note** • Editing or saving DCF 1.0-format image files on a computer makes those files' format other than DCF1.0.

Error Code

This section describes error codes.

An error message and error code (***-***) are displayed on the touch screen if printing terminated abnormally because of an error, or a malfunction occurred in the machine.

For faxing, an error code is also displayed on an Activity Report and a Transmission Report - Job Undelivered.

Refer to the error codes in the following table to resolve problems.

Important

- If an error code is displayed, any print data remaining in the machine and information stored in the machine's memory is not secured.

If an error code is displayed that is not listed in the following table, or if you cannot resolve an error despite following the instructions described in the table, contact our Customer Support Center. The contact number is printed on the label or card attached to the machine.

Error Code	Cause and Remedy
003-311 003-318 003-319 003-320 003-321 003-322 003-323 003-324 003-325 003-326 003-327 003-328 003-329 003-330 003-331 003-332 003-333 003-334 003-335 003-336 003-337 003-338 003-339 003-340 003-341 003-342 003-343 003-344 003-345 003-346	**[Cause]** An error occurred. **[Remedy]** Switch off the machine power, make sure that the touch screen is blank, and then switch on the machine power. If the same message is displayed again, contact our Customer Support Center.

Error Code	Cause and Remedy
003-700	**[Cause]** Too many documents are set in the document feeder after clearing the paper jam. **[Remedy]** Check the output, and then replace the documents that have not been copied yet.
003-701	**[Cause]** A digital code is embedded in the document to restrict duplication. **[Remedy]** Use a document in which no digital code is embedded.
003-702	**[Cause]** You tried to copy sides 1 and 2 of a document simultaneously specifying different Reduce/Enlarge ratio for each side. **[Remedy]** Specify the same Reduce/Enlarge ratio for both sides.
003-703	**[Cause]** The Calibration Chart is not detected correctly. **[Remedy]** Place the Calibration Chart properly.
003-704	**[Cause]** An error is found in the calibration pattern read, and the machine may be out of order. **[Remedy]** Execute the calibration again. If the error is not still resolved, contact our Customer Support Center.
003-705	**[Cause]** Copying is started before the machine exits the Power Saver mode and detects the change for the tray size, when the paper size set in the tray that has been changed during the Power Saver mode. **[Remedy]** Cancel copying, and perform the operation for copying again.
003-750	**[Cause]** Unable to store any documents using the 2 Sided Book Copying feature. **[Remedy]** Check the 2 Sided Book Copying settings. **Reference** • Refer to "3 Copy" > "Layout Adjustment" in the User Guide.
003-751	**[Cause]** Unable to process the document because the specified scan area is too small. **[Remedy]** Increase the resolution or scan area.
003-752	**[Cause]** A mix sized document was to be scanned at 600 dpi in Color/2 sided. **[Remedy]** Set [Resolution] to [400dpi] or lower, and try scanning again.
003-753	**[Cause]** A mix sized document was to be scanned at high resolution, 2 sided. **[Remedy]** Set [Resolution] to [200dpi], and scan the document again.
003-754 003-755	**[Cause]** An error occurred in the document feeder. **[Remedy]** Execute the job again.
003-756	**[Cause]** The faxed document is completely blank. **[Remedy]** Check whether the document is blank or whether the side of the document to be faxed is loaded correctly.
003-757	**[Cause]** A mix sized document was to be scanned at high resolution, 2 sided. **[Remedy]** Set [Resolution] to [300dpi] or lower, and scan the document again.

Error Code	Cause and Remedy
003-760	**[Cause]** An incompatible combination of feature is specified for document scan conditions. **[Remedy]** Confirm the selected options.
003-761	**[Cause]** The paper size of the tray selected for auto tray differs from the paper size of the tray selected for Auto Paper selection. **[Remedy]** Change the paper size for the tray, or change the [Paper Type Priority] settings.
003-763	**[Cause]** An error occurred when reading the Calibration Chart. **[Remedy]** Place the Calibration Chart correctly on the document glass. **Reference** • Refer to "Executing Calibration" (P.103).
003-780	**[Cause]** Failed to compress the scanned document. **[Remedy]** Reduce the resolution or the ratio for [Reduce/Enlarge] to decrease the data size, or split the data to send it separately.
003-795	**[Cause]** When enlarging/reducing a scanned document to the paper size specified, the reduction/enlargement ratio exceeds the allowed range. **[Remedy]** Take one of the following measures: • Manually enter a reduction/enlargement ratio. • Change the paper size.
005-275 005-280 005-500	**[Cause]** An error occurred in the document feeder. **[Remedy]** Switch off the machine power, make sure that the touch screen is blank, and then switch on the machine power. If the error still is not resolved, contact our Customer Support Center.
005-288	**[Cause]** An error occurred in the document feeder. **[Remedy]** Switch off the machine power, make sure that the touch screen is blank, and then switch on the machine power. If the same message is displayed again, contact our Customer Support Center.
010-327 010-328 010-329 010-331 010-332 010-333 010-334 010-335 010-337	**[Cause]** An error occurred in the machine. **[Remedy]** Switch off the machine power, make sure that the touch screen is blank, and then switch on the machine power. If the error still is not resolved, contact our Customer Support Center.
010-379	**[Cause]** An error occurred in the machine. **[Remedy]** Switch off the machine power, make sure that the touch screen is blank, and then switch on the machine power. If the same message is displayed again, contact our Customer Support Center.

Error Code	Cause and Remedy
012-210 012-211 012-212 012-213 012-221 012-223 012-224 012-231 012-243	**[Cause]** Finisher malfunction **[Remedy]** Switch off the machine power, make sure that the touch screen is blank, and then switch on the machine power. If the error still is not resolved, contact our Customer Support Center.
012-249	**[Cause]** Finisher malfunction **[Remedy]** Switch off the machine power, make sure that the touch screen is blank, and then switch on the machine power. If the error still is not resolved, contact our Customer Support Center.
012-259 012-260 012-261 012-263 012-265 012-268 012-269 012-280 012-282 012-283 012-284	**[Cause]** Finisher malfunction **[Remedy]** Switch off the machine power, make sure that the touch screen is blank, and then switch on the machine power. If the error still is not resolved, contact our Customer Support Center.
012-291 012-295 012-296	**[Cause]** The finisher front cover is open. **[Remedy]** Close the finisher front cover. If the error still is not resolved, contact our Customer Support Center.
012-334	**[Cause]** An error occurred. **[Remedy]** Switch off the machine power, make sure that the touch screen is blank, and then switch on the machine power. If the same message is displayed again, contact our Customer Support Center.
012-350	**[Cause]** An error occurred in the finisher. **[Remedy]** Switch off the machine power, make sure that the touch screen is blank, and then switch on the machine power. If the error still is not resolved, contact our Customer Support Center.
013-210 013-211 013-212 013-213 013-220	**[Cause]** An error occurred in the Booklet Unit. **[Remedy]** Switch off the machine power, make sure that the touch screen is blank, and then switch on the machine power. If the error still is not resolved, contact our Customer Support Center.

Error Code	Cause and Remedy
016-210 016-211 016-212 016-213 016-214 016-215 016-216 016-217 016-218 016-219	**[Cause]** An error occurred in the software. **[Remedy]** Switch off the machine power, make sure that the touch screen is blank, and then switch on the machine power. If the error still is not resolved, contact our Customer Support Center.
016-220 016-221 016-222 016-223 016-224 016-225 016-226 016-227 016-228	**[Cause]** An error occurred in the document feeder. **[Remedy]** Switch off the machine power, make sure that the touch screen is blank, and then switch on the machine power. If the error still is not resolved, contact our Customer Support Center.
016-229 016-230	**[Cause]** An error occurred in the software **[Remedy]** Switch off the machine power, make sure that the touch screen is blank, and then switch on the machine power. If the error still is not resolved, contact our Customer Support Center.
016-232	**[Cause]** An error occurred during initialization of the high compression board.Otherwise, the high compression board is not supported on your machine. **[Remedy]** Switch off the machine power, make sure that the touch screen is blank, and then switch on the machine power. If the error still is not resolved, contact our Customer Support Center.
016-233	**[Cause]** An error occurred in the software. **[Remedy]** Switch off the machine power, make sure that the touch screen is blank, and then switch on the machine power. If the error still is not resolved, contact our Customer Support Center.
016-234 016-235 016-236 016-237 016-238 016-239	**[Cause]** An error occurred in the Authentication feature of the machine. **[Remedy]** Switch off the machine power, make sure that the touch screen is blank, and then switch on the machine power. If the error still is not resolved, contact our Customer Support Center.
016-240	**[Cause]** An error occurred in the document feeder. **[Remedy]** Switch off the machine power, make sure that the touch screen is blank, and then switch on the machine power. If the error still is not resolved, contact our Customer Support Center.
016-242	**[Cause]** An error occurred in the machine. **[Remedy]** Switch off the machine power, make sure that the touch screen is blank, and then switch on the machine power. If the error still is not resolved, contact our Customer Support Center.

Error Code	Cause and Remedy
016-310 016-311 016-312 016-313 016-314 016-315 016-316 016-317 016-318 016-319 016-321 016-322 016-323 016-325 016-326 016-327	**[Cause]** An error occurred. **[Remedy]** Switch off the machine power, make sure that the touch screen is blank, and then switch on the machine power. If the same message is displayed again, contact our Customer Support Center.
016-330 016-331 016-332	**[Cause]** An error occurred in the machine. **[Remedy]** Switch off the machine power, make sure that the touch screen is blank, and then switch on the machine power. If the same message is displayed again, contact our Customer Support Center.
016-335 016-336 016-337 016-338 016-339 016-340 016-341 016-342	**[Cause]** An error occurred. **[Remedy]** Switch off the machine power, make sure that the touch screen is blank, and then switch on the machine power. If the same message is displayed again, contact our Customer Support Center.

Error Code	Cause and Remedy
016-345 016-347 016-348 016-350 016-351 016-353 016-354 016-355 016-356 016-357 016-358 016-359 016-360 016-361 016-362 016-363 016-364 016-365 016-366 016-367 016-368 016-369 016-370 016-371	**[Cause]** An error occurred. **[Remedy]** Switch off the machine power, make sure that the touch screen is blank, and then switch on the machine power. If the same message is displayed again, contact our Customer Support Center.
016-346	**[Cause]** An error occurred between the machine and the device connected. **[Remedy]** Switch off the machine power, make sure that the touch screen is blank, and then switch on the machine power. If the same message is displayed again, contact our Customer Support Center.
016-372 016-373 016-374 016-375 016-376 016-377 016-378 016-379 016-380 016-381 016-382	**[Cause]** An error occurred. **[Remedy]** Switch off the machine power, make sure that the touch screen is blank, and then switch on the machine power. If the same message is displayed again, contact our Customer Support Center.
016-400	**[Cause]** The user name or password for 802.1x authentication does not match in the setting of Ethernet1. **[Remedy]** Confirm and correctly enter the user name or password in the setting of Ethernet1. If the error still is not resolved, check whether the network environment is set correctly.

Error Code	Cause and Remedy
016-401	**[Cause]** The 802.1x authentication method cannot be processed in the setting of Ethernet1. **[Remedy]** Set the authentication method of the machine to the same method as set for the authentication server in the setting of Ethernet1.
016-402	**[Cause]** The authentication connection of Ethernet1 timed out. **[Remedy]** Confirm the network connection and switch setting of the authentication device physically connected to the machine via a network, and check whether it is connected to the machine correctly.
016-403	**[Cause]** The root certificate of Ethernet1 did not match. **[Remedy]** Confirm the authentication server and store the root certificate of the server certificate of the authentication server into the machine. If you cannot acquire the root certificate of the server certificate, set [Server Certificate Verification] of [IEEE 802.1x Settings] of Ethernet1 to [Disabled] on the touch screen.
016-404	**[Cause]** An internal error occurred. **[Remedy]** Execute the operation again. If the error still is not resolved, contact our Customer Support Center.
016-405	**[Cause]** An error occurred in the certificate stored in the machine. **[Remedy]** Initialize the certificate. **Reference** • For more information on initializing certificates, refer to "Maintenance" (P.166).
016-406	**[Cause]** An error occurred in the SSL client certificate. **[Remedy]** Take one of the following measures: **1)** Store an SSL client certificate in the machine, and set it as the SSL client certificate. **2)** If an SSL client certificate cannot be set on the machine, select an option other than [EAP-TLS] in [Authentication Method].
016-407 **016-408** **016-409** **016-410** **016-411** **016-412**	**[Cause]** After automatically obtained the IP address, the machine failed to retrieve proxy server settings from the DHCP server. **[Remedy]** Modify the customized program and install it again.
016-421	**[Cause]** A paper tray is removed from the machine. **[Remedy]** Insert the removed paper tray to the machine.
016-427	**[Cause]** The user name or password for 802.1x authentication did not match in the setting of Ethernet2. **[Remedy]** Confirm and correctly enter the user name or password in the setting of Ethernet2. If the error still is not resolved, check whether the network environment is set correctly.

Error Code	Cause and Remedy
016-428	**[Cause]** The 802.1x authentication method cannot be processed in the setting of Ethernet2. **[Remedy]** Set the authentication method of the machine to the same method as set for the authentication server in the setting of Ethernet2.
016-429	**[Cause]** The authentication connection of Ethernet2 timed out. **[Remedy]** Confirm the network connection of Ethernet2 and switch setting of the authentication device physically connected to the machine via a network, and check whether it is connected to the machine correctly.
016-430	**[Cause]** The user name or password for 802.1x authentication did not match in the setting of Ethernet2. **[Remedy]** Confirm and correctly enter the user name or password in the setting of Ethernet2. If the error still is not resolved, check whether the network environment is set correctly.
016-431	**[Cause]** An internal error occurred. **[Remedy]** Execute the operation again. If the error still is not resolved, contact our Customer Support Center.
016-432	**[Cause]** An error occurred in the SSL client certificate of Ethernet2. **[Remedy]** Take one of the following measures: • Store an SSL client certificate in the machine to set the SSL client certificate. • If an SSL client certificate cannot be set on the machine, select an option other than [EAP-TLS] in [Authentication Method].
016-450	**[Cause]** The SMB host name already exists. **[Remedy]** Change the host name. **Reference** • Refer to "Machine's E-mail Address/Host Name" (P.205).
016-453	**[Cause]** Updating of the IPv6 address and host name for the DNS server failed. **[Remedy]** Check whether the IP address of the DNS server is set correctly.
016-454	**[Cause]** Unable to retrieve the IP address from DNS. **[Remedy]** Confirm the DNS configuration and IP address retrieve setting. **Reference** • Refer to "Protocol Settings" (P.200).
016-455	**[Cause]** Connection to the SNTP server timed out. **[Remedy]** Confirm the network cable connection and the IP address of the SNTP server are correct. **Reference** • Refer to "Machine Clock/Timers" (P.146).
016-456	**[Cause]** Received a message from the SNTP server stating that the server is not synchronized with the standard time source. **[Remedy]** Confirm the SNTP server settings. **Reference** • Refer to "Machine Clock/Timers" (P.146).

Error Code	Cause and Remedy
016-461	**[Cause]** When [Assurance Level] under the [Transfer Image Log] is set to [High], you may not be able to create a new job because of a restriction resulting from the congestion of unforwarded image logs. **[Remedy]** Confirm the status of the server managing the image logs and the network status, and eliminate the source obstructing image log forwarding to the image log server. Take one of the following measures: • Confirm the forwarding settings, and then forward all un-forwarded logs. • Change the [Assurance Level] to [Low]. In this case, the image logs may not be forwarded and may be deleted successively. When using the Image Log Kit (PostScript), and you switch the machine power off and then on, or when the machine restarts automatically, switch off the machine power, make sure that the touch screen is blank, and then switch on the machine power.
016-500 016-501 016-502	**[Cause]** An error occurred. **[Remedy]** Switch off the machine power, make sure that the touch screen is blank, and then switch on the machine power. If the same message is displayed again, contact our Customer Support Center.
016-503	**[Cause]** Unable to resolve the SMTP server name when sending. **[Remedy]** Check on CentreWare Internet Services whether the SMTP server settings are correct. Also, confirm whether the DNS server settings are correct.
016-504	**[Cause]** Unable to resolve the POP3 server name when sending. **[Remedy]** Check on CentreWare Internet Services whether the POP3 server settings are correct. Also, confirm whether the DNS server settings are correct.
016-505	**[Cause]** Unable to log into the POP3 server when sending e-mail. **[Remedy]** Check on CentreWare Internet Services whether the user name and password used on the POP3 server are correct.
016-506	**[Cause]** Unable to write the image log because the image log storage space is insufficient on the machine. **[Remedy]** Execute the job again. If the error still is not resolved, take one of the following measures: • Delete unnecessary image logs • Change the [Assurance Level] for image logs to [Low] In this case, the contents of the logs are not secured.
016-507	**[Cause]** When using the Image Log Control feature, failed to forward the image log to the server. **[Remedy]** Either set the forwarding rule for image logs from the server to the machine, or set [Transfer Image Log] to [Disabled].
016-508	**[Cause]** When using the Image Log Control feature, failed to forward the image log to the server. **[Remedy]** Set the forwarding rule for image logs from the server to the machine.

Error Code	Cause and Remedy
016-509	**[Cause]** When using the Image Log Control feature, failed to forward the image log to the server because the forwarding rule for image logs from the server to the machine has not been set. **[Remedy]** Either set the forwarding rule for image logs from the server to the machine, or set [Transfer Image Log] to [Disabled].
016-510	**[Cause]** When using the Image Log Control feature, failed to forward the image log to the server because the forwarding rule for image logs from the server to the machine has not been set. **[Remedy]** Set the forwarding rule for image logs from the server to the machine.
016-511 **016-512**	**[Cause]** When using the Image Log Control feature, failed to forward the image log to the server because the forwarding rule for image logs from the server to the machine has not been set correctly. **[Remedy]** Confirm the forwarding rule for image logs from the server to the machine.
016-513	**[Cause]** An error occurred in connecting to the SMTP server.Probable causes are as follows: **1)** The SMTP server or network may be overloaded. **2)** The source port number for SMTP is incorrect. **[Remedy]** For 1), wait for a while, and then execute the operation again. For 2), confirm whether the source port number for SMTP is correct.
016-514	**[Cause]** An error occurred during processing of an XPS document. **[Remedy]** If an error occurred while printing from a driver which supports XPS, print from the application using another print driver (PCL, etc.). If an error occurred while direct printing an XPS document (such as ContentsBridge Utility, E-mail, and Media Print - Text), print using the print driver (PCL, etc.) from XPS Document Viewer. **Note** • XPS stands for XML Paper Specification.
016-515	**[Cause]** There was insufficient memory during processing of an XPS document. **[Remedy]** Take one of the following measures: • Set [Image Quality] to [Standard] • Increase the amount of memory • Print using the print driver (PCL, etc.) from XPS Document Viewer. **Reference** • XPS stands for XML Paper Specification. **Note** • For more information on [Image Options], refer to the help of the print driver.

Error Code	Cause and Remedy
016-516	**[Cause]** The Print Ticket included in the XPS document includes an invalid description or a print setting not supported by the machine. **[Remedy]** Check whether there is a problem with the method of using the application that sent the print job, or with the content of the print instruction. If your application usage and print instruction are correct, check with the application manufacturer that sent the print job for operations of the application, not with Fuji Xerox. If the error still is not resolved, contact our Customer Support Center. **Note** • XPS stands for XML Paper Specification.
016-517	**[Cause]** There is an error in the content described in the PostScript file. **[Remedy]** Print with the PostScript driver. Furthermore, modify ProcessColorModel described in the PostScript file so that the color mode does not change.
016-518	**[Cause]** With the PostScript driver, booklet and Watermark were specified at the same time. **[Remedy]** With the PostScript driver, specifying a combination of booklet and Watermark/UUID is not possible. Cancel one of them.
016-519	**[Cause]** The number of pages reached the maximum number of pages specified, and the print job is terminated. **[Remedy]** Have your system administrator change the maximum limit of printable pages.
016-520	**[Cause]** An error occurred in the high compression hardware. **[Remedy]** Execute the operation again. Also change the output file format and color mode. If the problem is not resolved, switch off the machine power, make sure that the touch screen is blank, and then switch on the machine power. And then perform the above operation again. If the error still is not resolved, contact our Customer Support Center.
016-521	**[Cause]** The IC Card Reader(optional) is disconnected from the machine while scanning the data with digital signature. **[Remedy]** Switch off the machine power and connect the IC Card Reader, and then switch on the machine power.
016-522	**[Cause]** LDAP server SSL authentication error. Unable to acquire an SSL client certificate. **[Remedy]** The LDAP server is requesting an SSL client certificate. Set an SSL client certificate on the machine.
016-523	**[Cause]** LDAP server SSL authentication error. The server certificate data is incorrect. **[Remedy]** The machine cannot trust the SSL certificate of the LDAP server. Register the root certificate for the LDAP server's SSL certificate to the machine.

Error Code	Cause and Remedy
016-524	**[Cause]** LDAP server SSL authentication error. The server certificate will expire soon. **[Remedy]** Change the SSL certificate of the LDAP server to a valid one. You can clear this error by selecting [Disabled] for [LDAP - SSL/TLS Communication] under [SSL/TLS Settings] on the machine; however, note that selecting this option does not ensure the validity of the LDAP server.
016-525	**[Cause]** LDAP server SSL authentication error. The server certificate has expired. **[Remedy]** Change the SSL certificate of the LDAP server to a valid one. You can clear this error by selecting [Disabled] for [LDAP - SSL/TLS Communication] under [SSL/TLS Settings] on the machine; however, note that selecting this option does not ensure the validity of the LDAP server.
016-526	**[Cause]** LDAP server SSL authentication error. The server name does not match the certificate. **[Remedy]** Set the same LDAP server address to the machine and to the SSL certificate of the LDAP server. You can clear this error by selecting [Disabled] for [LDAP - SSL/TLS Communication] under [SSL/TLS Settings] on the machine; however, note that selecting this option does not ensure the validity of the LDAP server.
016-527	**[Cause]** LDAP server SSL authentication error. This is an SSL authentication internal error. **[Remedy]** An error occurred in the software. Contact our Customer Support Center.
016-528	**[Cause]** You are logged out of the smart card authentication mode while scanning the data with a digital signature. **[Remedy]** Log in to the machine with the smart card, and then execute the operation again.
016-529	**[Cause]** An error occurred when connecting to the Remote Download server. There was no response from the server within the specified time (45 seconds). **[Remedy]** Confirm the network connection. Check whether the Remote Download server is correctly set on the network.
016-533	**[Cause]** Kerberos server authentication protocol error **[Remedy]** The time difference between the machine and the Kerberos server exceeded the clock skew limit value set on the Kerberos server. Check whether the clocks on the machine and Kerberos server are correctly set. Also check whether the summer time and the time zone are correctly set on the machine and Kerberos server.
016-534	**[Cause]** Kerberos server authentication protocol error **[Remedy]** The domain set on the machine does not exist on the Kerberos server, or the Kerberos server address set on the machine is invalid for connection. Check whether the domain name and the server address have been correctly set on the machine. For connection to Windows 2000 or Windows 2003 Server, specify the domain name in uppercase.

Error Code	Cause and Remedy
016-535	**[Cause]** The specified file does not exist on the Remote Download server. **[Remedy]** Confirm the file.
016-536	**[Cause]** An error occurred when accessing the DNS prior to connecting to the Remote Download server. **[Remedy]** Confirm the connection with the DNS. Also check whether the Remote Download server name is registered to the DNS.
016-537	**[Cause]** Could not connect to the Remote Download server. The port of the destination Remote Download server is not open. **[Remedy]** Confirm the port in the network settings.
016-538	**[Cause]** An error occurred when writing the remote download file to the hard disk. The file obtained from the Remote Download server could not be written to the hard disk. **[Remedy]** Confirm the amount of available space, and delete files that are no longer required. Alternatively, replace the hard disk.
016-539	**[Cause]** Kerberos server authentication protocol error **[Remedy]** An error occurred in the software. Contact our Customer Support Center.
016-543	**[Cause]** The specified domain was deleted from ApeosWare Authentication Management(sold separately) and ApeosWare Authentication Agent(sold separately). **[Remedy]** Select [Refresh] on the [Domain] screen, and update the domain information, or add the domain to ApeosWare Authentication Management(sold separately) and ApeosWare Authentication Agent.
016-545	**[Cause]** The specified domain was deleted from ApeosWare Authentication Management or ApeosWare Authentication Agent(sold separately). **[Remedy]** Adjust the times of the computer of the active directory and the computer on which ApeosWare Authentication Management or ApeosWare Authentication Agent is installed. Also, if the Windows Time Service of the computer on which Authentication Agent is installed has stopped, start the service. **Reference** • For more information on the process, refer to the manual for the Authentication Agent.
016-546	**[Cause]** A Local User tried to obtain the information of another user. **[Remedy]** Contact our Customer Support Center.
016-555	**[Cause]** Connection to ApeosWare Authentication Management or ApeosWare Authentication Agent to the database or the active directory timed out. **[Remedy]** Check whether you can connect from ApeosWare Authentication Management or ApeosWare Authentication Agent to the database or the active directory. **Reference** • For more information on the process, refer to the manual for ApeosWare Authentication Management or ApeosWare Authentication Agent.

Error Code	Cause and Remedy
016-556	**[Cause]** Connection to ApeosWare Authentication Management or ApeosWare Authentication Agent to the database timed out because of an overload. **[Remedy]** Because the service is overloaded, wait for a while, and then execute authentication again. If the error still is not resolved, check ApeosWare Authentication Management or ApeosWare Authentication Agent. **Reference** • For more information on the process, refer to the manual for ApeosWare Authentication Management or ApeosWare Authentication Agent.
016-557	**[Cause]** Authentication Agent internal error occurred. **[Remedy]** Check ApeosWare Authentication Management or ApeosWare Authentication Agent. **Reference** • For more information on the process, refer to the manual for ApeosWare Authentication Management or ApeosWare Authentication Agent.
016-558	**[Cause]** The machine received an unknown error from ApeosWare Authentication Management or ApeosWare Authentication Agent. **[Remedy]** Contact our Customer Support Center.
016-559	**[Cause]** A remote download parameter error occurred. An invalid value is set for essential system data. **[Remedy]** Confirm the settings for essential system data.
016-560	**[Cause]** A communications error occurred between the machine and ApeosWare Authentication Management or ApeosWare Authentication Agent (sold separately). **[Remedy]** Check whether the network cable is connected, and confirm the settings of ApeosWare Authentication Management or ApeosWare Authentication Agent. Also, print a Configuration Report, and if the DNS address of the server is set to "Server Name / IP Address" for "Authentication Agent", check whether DNS is enabled.
016-562	**[Cause]** Multiple entries containing the same smart card information were found in the guest database of Active Directory, ApeosWare Authentication Management or ApeosWare Authentication Agent. **[Remedy]** Correct the guest database entries of Active Directory, ApeosWare Authentication Management or ApeosWare Authentication Agent so that they do not contain the same smart card information.
016-564	**[Cause]** Failed to authenticate the Remote Download server. **[Remedy]** Confirm the login name and password to access the Remote Download server. If the error still is not resolved, contact the Customer Support Center.
016-569	**[Cause]** Authentication Agent error **[Remedy]** Contact our Customer Support Center.

Error Code	Cause and Remedy
016-574	**[Cause]** The machine failed to transfer data using FTP of the Scan to PC service because the host or server name of the FTP server could not be resolved when accessing the DNS server. **[Remedy]** Confirm the connection to the DNS server. Check whether the FTP server name is registered correctly on the DNS server.
016-575	**[Cause]** The machine failed to transfer data using FTP of the Scan to PC service because the DNS server address was not registered on the machine. **[Remedy]** Specify the correct DNS server address. Or, specify the destination FTP server by using its IP address.
016-576	**[Cause]** The machine failed to transfer data using FTP of the Scan to PC service because it could not connect to the FTP server. **[Remedy]** Ensure that both the destination FTP server and the machine are available for network communications, by checking the following conditions: • The IP address of the server is set correctly. • The network cables are plugged in securely.
016-577	**[Cause]** Unable to connect to the FTP service of the destination server. **[Remedy]** Take one of the following measures: • Check whether the FTP service of the server is activated. • Check whether the FTP port number of the server is correctly registered on the machine.
016-578	**[Cause]** The machine failed to transfer data using FTP of the Scan to PC service because of unsuccessful login to the FTP server. **[Remedy]** Check whether the login name (user name) and password are correct.
016-579	**[Cause]** The machine failed to transfer data using FTP of the Scan to PC service because the scanned image could not be saved in the FTP server after connection. **[Remedy]** Check whether the FTP server's save location is correct.
016-580	**[Cause]** The machine failed to transfer data using FTP of the Scan to PC service because the file or folder name on the FTP server could not be retrieved after connection. **[Remedy]** Confirm the access privilege for the FTP server.
016-581	**[Cause]** The machine failed to transfer data using FTP of the Scan to PC service because the suffix of the name of the file or folder exceeded the limit value when the machine was connected to the server and the name of a file or folder on the server was determined. **[Remedy]** Change the file name or forwarding destination folder of the scan server. Also try moving or deleting the files within the forwarding destination folder.

Error Code	Cause and Remedy
016-582	**[Cause]** The machine failed to transfer data using FTP of the Scan to PC service because files could not be created on the FTP server after connection. **[Remedy]** Take one of the following measures: • Check whether the specified file name can be used in the save location. • Check whether enough space is available in the save location.
016-583	**[Cause]** Failed to create the lock directory in the FTP server while transferring data using FTP of the Scan to PC service. **[Remedy]** Take one of the following measures: • If the lock directory (*.LCK) exists in the destination, delete it manually, and then execute the operation again. • Check whether the specified name is available in the save location. • Confirm that the specified name is not duplicated in the save location. • Check whether enough space is available in the save location.
016-584	**[Cause]** The machine failed to transfer data using FTP of the Scan to PC service because folders could not created on the FTP server after connection. **[Remedy]** Take one of the following measures: • Check whether the specified folder name can be used in the save location. • Check whether the same folder name exists in the save location. • Check whether enough space is available in the save location.
016-585	**[Cause]** The machine failed to transfer data using FTP of the Scan to PC service because files could not be deleted on the FTP server after connection. **[Remedy]** Confirm the access privilege for the FTP server.
016-586	**[Cause]** The machine failed to delete the lock directory while transferring data using FTP of the Scan to PC service. **[Remedy]** Take one of the following measures: • Confirm the access privilege for the server. • If the lock directory (*.LCK) exists in the destination, delete it manually, and then execute the operation again.
016-587	**[Cause]** The machine failed to transfer data using FTP of the Scan to PC service because folders could not be deleted on the FTP server after connection. **[Remedy]** Confirm the access privilege for the FTP server.
016-588	**[Cause]** The machine failed to transfer data using FTP of the Scan to PC service because the data could not be written on the FTP server after connection. **[Remedy]** Check whether enough space is available in the save location.

Error Code	Cause and Remedy
016-589	**[Cause]** The machine failed to transfer data using FTP of the Scan to PC service because the data could not be read from the FTP server after connection. **[Remedy]** Confirm the access privilege for the FTP server.
016-590	**[Cause]** The machine failed to transfer data using FTP of the Scan to PC service because there are duplicate file names. **[Remedy]** Set [Do Not Save] for the action for file name conflict.
016-591	**[Cause]** The machine failed to perform the additional processing for the file name conflict using FTP of the Scan to PC service. **[Remedy]** If [Add to Existing Folder] is set for the additional processing for file name conflict, confirm that the file format is not multi-page.
016-592	**[Cause]** The machine failed to access the NEXTNAME.DAT file using FTP of the Scan to PC service. **[Remedy]** When [Add to Existing Folder] is set as the process to be executed in case of a file name duplication, check the NEXTNAME.DAT file is correct.
016-593	**[Cause]** The machine failed to transfer data using FTP of the Scan to PC service because an internal error occurred after connection to the FTP server. **[Remedy]** Execute the operation again. If the error still is not resolved, contact our Customer Support Center.
016-594 016-595	**[Cause]** The machine failed to transfer data using FTP of the Scan to PC service because a network error occurred. **[Remedy]** Execute the operation again. If the error still is not resolved, contact our Customer Support Center.
016-596	**[Cause]** The machine failed to transfer data using FTP of the Scan to PC service because a network error occurred. **[Remedy]** Execute the operation again. If the error still is not resolved, contact our Customer Support Center.
016-597	**[Cause]** The machine failed to transfer data using FTP of the Scan to PC service because a network error occurred. **[Remedy]** Stop all accesses from the other devices, and then execute the operation again. If the error still is not resolved, contact our Customer Support Center.
016-598 016-599	**[Cause]** The size of an e-mail page exceeds the maximum message size because of page splitting. **[Remedy]** Take one of the following measures: • Reduce the file size for [Quality/File Size]. • Increase the value for [Maximum Split Count]. **Reference** • For more information on [Quality/File Size], refer to "Scan" > "E-mail Options/Filing Options" > "Quality/File Size (Specifying an Image Compression Ratio When Scanning)" in the User Guide. • For more information on [Maximum Split Count], refer to "E-mail Control" (P.262).

Error Code	Cause and Remedy
016-700	**[Cause]** The job was suspended because the number of the digits for the Secure Print or Charge Print passcode set on the print driver was less than the value specified in [Minimum Passcode Length for Stored Job] on the machine. **[Remedy]** On the print driver, set the passcode string equal to or longer than the value specified in [Minimum Passcode Length for Stored Job].
016-701	**[Cause]** Unable to process print data because of insufficient memory. **[Remedy]** Stop unnecessary ports or delete unnecessary data to increase memory.
016-702	**[Cause]** Unable to process print data because of insufficient print page buffer.
016-703	**[Cause]** The machine received an e-mail specified with an invalid folder number. **[Remedy]** For errors occurring during fax or Internet fax transmission: Contact our Customer Support Center.For errors occurring during e-mail/fax/Internet fax reception:Take one of the following measures:Register the specified folder number, and request the sender to send the e-mail/fax/Internet fax again.Request the sender to send to an available folder.If the error still is not resolved, contact our Customer Support Center.
016-704	**[Cause]** The folder is full, and hard disk capacity is insufficient. **[Remedy]** Delete unnecessary files from the folder, and save the file. **Reference** • Refer to "Send from Folder" > "Checking/Operating Files in a Folder in the User Guide.
016-705	**[Cause]** Probable causes are as follows: **1)** You have specified the machine for the folder registry for the scanned document. However, the Scanner Kit (optional) is not installed. **2)** You have not used the print driver for the machine. **[Remedy]** For 1), press the <Services Home> button, and check whether [Scan to PC] is displayed. If [Scan to PC] is displayed, then check whether the scanned document can be stored in a folder. If unable to store it in the folder, install the Scanner Kit (optional). For 2), use the print driver appropriate for the machine.
016-706	**[Cause]** The hard disk space is insufficient because the number of Secure Print users exceeded the maximum limit. **[Remedy]** Delete unnecessary files from the machine, and delete unnecessary Secure Print users. **Reference** • For more information on deleting users for Secure Print files, refer to "Job Status" > "Printing and Deleting Stored Jobs", and on folders, refer to "Send from Folder" > "Checking/Operating Files in a Folder" in the User Guide.
016-707	**[Cause]** Unable to print with the Sample Set feature because the hard disk is not installed. **[Remedy]** To use the Sample Set feature, the hard disk must be installed. Contact our Customer Support Center.

Error Code	Cause and Remedy
016-708	**[Cause]** Unable to annotate because of insufficient hard disk space. **[Remedy]** Delete unnecessary data from the hard disk to free up disk space.
016-709	**[Cause]** An error occurred during print processing. **[Remedy]** Contact our Customer Support Center.
016-710	**[Cause]** Unable to register the Delayed Print document because of hard disk malfunction. **[Remedy]** Contact our Customer Support Center.
016-711	**[Cause]** The upper limit for the e-mail size has been exceeded. **[Remedy]** Take one of the following measures, and then try sending the mail again. • Reduce the number of pages of the document. • Lower the resolution with [Resolution]. • Reduce the magnification with [Reduce/Enlarge]. • Ask your system administrator to increase the value set for [Maximum Total Data Size].
016-712	**[Cause]** Unable to process the document because the specified scan area is too small. **[Remedy]** Increase the resolution or scan area.
016-713	**[Cause]** The passcode entered does not match the passcode set on the folder. **[Remedy]** Enter the correct passcode.
016-714	**[Cause]** The specified folder does not exist. **[Remedy]** Create a new folder or specify an existing folder.
016-715	**[Cause]** The machine failed to access the ESCP form because the password of the ESCP form does not match. **[Remedy]** Enter the correct password of the ESCP form.
016-716	**[Cause]** Unable to spool TIFF file because of insufficient hard disk space. **[Remedy]** Delete unnecessary files and users from the machine. **Reference** • Refer to "Job Status" > "Printing and Deleting Stored Jobs" in the User Guide.
016-717	**[Cause]** Unable to create a Transmission Report - Job Undelivered or a Transmission Report because the transmission result information required for creating the report is not stored in the machine's memory. **[Remedy]** Take one of the following measures: • Execute the jobs for large size Internet fax documents (about 2GB) by splitting each document to minimize memory or HDD usage. • If many scan or Internet fax documents are being processed, wait until the jobs are completed to execute a new job. • After completing the job that you want to confirm in a report, do not execute 200 or more jobs before printing the report.

Error Code	Cause and Remedy
016-718	**[Cause]** Unable to process the PCL print data because of insufficient memory. **[Remedy]** Reduce the resolution, or cancel 2 sided printing or N up feature, and then print again.
016-719	**[Cause]** Unable to process the PCL print data because of insufficient print page buffer. **[Remedy]** Increase the size of the print page buffer.
016-720	**[Cause]** An invalid command is included in PCL print data. **[Remedy]** Confirm the print data and try printing again.
016-722	**[Cause]** The specified staple position is not supported by the machine, or the paper size specified is not supported by the finisher. **[Remedy]** Confirm the staple position and the paper size, and try printing again.
016-723	**[Cause]** The specified punch position is not supported by the machine, or the paper size specified is not supported by the finisher. **[Remedy]** Confirm the punch position and the paper size, and try printing again.
016-724	**[Cause]** The specified staple and punch position combination is unsupported. **[Remedy]** Specify the staple and punch positions on the same side, and try printing again.
016-725	**[Cause]** A scanned document stored in a folder was to be sent by fax using the Job Flow feature, but the file in the folder could not be converted to fax data. **[Remedy]** Do not use the Job Flow feature. Simply scan the document from the machine's [Fax] screen to send it by fax.
016-726	**[Cause]** Unable to automatically select a printer language because PostScript data was sent with no Adobe PostScript 3 Kit (optional) installed. **[Remedy]** The Adobe PostScript 3 Kit (optional) must be installed.
016-727	**[Cause]** A print job was cancelled without storing a file into a folder because the file was determined as not containing any pages. **[Remedy]** The file could not be stored into the folder because the machine determined the print file as not containing any pages. Disable [Skip Blank Pages] on the [Advanced] tab on the print driver, or add text to the file if the file is blank.
016-728	**[Cause]** An unsupported tag is included in the TIFF file. **[Remedy]** Confirm the print data.
016-729	**[Cause]** Unable to print because the number of colors or the resolution of the TIFF file exceeds the allowed range. **[Remedy]** Change the number of colors or resolution for the TIFF file, and execute the operation again.
016-731	**[Cause]** Unable to print TIFF data because it was interrupted. **[Remedy]** Retry printing.

Error Code	Cause and Remedy
016-732	**[Cause]** The form specified by emulation has not been registered at the host side. **[Remedy]** Resend the form data.
016-733	**[Cause]** Probable causes are as follows: **1)** Unable to obtain the IP address (the string after "@" in the destination e-mail address) when e-mail is sent. **2)** DNS server was unable to resolve the Internet address (the string after "@") by the DNS server when e-mail is sent. **[Remedy]** For 1), confirm the e-mail address. For 2), confirm the DNS server address.
016-735	**[Cause]** Attempted to print [Job Template List] while updating the job template. **[Remedy]** Retry printing after waiting for a while.
016-738	**[Remedy]** Specify a paper size supported for booklet creation, and try printing again.
016-739	**[Remedy]** Specify a combination of document size and paper size supported for booklet creation, and try printing again.
016-740	**[Remedy]** Specify a paper tray supported for booklet creation, and try printing again.
016-741 016-742 016-743 016-744 016-745	**[Cause]** An error occurred during the update process of the machine. **[Remedy]** Switch off the machine power, make sure that the touch screen is blank, and then switch on the machine power. If the error still is not resolved, contact our Customer Support Center.
016-746	**[Cause]** An unsupported feature is included in the received PDF. **[Remedy]** Print using a print driver.
016-747	**[Cause]** The memory became insufficient when using the Repeat Image feature and the Annotations features simultaneously. **[Remedy]** Take one of the following measures: • Increase the annotation image size. • Reduce the usage of Repeat Image.
016-748	**[Cause]** Unable to print because of insufficient hard disk space. **[Remedy]** Reduce the number of print pages by dividing the print data or by printing one copy at a time when printing multiple copies.
016-749	**[Cause]** Probable causes are as follows: For a print job: 1) The printer language received from the print driver is unsupported by this machine. For printing of a document received by Internet Fax: 2) The printer language of the document received from the remote machine is unsupported by this machine. **[Remedy]** For 1), use the machine's print driver for printing. If the error still is not resolved, contact our Customer Support Center. For 2), request the sender to send Internet fax documents using a printer language supported by the machine.

Error Code	Cause and Remedy
016-750	**[Cause]** The machine received a printing job ticket with a PDF, an XPS from an application (such as ContentsBridge) that allows direct transmissions of files, but the printing job ticket data had a grammar or print instruction unsupported by the machine. **[Remedy]** Check whether you are correctly using the application (such as ContentsBridge) and whether the print instruction was correct. If your application usage and print instruction are correct, check with the application manufacturer that sent the print job for operations of the application. If the error still is not resolved, have the Configuration Report, the Job History Report, and the print data with the printing job ticket ready, and contact our Customer Support Center. **Note** • XPS stands for XML Paper Specification.
016-752	**[Cause]** Unable to process for PDF Bridge because of insufficient memory space.
016-753	**[Cause]** The password entered does not match that of the PDF file. **[Remedy]** Set the correct password on ContentsBridge.
016-755	**[Cause]** Attempted to process a print-protected PDF file. **[Remedy]** Cancel the print protection using Adobe® Reader®, and try printing again.
016-756	**[Cause]** Do not have permission to use the service. **[Remedy]** Consult your system administrator.
016-757	**[Cause]** The passcode is incorrect. **[Remedy]** Enter the correct passcode.
016-758	**[Cause]** The division does not have permission to use the service. **[Remedy]** Consult your system administrator.
016-759	**[Cause]** The number of pages reached the maximum number of pages for this service. **[Remedy]** Consult your system administrator.
016-760	**[Remedy]** Take one of the following measures: • Set [Image Quality] to [High Speed]. • Increase PostScript memory.
016-761	**[Cause]** An error occurred during image processing.
016-762	**[Cause]** The specified printer language is not installed on the machine.
016-763	**[Cause]** Unable to connect to the POP server. **[Remedy]** Confirm the POP server IP address set on the machine.
016-764	**[Cause]** Unable to connect to the SMTP server. **[Remedy]** Consult the SMTP server administrator.
016-765	**[Cause]** Unable to send the e-mail because the hard disk on the SMTP server is full. **[Remedy]** Consult the SMTP server administrator.
016-766	**[Cause]** An error occurred on the SMTP server. **[Remedy]** Consult the SMTP server administrator.

Error Code	Cause and Remedy
016-767	**[Cause]** Unable to send the e-mail because the address is not correct. **[Remedy]** Confirm the address, and try sending again.
016-768	**[Cause]** Unable to connect to the SMTP server because the machine's mail address is incorrect. **[Remedy]** Confirm the machine's mail address.
016-769	**[Cause]** The SMTP server does not support delivery receipts (DSN). **[Remedy]** Send e-mail without setting delivery receipts (DSN).
016-770	**[Cause]** Direct Fax is restricted. **[Remedy]** Consult your system administrator whether Direct Fax is available. If it is available, contact our Customer Support Center.
016-772	**[Cause]** The DNS server address is not set. **[Remedy]** Set the DNS server address.
016-774	**[Cause]** Unable to process compression conversion because of insufficient hard disk space. **[Remedy]** Delete unnecessary data from the hard disk to free up disk space.
016-775	**[Cause]** Unable to process image conversion because of insufficient hard disk space. **[Remedy]** Delete unnecessary data from the hard disk to free up disk space.
016-776	**[Cause]** An error occurred during image conversion processing. **[Remedy]** For errors occurring when forwarding with Store to Folder or Internet Fax: The image conversion processing for the part of the data may be completed. Retrieve each converted page from the folder using CentreWare Internet Services. For more information, refer to "Configuring Machine Settings Using CentreWare Internet Services" (P.331). For errors occurring after instructing encryption or signature using a certificate: Take one of the following measures: • Check whether the certificate is valid. • Set the correct date and time on the machine. For errors occurring when [Microsoft® Word] or [Microsoft® Excel®] is selected for [File Format]: There are too many images in the document. Select [Single File for Each Page] for [File Format], or select [Picture Object] for [Image Area Format].
016-777	**[Cause]** A hard disk error occurred during image processing. **[Remedy]** The hard disk may be defective. To replace the hard disk, contact our Customer Support Center.
016-778	**[Cause]** The conversion processing of the scanned image was interrupted because of insufficient disk space. **[Remedy]** Delete unnecessary data from the hard disk to free up disk space.

Error Code	Cause and Remedy
016-779	**[Cause]** An error occurred during scanned image conversion processing. **[Remedy]** Retry scanning. If using large-size paper such as A3 with [Resolution] set to [600 dpi], specify [Resolution] to [400 dpi] or lower in [Layout Adjustment]. If the error still is not resolved, contact our Customer Support Center.
016-780	**[Cause]** A hard disk error occurred during scanned image conversion processing. **[Remedy]** The hard disk may be defective. To replace the hard disk, contact our Customer Support Center.
016-781	**[Cause]** Probable causes are as follows: **1)** The mail server cannot be found during e-mail sending (TCP/IP session establishment failed). **2)** The machine received an SMTP server error from the mail server during e-mail sending. **[Remedy] 1)** Take one of the following measures: • Check whether the network cables are plugged in securely. • Check whether the IP address of the SMTP server when an IP address is used for server specification. **2)** Enter the host name using ASCII characters. Available ASCII characters are follows: • alphabets • numerals Check whether or not ASCII characters are used in [Tools] > [Connectivity & Network Setup] > [Machine's E-mail Address/Host Name].
016-786	**[Cause]** When using the Scan feature, the machine could not write the file to the hard disk. **[Remedy]** Take one of the following measures: • Switch off the machine power, make sure that the touch screen is blank, and then switch on the machine power. • Load paper on the paper tray as necessary. • If the error occurs when sending an e-mail, take one of the following measures: • Lower the resolution. • Reduce the size. • Reduce the number of pages, and divide the job into several e-mails to send. • Send the job by setting [Color Scanning] to [Black & White].
016-788	**[Cause]** Failed to retrieve a file from the Web browser. **[Remedy]** Take one of the following measures, and then execute the operation again: • Reload the browser page. • Restart the browser. • Switch off the machine power, make sure that the touch screen is blank, and then switch on the machine power.

Error Code	Cause and Remedy
016-790	**[Cause]** Unable to send an e-mail with Split Send because of exceeding the maximum number of splits allowed. **[Remedy]** Take one of the following measures: • Reduce the file size for [Quality/File Size]. • Increase the value for [Maximum Split Count]. **Reference** • For more information on [Quality/File Size], refer to "Scan" > "E-mail Options/Filing Options" > "Quality/File Size (Specifying an Image Compression Ratio When Scanning)" in the User Guide. • For more information on [Maximum Split Count], refer to "E-mail Control" (P.262).
016-792	**[Cause]** Failed to acquire the specified job history when printing a Job Report. **[Remedy]** The specified job history does not exist.
016-794	**[Cause]** Media is not inserted correctly. **[Remedy]** Check whether the media is inserted correctly.
016-795 **016-796** **016-797**	**[Cause]** An error occurred when reading the data on the media. **[Remedy]** On a computer, confirm the content recorded on the media.
016-798	**[Cause]** Unable to print a document because the hard disk is not installed. **[Remedy]** Install the hard disk, and try printing again. Contact our Customer Support Center.
016-799	**[Cause]** An invalid print parameter is included in the print data of the application, or the print data and the Print Setup settings may not match. **[Remedy]** Check the print data of the application and the Print Setup settings, and try printing again.
017-700	**[Cause]** ThinPrint.Engine connection timed out. **[Remedy]** Confirm the connection to the ThinPrint.Engine.
017-701	**[Cause]** An error occurred while connecting to ThinPrint.Engine. **[Remedy]** Confirm the connection to the ThinPrint.Engine.
017-702	**[Cause]** The data sent to ThinPrint.Engine is invalid. **[Remedy]** Confirm the connection to the ThinPrint.Engine.
017-703	**[Cause]** The print data sent from ThinPrint.Engine exceeded the maximum size of the machine. **[Remedy]** Split the job, and try printing again.
017-704	**[Cause]** An internal error occurred. **[Remedy]** Switch off the machine power, make sure that the touch screen is blank, and then switch on the machine power. Send the job again.
017-705 **017-706** **017-707** **017-708**	**[Cause]** ThinPrint.Engine SSL authentication error. **[Remedy]** Check the server certificate information (expiry date and address) that is registered to ThinPrint.Engine.

Error Code	Cause and Remedy
017-709	**[Cause]** An SSL communication error occurred between ThinPrint Engine and the machine. **[Remedy]** Check the settings of the machine.
017-713	**[Cause]** The SMTP server does not support STARTTLS. **[Remedy]** Change SSL/TLS communication setting to other than [STARTTLS].
017-714	**[Cause]** SSL connection to the SMTP server failed. **[Remedy]** Confirm whether the SMTP server supports SSL connection. If the server supports it, check the port number of the SMTP server. If the error still is not resolved, contact our Customer Support Center.
017-715	**[Cause]** SMTP server SSL server authentication error. The server certificate is invalid. **[Remedy]** Use the valid SSL server certificate of the SMTP server. You can avoid this error by setting [SMTP-SSL/TLS Communication] in [SSL/TLS Settings] to [Disabled], however the validity of the server cannot be warranted.
017-716	**[Cause]** SMTP server SSL server authentication error. It is before the valid period of the server certificate. **[Remedy]** Use the valid SSL server certificate of the SMTP server. You can avoid this error by setting [SMTP-SSL/TLS Communication] in [SSL/TLS Settings] to [Disabled], however the validity of the server cannot be warranted.
017-717	**[Cause]** SMTP server SSL server authentication error. The server certificate expired. **[Remedy]** Use the valid SSL server certificate of the SMTP server. You can avoid this error by setting [SMTP-SSL/TLS Communication] under [SSL/TLS Settings] to [Disabled], however the validity of the server cannot be warranted.
017-718	**[Cause]** SMTP server SSL server authentication error. The server name and certificate do not match. **[Remedy]** Use the valid SSL server certificate of the SMTP server. You can avoid this error by setting [SMTP-SSL/TLS Communication] in [SSL/TLS Settings] to [Disabled], however the validity of the server cannot be warranted.
017-719	**[Cause]** SMTP server SSL server authentication error. SSL authentication internal error. **[Remedy]** Execute the operation again. If the error still is not resolved, contact our Customer Support Center.
017-723	**[Cause]** Character strings the DocuWorks Direct Print feature does not support are used. **[Remedy]** Print the file from DocuWorks Viewer via the PCL print driver.
017-724	**[Cause]** An error occurred while receiving a print job from Denshi- Pen. **[Remedy]** Confirm whether the machine is compatible with Denshi- Pen. When it is compatible, execute the operation again. If the error still is not resolved, contact our Customer Support Center.

Error Code	Cause and Remedy
017-725	**[Cause]** An error occurred while receiving a print job when the Force Annotation is enabled. **[Remedy]** Incorrect name is set for the template of the Force Annotation. Confirm the name of the template registered in the machine.
017-729	**[Cause]** When the machine is used as a print job storage device, print job sending was stopped temporarily because the number of jobs in the machine exceeded the maximum receivable volume or the space for spool data was insufficient. **[Remedy]** Take one of the following measures: • Set to spool data to the hard disk from the setting of the storage destination machine. • Set [IPP] under [Properties] > [General Setup] > [Memory Settings] to [Spool to Hard Disk] by CentreWare Internet Services. • Wait for a while and send the job again.
017-730	**[Cause]** When the machine is used as a print job storage device, the computer failed to send a job to the machine because a network error occurred. **[Remedy]** Confirm the followings: • The network cable is connected properly. • The storage destination machine is powered on. • The IPP port of the storage destination machine is enabled. If the error still is not resolved, contact our Customer Support Center.
017-731	**[Cause]** Unable to connect to the POP server. **[Remedy]** Confirm the followings: • The IP address of the POP server is set on the machine. • The network cable is connected properly.
017-732	**[Cause]** When the machine is used as a print job storage device, the computer failed to send a job because the machine is off-line. **[Remedy]** Press the <Machine Status> button of the storage destination machine, and set [Print Mode] to [On-line] on the [Machine Information] screen . If the error still is not resolved, contact our Customer Support Center.
017-733	**[Cause]** When the machine is used as a print job storage device, an internal error in the software is occurred while the job sending to the machine. **[Remedy]** Execute the operation again. If the error still is not resolved, contact our Customer Support Center.
017-734	**[Cause]** An internal error occurred during processing the AirPrint/Mopria data. **[Remedy]** Send the print job again by using the printer driver or software other than AirPrint/Mopria. If the error still is not resolved, contact our Customer Support Center.
017-735	**[Cause]** Device usage is prohibited. **[Remedy]** Execute the operation again. If the error still is not resolved, contact our Customer Support Center.

Error Code	Cause and Remedy
017-737	**[Cause]** Data could not be sent due to memory capacity shortage. **[Remedy]** Have your system administrator stop or delete the unnecesary plug-ins. If the error still is not resolved, switch off the machine power, make sure that the touch screen is blank, and then switch on the machine power. If the same message is displayed again, contact our Customer Support Center.
017-738 017-739	**[Cause]** Data could not be sent due to an internal error. **[Remedy]** Switch off the machine power, make sure that the touch screen is blank, and then switch on the machine power. If the same message is displayed again, contact our Customer Support Center.
017-740	**[Cause]** Data could not be sent due to a plug-in acticvation failure. **[Remedy]** Switch off the machine power, make sure that the touch screen is blank, and then switch on the machine power. If the same message is displayed again, contact our Customer Support Center.
017-741	**[Cause]** The job flow cannot be activated. **[Remedy]** Take one of the following measures: • Install the latest plug-in. • Confirm the jobflow settings.
017-742	**[Cause]** An error occurred while connecting to the forwarding server. **[Remedy]** Check the network connection and the address of the forwarding server.
017-743	**[Cause]** Cannot login to the forwarding server. **[Remedy]** Confirm the user ID and the passwork.
017-744	**[Cause]** An error occurred while connecting to the forwarding server. **[Remedy]** Confirm the followings: You can access to the same path using a computer. There is enough memory capacity left in the storage destination.
017-745	**[Cause]** Data could not be sent due to the lack of hard disk memory capacity. **[Remedy]** Take one of the following measures: • Send with lower resolution. • Send in smaller size. • Send with fewer pages by deviding the job. • Send with [Black & White] set as the [Output Color].
017-746	**[Cause]** A hard disk error occurred. **[Remedy]** Switch off the machine power, make sure that the touch screen is blank, and then switch on the machine power. If the same message is displayed again, contact our Customer Support Center.
017-747	**[Cause]** Connection to ApeosWare Authentication Agent to the database timed out because of an overload. **[Remedy]** Wait for a while, and then execute the operation again. If the same message is displayed again, contact our Customer Support Center.

Error Code	Cause and Remedy
017-748	**[Cause]** Data could not be sent due to the incorrect machine setting. **[Remedy]** Confirm the network setting of the machine.
017-749	**[Cause]** An error occurred. **[Remedy]** Confirm the job flow settings.
017-750	**[Cause]** A plug-in error occurred. **[Remedy]** Switch off the machine power, make sure that the touch screen is blank, and then switch on the machine power. If the same message is displayed again, reinstall the plug-in.
017-751	**[Cause]** A plug-in error occurred. **[Remedy]** Confirm the detail from [Transmission Report - Job Undelivered].
017-755	**[Cause]** Cannot download a software. **[Remedy]** Take one of the following measures: • Confirm that [Enabled] is checked in CentreWare Internet Services under [Properties] > [Services] > [Machine Software]> [Upgrades]. • Download the software through USB connection.
017-759	**[Cause]** An error occurred during firmware update in the machine. **[Remedy]** Contact our Customer Support Center.
017-760	**[Cause]** An error occurred in connecting to the POP3 server. Probable causes are follows. **1)** When connecting to the POP3 server by the TLS communication, the port number is incorrect. **2)** When connecting to the POP3 server by the SSL communication, an internal error occurred. **[Remedy]** For 1), set the correct port number for the POP3 server. For 2), switch off the machine power, make sure that the touchscreen is blank, and then switch on the machine power. If the error still is not resolved, contact our Customer Support Center.
017-761	**[Cause]** A SSL server authentication error occurred because the server certificate for the POP3 server is invalid. **[Remedy]** Use the valid server certificate for the POP3 server.
017-762	**[Cause]** The server certificate for the POP3 server is before the valid period. **[Remedy]** Be sure to match the time set on the POP3 server and the machine. If the time matches, use the valid server certificate.
017-763	**[Cause]** The server certificate for the POP3 server is expired. **[Remedy]** Be sure to match the time set on the POP3 server and the machine. If the time matches, use the valid server certificate.
017-764	**[Cause]** The server addresses of the POP3 server and the server certificate are not same. **[Remedy]** Use the valid server certificate in which the correct server address is written.

Error Code	Cause and Remedy
017-765	**[Cause]** An error occurred in connecting to the POP3 server. **[Remedy]** Execute the operation again. If the error still is not resolved, contact our Customer Support Center.
017-766	**[Cause]** An error occurred in connecting to the POP3 server. Probable causes are follows. **1)** When connecting to the POP3 server by the TLS communication, the port number is incorrect. **2)** When connecting to the POP3 server by the SSL communication, an internal error occurred. **[Remedy]** For 1), set the correct port number for the POP3 server. For 2), switch off the machine power, make sure that the touchscreen is blank, and then switch on the machine power. If the error still is not resolved, contact our Customer Support Center.
017-767	**[Cause]** A SSL server authentication error occurred because the server certificate for the POP3 server is invalid. **[Remedy]** Use the valid server certificate for the POP3 server.
017-768	**[Cause]** The server certificate for the POP3 server is before the valid period. **[Remedy]** Be sure to match the time set on the POP3 server and the machine. If the time matches, use the valid server certificate.
017-769	**[Cause]** The server addresses of the POP3 server and the server certificate are not same. **[Remedy]** Use the valid server certificate in which the correct server address is written.
017-770	**[Cause]** An error occurred in connecting to the POP3 server. **[Remedy]** Execute the operation again. If the error still is not resolved, contact our Customer Support Center.
017-771	**[Cause]** An error occurred. **[Remedy]** Execute the operation again. If the error still is not resolved, contact our Customer Support Center.
017-772	**[Cause]** The scanned documents is completely blank. **[Remedy]** Take one of the following measures. • Check whether the document is blank or whether the side of the document to be scanned is loaded correctly. • Select [Image option] in the [Advanced Settings] screen and set the scan density to be [Darken]. If the error still is not resolved, contact our Customer Support Center.
017-780	**[Cause]** When [Enabled] is set to [Auto Job Promotion], a bypassed job is automatically deleted after a certain period of time. **[Remedy]** No measure is required. **Note** • If necessary, change the setting by set [Disabled] or specify the period of time until a bypassed job is deleted between 1 minute and 120 hours.

Error Code	Cause and Remedy
017-782	**[Cause]** An internal error occurred during image processing. No measure is required. **[Remedy]** Execute the operation again. If the error still is not resolved, contact our Customer Support Center.
017-783	**[Cause]** The memory became insufficient during image processing. **[Remedy]** Take one of the following measures: **Note** • Transmit data with lower resolution. • Transmit data in the setting [Output Color] to [Black & White].
017-784 017-785 017-786	**[Cause]** An internal error occurred during image processing. **[Remedy]** Execute the operation again. If the error still is not resolved, contact our Customer Support Center.
017-787	**[Cause]** An error occurred while processing data from Google Cloud Print. **[Remedy]** Print by a method other than Google Cloud Print.
018-400	**[Cause]** Although IPsec is enabled, theIPsec settings are inconsistent. • Although [Authenticated by Preshared Key] is set in [IKE Authentication Method], a passcode is not set. • Although [Authenticated by Digital Signature] is set in [IKE Authentication Method], an IPsec certificate is not set. **[Remedy]** Remove the inconsistency of the IPsec settings, and enable IPsec again. • When [Authenticated by Preshared Key] is set in [IKE Authentication Method], set the passcode. • When [Authenticated by Digital Signature] is set in [IKE Authentication Method], set an IPsec certificate.
018-405	**[Cause]** An error occurred during LDAP authentication. **[Remedy]** The account is disabled in the active directory of the authentication server, or the access is set to disabled. Consult your network administrator.
018-406 018-407	**[Cause]** The machine detects the identical IPv4 addresses when Ethernet1 and Ethernet2 are connected to different network and the setting of identical addresses is prohibited. **[Remedy]** Set different IP addresses to each Ethernet. When setting the same IP address to each Ethernet, contact our Customer Support Center.
018-408	**[Cause]** The IPv4 address already exists in the network of Ethernet2. **[Remedy]** Change the IPv4 address of Ethernet2.
018-409	**[Cause]** The IPv6 address already exists in the network of Ethernet2. **[Remedy]** Change the IPv6 address of the network in which the address already exists.
018-410	**[Cause]** Updating of the IPv4 address and host name for the DNS server failed on the network of Ethernet2. **[Remedy]** Check whether the IP address of the DNS server is set correctly.
018-411	**[Cause]** Updating of the IPv6 address and host name for the DNS server failed on the network of Ethernet2. **[Remedy]** Check whether the IP address of the DNS server is set correctly.

Error Code	Cause and Remedy
018-412 018-413	**[Cause]** The IPv6 address already exists in the network of Ethernet2. **[Remedy]** Change the IPv6 address of the network in which the address already exists.
018-414	**[Cause]** IP address for IPv6 set manually in Ethernet2 is incorrect. **[Remedy]** Set the IP address correctly.
018-415	**[Cause]** IP address for IPv6 set manually in Ethernet2 is incorrect. **[Remedy]** Change the [Manually Configured IPv6 Address] on the machine, or the IP address of IPv6 on the network device, to remove the duplication of addresses.
018-416	**[Cause]** The IPv6 address already exists in the network of Ethernet2. **[Remedy]** Change the IPv6 address of the network in which the address already exists.
018-500	**[Cause]** The certificate does not exist in the authentication server. **[Remedy]** Configure the server certificate. Or, cancel authentication.
018-501	**[Cause]** Communications with the CA server set in the machine failed. **[Remedy]** Check the network connection and the address of the CA server.
018-502	**[Cause]** The machine failed to transfer data using SMB of the Scan to PC service because computers allowed to login are restricted. **[Remedy]** Confirm the property information for the specified user, and check whether the computers allowed to login to the server are restricted.
018-503 018-504	**[Cause]** Communications with the CA server set in the machine failed. **[Remedy]** Execute the authentication operation again.

Error Code	Cause and Remedy
018-505	**[Cause]** Failed to log into the destination computer while transferring data using SMB of the Scan to PC service. **[Remedy]** Check whether the user name and password of the SMTP server registered in the machine is correct. **Important** • The password cannot be confirmed. If you have forgotten the password, reset the password. Consult your system administrator for the pssword reset procesure. - When using Windows Server 2003, be sure to match the time set on the SMB server and the machine. - When the destination computer is Macintosh, you need to change the account settings of the shared folder so that file sharing with Windows users becomes available. For information about necessary accounting settings, consult your system administrator. The following is an example of a procedure for Mac OS X 10.6. **Note** • It is recommended that users create a dedicated account for data transfer. You can create and set the account on the dialog box that appears by choosing Apple menu > [System Preferences] and then clicking [Accounts] icon. **1)** From Apple menu, choose [System Preferences], and then click [Sharing]. **2)** Make sure that [File Sharing] check box is selected, and then click [Options]. **3)** Select [Share files and folders using SMB]. **4)** Check the user accounts to enable for file sharing. Enter the user's password, then click [OK]. **5)** Click [Done]. **Note** • For information on how to change the account settings on other version of Mac OS, consult your system administrator or the official website of Apple Inc.
018-506	**[Cause]** Communications with the CA server set in the machine failed. **[Remedy]** Execute the authentication operation again.
018-507	**[Cause]** The authentication failed because the user name or password entered is not correct. **[Remedy]** Enter the correct user name or password.
018-508	**[Cause]** A server error occurred during authentication. **[Remedy]** Check the status of the authentication server.

Error Code	Cause and Remedy
018-543	**[Cause]** Probable causes are as follows: **1)** The machine failed to transfer data using SMB of the Scan to PC service because the specified shared name does not exist. **2)** The machine failed to transfer data using SMB of the Scan to PC service because Invalid characters are used in the specified shared name. **3)** The machine failed to transfer data using SMB of the Scan to PC service because access privilege does not set on the specified shared name when the server is Macintosh. **[Remedy] 1)** Confirm that the specified shared name exits in the destination PC. **2)** Take one of the following measures: • Check whether the following invalid characters are included in the shared name set in the machine " / : | < > ; , * ? \ [ ] + = • Check whether a space character is included at the top or end of the shared name set in the machine. • Check whether the shared name set in the machine is specified only by a period. **3)** When the destination computer is Macintosh, you need to change the access privileges for the user for shared folder. For information about necessary accounting settings, consult your system administrator. The following is an example of a procedure for Mac OS X 10.6. **Note** • It is recommended to create a dedicated account for data transfer. You can create and set the account on the dialog box that appears by choosing Apple menu > [System Preferences] and then clicking [Accounts] icon. **1)** From Apple menu, choose [System Preferences], and then click [Sharing]. **2)** Make sure that [File Sharing] check box is selected. **3)** Select the folder being shared from folders listed in the [Shared Folders] filed. **4)** Choose [Read & Write] as privilege option for the user listed in the [Users] field. **Note** • For information on how to change the access privilege settings on other version of Mac OS, consult your system administrator or the official website of Apple Inc.
018-547	**[Cause]** The machine failed to transfer data using SMB of the Scan to PC service because the number of users logging into the SMB server exceeded the limit when logging in to the SMB server. **[Remedy]** Take one of the following measures: • Confirm how many users can access the shared folder. • Check whether the number of login users have exceeded the limit.

Error Code	Cause and Remedy
018-556	**[Cause]** Received the "XRXERROR" error detection code from the HTTP server. **[Cause]** **1)** Check whether the specified drive and directory is available on the destination HTTP server for the scanned document. **2)** Perform the same operation again. If the problem persists, contact our Customer Support Center.
018-557	**[Cause]** The specified file name contains invalid characters. **[Remedy]** Modify the file name. Make sure that invalid characters are not contained in the destination file name for the scanned document.
018-558	**[Cause]** Received an error code from HTTP server. **[Remedy]** **1)** Check whether the specified directory exists on the destination HTTP server for the scanned document. **2)** Check whether the specified file exists on the HTTP server.
018-559	**[Cause]** The same file name already exists. [Do Not Save] is selected when duplicate file name exists. **[Remedy]** Select any option other than [Do Not Save] in [File Name Conflict].
018-560	**[Cause]** A user authentication error occurred. (Received HTTP Status 401). **[Remedy]** Check the followings: • The destination HTTP server for the scanned document is accessible by PC. • Login name • Login password • The HTTP server name • The HTTP server path name
018-561	**[Cause]** The hostname or the script storage location is not correct. (Received HTTP Status 404). **[Remedy]** Check the followings: • The destination HTTP server for the scanned document is accessible by PC. • The HTTP server name • The HTTP server path name
018-562	**[Cause]** A client-side error occurred. (Received HTTP Status 4xx other than 401 and 404). **[Remedy]** Check the followings: • The destination HTTP server for the scanned document is accessible by PC. • The server settings
018-563	**[Cause]** A server-side error occurred. (Received HTTP Status 5xx). **[Remedy]** Check the followings: • The destination HTTP server for the scanned document is accessible by PC. • The server settings

Error Code	Cause and Remedy
018-564	**[Cause]** DNS resolution for the specified hostname failed. **[Remedy]** Check the followings: • The destination HTTP server for the scanned document is registered on the DNS server. • The machine is connected to the DNS server. • The address of the DNS server is set on the machine.
018-565	**[Cause]** DNS resolution for the proxy server name set on the machine failed. **[Remedy]** Check the followings: • The proxy server name set on the machine is registered on the DNS server. • The machine is connected to the DNS server. • The address of the DNS server is set on the machine.
018-566	**[Cause]** Unable to connect to the HTTP server. **[Remedy]** Check the followings: • The network cable connection on the machine • The destination HTTP server for the scanned document is accessible by PC.
018-567	**[Cause]** The followings may be the cause: • The communication is disconnected while reading or writing due to some reason. • Close process of the file failed due to some reason. **[Remedy]** Check whether the destination HTTP server for the scanned document is accessible by PC.
018-568	**[Cause]** An SSL/TLS connection error occurred. **[Remedy]** Check the followings: • The destination HTTP server for the scanned document is accessible by PC. • SSL settings for the HTTP server is correct. • The HTTP server name • The HTTP server path name
018-569	**[Cause]** The SSL server certificate may have a problem. **[Remedy]** **1)** Check whether the destination HTTP server for the scanned document is accessible by PC. **2)** Check whether the SSL server certificate is registered on the HTTP server. **3)** Check whether the SSL server certificate is valid. Check the followings: • the certificate is unexpired • the time set on the machine is correct • the certificate is not on the discard list **4)** Check the certificate path to the SSL server certificate, and import the required CA certificate. **5)** If the SSL server certificated is not registered on the HTTP server, disable the [Verify Remote Server Certificate] setting.

Error Code	Cause and Remedy
018-570	**[Cause]** A client certificate authentication error occurred on the HTTP server. **[Remedy]** Check the followings: • The destination HTTP server for the scanned document is accessible by PC. • The SSL client certificate is registered on the machine. • The device certificate is correctly registered on the HTTP server.
018-571	**[Cause]** An internal error occurred. **[Remedy]** Perform the same operation again. If the problem persists, contact our Customer Support Center.
018-572	**[Cause]** The specified context name contains invalid characters. **[Remedy]** Check whether the specified context name is correct.
018-573	**[Cause]** The specified connection name contains invalid characters. **[Remedy]** Check whether the specified connection name is correct.
018-574	**[Cause]** The specified volume name contains invalid characters. **[Remedy]** Check whether the specified volume name is correct.
018-575	**[Cause]** The specified user name or password contains invalid characters. **[Remedy]** Check whether the specified user name or password is correct.
018-576	**[Cause]** The specified path name contains invalid characters. **[Remedy]** Check whether the specified path name is correct.
018-577	**[Cause]** The specified file name contains invalid characters. **[Remedy]** Check whether the specified file name is correct.
018-578	**[Cause]** The specified server or tree name does not exist. **[Remedy]** Check the followings: • The network cable connection on the machine • The NetWare server is accessible by PC • The NetWare server or tree name Run DSREPAIR at the server console on the NetWare server.
018-579	**[Cause]** The hard disk on the NetWare server may be full. **[Remedy]** Check the followings: • The NetWare server is accessible by PC • The free space of the server to store data Run DSREPAIR at the server console on the NetWareserver.
018-580	**[Cause]** The specified volume name does not exist on the NetWare server. **[Remedy]** Check the followings: • The NetWare server is accessible by PC • The volume name Run DSREPAIR at the server console on the NetWare server.

Error Code	Cause and Remedy
018-581	**[Cause]** The specified directory path does not exist on the NetWare server. **[Remedy]** Check the followings: • The NetWare server is accessible by PC • The directory path name Run DSREPAIR at the server console on the NetWare server.
018-582	**[Cause]** The followings may be the cause: • The login user does not have Open rights to the file. • The login user does not have Create rights to create a file. • The login user does not have Access rights to the directory. • The login user does not have Read rights to the file. • The login user does not have Write rights to the file. • The login user does not have Delete rights of the directory or file. • Made a delete request to the directories or files but all of them are read-only. • Made a delete request to the directories or files but some of them are read-only. **[Remedy]** **1)** Check whether the NetWare server is accessible by PC. **2)** Check the user has the following rights. • Open rights to the file • Create rights to a file • Access rights to the directory • Read rights to the file • Write rights to the file • Delete rights to the directory or file **3)** Run DSREPAIR at the server console on the NetWare server.
018-583	**[Cause]** A hard disk error occurred on the NetWare server. **[Remedy]** **1)** Check the status of the HDD on the NetWare server.. **2)** Check whether the NetWare server is accessible by PC. **3)** Run DSREPAIR at the server console on the NetWare server.
018-584	**[Cause]** The followings may be the cause: • The communication is disconnected while reading or writing due to some reason • Close process of the file failed due to some reason **[Remedy]** **1)** Check whether the NetWare server is accessible by PC. **2)** Run DSREPAIR at the server console on the NetWare server.
018-585	**[Cause]** The followings may be the cause: • The specified folder or file is in use by another user • Made a delete request to the directories or files though some of them are in use by another user • Made a delete request to the directories or files though all of them are in use by another user **[Remedy]** **1)** Check whether the NetWare server is accessible by PC. **2)** Check the status of use of the other users. **3)** Run DSREPAIR at the server console on the NetWare server.

Error Code	Cause and Remedy
018-586	**[Cause]** Login to the NetWare server was denied. **[Remedy]** Check the followings: • The NetWare server is accessible by PC • Login user name • Login password • Volume name • Server or tree name • Context name Run DSREPAIR at the server console on the NetWare server.
018-587	**[Cause]** There are duplicate file names. [Do Not Save] is set as a handling method when names are duplicated for scanned files. **[Remedy]** Set the process to be executed in case of a file name duplication to other than [Do Not Save].
018-588	**[Cause]** Detected an incorrect filing policy (when add was selected) after connecting to the server. **[Remedy]** When [Rename New File] is set as the process to be executed when file names are duplicate, confirm that the file format is not multi-page.
018-589	**[Cause]** Failed to access the NEXTNAME.DAT file. **[Remedy]** When [Rename New File] is set as the process to be executed when file names are duplicate, check the NEXTNAME.DAT file is correct.
018-590	**[Cause]** A file or folder of the same name was detected on the server. **[Remedy]** Take one of the following measures: **1)** Execute the operation again by not accessing the same folder or the same server from multiple machines. **2)** If the error still is not resolved, contact our Customer Support Center.
018-591	**[Cause]** When the machine was connected to the server and the name of a file or folder on the server was determined, the suffix of the name of the file or folder exceeded the limit value. **[Remedy]** Change the file name or forwarding destination folder of the scan server. Also try moving or deleting the files within the forwarding destination folder.
018-592	**[Cause]** Failed to delete a scan lock folder. **[Remedy]** Take one of the following measures: **1)** If an existing lock directory (*.LCK) remains in the forwarding destination, delete it manually, and then execute the job again. **2)** Confirm that there is a folder with the name specified.
018-593	**[Cause]** Failed to create the scan lock folder. **[Remedy]** If an existing lock directory (*.LCK) remains in the forwarding destination, delete it manually, and then execute the job again.

Error Code	Cause and Remedy
018-595	**[Cause]** Multiple entries containing the same smart card information were detected in the database of the LDAP server. **[Remedy]** Correct the temporary user entries of the LDAP server so that they do not contain the same smart card information.
018-596	**[Cause]** An error occurred during LDAP server authentication. **[Remedy]** Execute the operation again. If the error still is not resolved, contact our Customer Support Center.
018-700	**[Cause]** The network for Web Applications is being initialized. **[Remedy]** Wait for a while, and then execute the operation again.
018-701	**[Cause]** An LDAP server protocol error occurred as a result of the Address Book operation. The server returned RFC2251 Result Message No "1" (operations error) for Address Book query. **[Remedy]** Check whether [LDAP Server/Directory Service Settings] under [Remote Authentication/Directory Service] has been set correctly. Or, the server may have a problem. Consult your network administrator.
018-702	**[Cause]** An LDAP server protocol error occurred as a result of the Address Book operation. The server returned RFC2251 Result Message No "2" (protocol error) for Address Book query. **[Remedy]** Have your network administrator confirm the LDAP server settings, and execute the operation again.
018-703	**[Cause]** An LDAP server protocol error occurred as a result of the Address Book operation. The server returned RFC2251 Result Message No "3" (time limit exceeded) for Address Book query. **[Remedy]** Change the search conditions/start position to narrow the search range, and execute the operation again. If the error still is not resolved, consult your network administrator.
018-704	**[Cause]** An LDAP server protocol error occurred as a result of the Address Book operation. The server returned RFC2251 Result Message No "4" (size limit exceeded) for Address Book query. **[Remedy]** Change the search conditions/start position to narrow the search range, and execute the operation again. If the error still is not resolved, consult your network administrator.
018-705	**[Cause]** An LDAP server protocol error occurred as a result of the Address Book operation. The server returned RFC2251 Result Message No "5" (compare false) for Address Book query. **[Remedy]** The result may differ from the specified content. Have your network administrator confirm the LDAP server status.
018-706	**[Cause]** An LDAP server protocol error occurred as a result of the Address Book operation. The server returned RFC2251 Result Message No "6" (compare true) for Address Book query. **[Remedy]** The desired result has been achieved. No problem occurred.
018-707	**[Cause]** An LDAP server protocol error occurred as a result of the Address Book operation. The server returned RFC2251 Result Message No "7" (specified authentication method not supported) for Address Book query. **[Remedy]** The LDAP server does not support the specified authentication method. Change the authentication method. Consult your system administrator for another method.

Error Code	Cause and Remedy
018-708	**[Cause]** An LDAP server protocol error occurred as a result of the Address Book operation. The server returned RFC2251 Result Message No "8" (strong authentication required) for Address Book query. **[Remedy]** Check whether the authentication settings are correct. Consult your system administrator about the authentication, and execute the operation again.
018-709	**[Cause]** An error occurred for external access (Web Applications). **[Remedy]** Take one of the following measures depending on the setting: For IPv4 environment • Check the IPv4 address of the machine. • Confirm whether the network cable is connected correctly. • Check the address of the DHCP server. For IPv6 environment • Confirm whether the global address distributed from an IPv6 router is assigned to the IPv6 address of the machine. • Confirm whether the network cable is connected correctly. • Confirm whether the IPv6 router is set correctly.
018-710	**[Cause]** An LDAP server protocol error occurred as a result of the Address Book operation. The server returned RFC2251 Result Message No "10" (referral) for Address Book query. **[Remedy]** No registered items were found in the specified retrieval range. Have your network administrator confirm the authentication settings.
018-711	**[Cause]** An LDAP server protocol error occurred as a result of the Address Book operation. The server returned RFC2251 Result Message No "11" (admin limit exceeded) for Address Book query. **[Remedy]** Have your network administrator confirm the operational status of the server.
018-712	**[Cause]** An LDAP server protocol error occurred as a result of the Address Book operation. The server returned RFC2251 Result Message No "12" (unavailable extension) for Address Book query. **[Remedy]** Have your network administrator confirm the operational status of the server.
018-713	**[Cause]** An LDAP server protocol error occurred as a result of the Address Book operation. The server returned RFC2251 Result Message No "13" (confidentiality required) for Address Book query. **[Remedy]** Have your network administrator confirm the operational status of the server.
018-714	**[Cause]** An LDAP server protocol error occurred as a result of the Address Book operation. The server returned RFC2251 Result Message No "14" (SASL bind in progress) for Address Book query. **[Remedy]** Retry after waiting for a while. If the error still is not resolved, consult your network administrator.

Error Code	Cause and Remedy
018-715	**[Cause]** Kerberos server authentication protocol error. There is no authentication method which supports both the machine authentication and Kerberos server authentication. **[Remedy]** Take one of the following measures: • Set the appropriate authentication method in the Kerveros server. • Disable the FIPS140 validation mode of the machine. If the error still is not resolved, contact our Customer Support Center.
018-716	**[Cause]** An LDAP server protocol error occurred as a result of the Address Book operation. The server returned RFC2251 Result Message No "16" (no such attribute) for Address Book query. **[Remedy]** The LDAP server has an attribute problem. Have your network administrator confirm the LDAP server status.
018-717	**[Cause]** An LDAP server protocol error occurred as a result of the Address Book operation. The server returned RFC2251 Result Message No "17" (undefined type) for Address Book query. **[Remedy]** The LDAP server has an attribute problem. Have your network administrator confirm the LDAP server status.
018-718	**[Cause]** An LDAP server protocol error occurred as a result of the Address Book operation. The server returned RFC2251 Result Message No "18" (inappropriate matching) for Address Book query. **[Remedy]** The LDAP server has an attribute problem. Have your network administrator confirm the LDAP server status.
018-719	**[Cause]** An LDAP server protocol error occurred as a result of the Address Book operation. The server returned RFC2251 Result Message No "19" (constraint violation) for Address Book query. **[Remedy]** The LDAP server has an attribute problem. Have your network administrator confirm the LDAP server status.
018-720	**[Cause]** An LDAP server protocol error occurred as a result of the Address Book operation. The server returned RFC2251 Result Message No "20" (attribute exists) for Address Book query. **[Remedy]** The LDAP server has an attribute problem. Have your network administrator confirm the LDAP server status.
018-721	**[Cause]** An LDAP server protocol error occurred as a result of the Address Book operation. The server returned RFC2251 Result Message No "21" (invalid syntax) for Address Book query. **[Remedy]** The LDAP server has an attribute problem. Have your network administrator confirm the LDAP server status.
018-722	**[Cause]** The machine cannot connect to Google Cloud Print, because of a network error. **[Remedy]** Check that the network cable is connected properly. Also check that the environmental settings are adequate.
018-723	**[Cause]** The machine cannot connect to Google Cloud Print, because of a certificate error. **[Remedy]** Check that the root CA certificate registered to the machine and the certificate verification settings are correct.

Error Code	Cause and Remedy
018-724	**[Cause]** The machine cannot connect to Google Cloud Print, because of an SSL communication error. **[Remedy]** Check the SSL settings.
018-725	**[Cause]** The user password set in the Kerberos server expired. **[Remedy]** Extend the expiration date of the password.
018-726	**[Cause]** The root (or intermediate) CA certificate on the smart card is not registered on the machine. **[Remedy]** Register the root (or intermediate) CA certificate on the smart card on the machine.
018-727	**[Cause]** Authentication by the Kerberos server failed. **[Remedy]** Check the certificate on the smart card, and then update the certificate if it is invalid or revoked. Also, check whether the certificate is enabled in the server.
018-728	**[Cause]** Authentication by the Kerberos server failed. **[Remedy]** Take one of the following measures: • When the root CA certificate of the KDC certificate is not registered, register the root CA certificate. • When the KDC certificate is revoked, update the KDC certificate of the server. • Confirm that the address of the Kerberos server set in the machine and the address on the KDC certificate of the server match.
018-729	**[Cause]** The machine cannot connect to Google Cloud Print, because of a time out error. **[Remedy]** Wait for a while, and then execute the procedure again. If the problem still exists even after the remedy, check that the network cable is connected properly. Also check that the environmental settings are adequate.
018-730	**[Cause]** The machine cannot connect to Google Cloud Print, because of a network error. **[Remedy]** Check that the network cable is connected properly. Also check that the environmental settings are adequate. If the problem still remains even when there is nothing wrong, contact our Customer Support Center.
018-731	**[Cause]** The printing job was canceled due to insufficient memory capacity for the hard disk. **[Remedy]** Check the hard disk capacity, and delete unnecessary data. Complete all the active jobs, and then execute the operation again.
018-732	**[Cause]** An LDAP server protocol error occurred as a result of the Address Book operation. The server returned RFC2251 Result Message No "32" (no such object) for Address Book query. **[Remedy]** The specified e-mail address does not exist. Confirm the e-mail address you entered or the e-mail address registered on the LDAP server.

Error Code	Cause and Remedy
018-733	**[Cause]** An LDAP server protocol error occurred as a result of the Address Book operation. The server returned RFC2251 Result Message No "33" (incorrect alias) for Address Book query. **[Remedy]** The LDAP server has a name problem. Have your network administrator confirm the LDAP server status.
018-734	**[Cause]** An LDAP server protocol error occurred as a result of the Address Book operation. The server returned RFC2251 Result Message No "34" (invalid DN syntax) for Address Book query. **[Remedy]** The LDAP server has a name problem. Confirm the user name and password to cancel an incorrect password. If the error still is not resolved, have your network administrator confirm the authentication settings and status of the LDAP server.
018-735	**[Cause]** An LDAP server protocol error occurred as a result of the Address Book operation. The server returned RFC2251 Result Message No "35" (object is leaf) for Address Book query. **[Remedy]** The LDAP server has a name problem. Have your network administrator confirm the LDAP server status.
018-736	**[Cause]** An LDAP server protocol error occurred as a result of the Address Book operation. The server returned RFC2251 Result Message No "36" (alias differencing problem) for Address Book query. **[Remedy]** The LDAP server has a name problem. Have your network administrator confirm the LDAP server status.
018-737	**[Cause]** An internal error occurred. **[Remedy]** Execute the operation again. If the problem still exists even after the remedy, contact our Customer Support Center.
018-738	**[Cause]** The machine cannot connect to Google Cloud Print, because of a network error. **[Remedy]** Check that the network cable is connected properly. Also check that the environmental settings are adequate.
018-739	**[Cause]** An internal error occurred. **[Remedy]** Execute the operation again. If the problem still exists even after the remedy, contact our Customer Support Center.
018-740	**[Cause]** The machine cannot connect to Google Cloud Print, because of a certificate error. **[Remedy]** Check that the root CA certificate registered to the machine and the certificate verification settings are correct.
018-741	**[Cause]** An internal error occurred. **[Remedy]** Execute the operation again. If the problem still exists even after the remedy, contact our Customer Support Center.
018-743	**[Cause]** The machine cannot connect to Google Cloud Print, because of a proxy connection error. **[Remedy]** Check that the proxy server settings are adequate.
018-744	**[Cause]** The machine cannot connect to Google Cloud Print, because DNS failed to resolve the name. **[Remedy]** Check that the DNS settings are adequate.

Error Code	Cause and Remedy
018-745	**[Cause]** The machine cannot connect to Google Cloud Print, because of a proxy connection error. **[Remedy]** Check that the proxy server settings are adequate.
018-746	**[Cause]** The machine cannot connect to Google Cloud Print, because DNS failed to resolve the name. **[Remedy]** Check that the DNS settings are adequate.
018-747	**[Cause]** The SMB server of the destination computer cannot be found while transferring data using SMB of the Scan to PC service. **[Remedy]** Take one of the following measures. • Confirm the connection of the network cable. • Check whether the IP address is correct when an IP address is used for the transferring destination address. • For communications over subnet, confirm the WINS server settings, and check whether the server address can be resolved correctly. • Confirm the file Sharing service (communicating via port 137 (UDP), port 138 (UDP), and port 139 (TCP)) is authorized for the transferring destination server, router between the machine and server, and virus security software or firewall software on the forwarding destination server.
018-748	**[Cause]** An LDAP server protocol error occurred as a result of the Address Book operation. The server returned RFC2251 Result Message No "48" (inappropriate authentication) for Address Book query. **[Remedy]** The LDAP server has a security problem. Have your network administrator confirm the authentication settings on the LDAP server.
018-749	**[Cause]** An LDAP server protocol error occurred as a result of the Address Book operation. The server returned RFC2251 Result Message No "49" (invalid credentials) for Address Book query. The address search was performed with an incorrect authentication user name and password. **[Remedy]** The LDAP server has a security problem. Confirm your authentication user name and password to cancel an incorrect login name. If the error still is not resolved, have your network administrator confirm the authentication settings on the LDAP server.
018-750	**[Cause]** An LDAP server protocol error occurred as a result of the Address Book operation. The server returned RFC2251 Result Message No "50" (insufficient access) for Address Book query. **[Remedy]** The LDAP server has a security problem. Have your network administrator confirm the access rights for the LDAP server.
018-751	**[Cause]** An LDAP server protocol error occurred as a result of the Address Book operation. The server returned RFC2251 Result Message No "51" (busy) for Address Book query. **[Remedy]** The service has a problem. Retry after waiting for a while. If the error still is not resolved, consult your network administrator.

Error Code	Cause and Remedy
018-752	**[Cause]** An LDAP server protocol error occurred as a result of the Address Book operation. The server returned RFC2251 Result Message No "52" (unavailable) for Address Book query. **[Remedy]** The LDAP server has a service problem. Retry after waiting for a while. If the error still is not resolved, consult your network administrator.
018-753	**[Cause]** An LDAP server protocol error occurred as a result of the Address Book operation. The server returned RFC2251 Result Message No "53" (unwilling to perform) for Address Book query. **[Remedy]** The LDAP server has a service problem. Retry after waiting for a while. If the error still is not resolved, consult your network administrator.
018-754	**[Cause]** An LDAP server protocol error occurred as a result of the Address Book operation. The server returned RFC2251 Result Message No "54" (loop detected) for Address Book query. **[Remedy]** The LDAP server has a service problem. Have your network administrator confirm the operational status of the service on the LDAP server.
018-755	**[Cause]** The SMB server specified as the destination does not respond to the machine while transferring data using SMB of the Scan to PC service. **[Remedy]** Confirm the file Sharing service (communicating via port 139 (TCP), and port 445 (TCP)) is authorized for the transferring destination server, router between the machine and server, and virus security software or firewall software on the forwarding destination server.
018-758	**[Cause]** The save location or file name of a scanned image has a problem while transferring data using SMB of the Scan to PC service. Probable cause is that the specified save location does not exist on the server. **[Remedy]** Take one of the following measures. • Check whether the save location is correct. • Check whether the specified folder name can be used in the SMB server.
018-759	**[Cause]** Invalid characters are used for the save location or file name of a scanned image while transferring data using SMB of the Scan to PC service. **[Remedy]** Check the followings for the save location or file name of a scanned image set to the machine. • Confirm the save location name doesnot include the following 10 invalid characters:" / : | < > ; , * ?. • Confirm the file name doesnot include the following 11 invalid characters: " / : | < > ; , * ? \ • Confirm there is no space in the head and end of a string of characters. • Confirm there is no period in the head and end of a string of characters.

Error Code	Cause and Remedy
018-760	**[Cause]** Because the specified save location has the Distributed File System (DFS) settings, it is linked to another shared folder while transferring data using SMB of the Scan to PC service. **[Remedy]** **1)** Select [Start] > [Programs] > [Administrative Tools] >[Distributed File System] on the SMB server. **2)** Select the specified save location from the left side frame of the [Distributed File System] window, and then confirm the target information displayed on the right side frame of the window. **3)** Specify the SMB server, shared name, and save location based on the information you confirmed in step 2.
018-761	**[Cause]** The memory stored in the saving destination PC is insufficient while transferring data using SMB of the Scan to PC service. **[Remedy]** Check the usage condition of he memory. If the remaining capacity of the machine's memory is low, exit out of the applications which are not used.
018-762	**[Cause]** A time out error occurred because it takes time to receive a response from the saving destination PC while transferring data using SMB of the Scan to PC service. **[Remedy]** Check whether the virus security software is working on the saving destination PC. Some software takes time to receive a response from the PC.If the software is working, reduce the number of document pages to scale down the file size."
018-763	**[Cause]** The character code conversion is failed in the machine while transferring data using SMB of the Scan to PC service. **[Remedy]** Confirm the server name, share name, and pass name does not include the letters unique to the machine model.If the letters are included, change the name not to include the letters.
018-764	**[Cause]** An LDAP server protocol error occurred as a result of the Address Book operation. The server returned RFC2251 Result Message No "64" (naming violation) for Address Book query. **[Remedy]** The LDAP server has an update problem. Have your network administrator confirm the LDAP server status.
018-765	**[Cause]** An LDAP server protocol error occurred as a result of the Address Book operation. The server returned RFC2251 Result Message No "65" (object class violation) for Address Book query. **[Remedy]** The LDAP server has an update problem. Have your network administrator confirm the LDAP server status.
018-766	**[Cause]** An LDAP server protocol error occurred as a result of the Address Book operation. The server returned RFC2251 Result Message No "66" (not allowed on nonleaf) for Address Book query. **[Remedy]** The LDAP server has an update problem. Have your network administrator confirm the LDAP server status.
018-767	**[Cause]** An LDAP server protocol error occurred as a result of the Address Book operation. The server returned RFC2251 Result Message No "67" (not allowed on RDN) for Address Book query. **[Remedy]** The LDAP server has an update problem. Have your network administrator confirm the LDAP server status.

Error Code	Cause and Remedy
018-768	**[Cause]** An LDAP server protocol error occurred as a result of the Address Book operation. The server returned RFC2251 Result Message No "68" (already exists) for Address Book query. **[Remedy]** The LDAP server has an update problem. Have your network administrator confirm the LDAP server status.
018-769	**[Cause]** An LDAP server protocol error occurred as a result of the Address Book operation. The server returned RFC2251 Result Message No "69" (no object class modifications) for Address Book query. **[Remedy]** The LDAP server has an update problem. Have your network administrator confirm the LDAP server status.
018-770	**[Cause]** An LDAP server protocol error occurred as a result of the Address Book operation. The server returned RFC2251 Result Message No "70" (results too large) for Address Book query. **[Remedy]** Change the search conditions/start position to narrow the search range, and execute the operation again. If the error still is not resolved, consult your network administrator.
018-771	**[Cause]** An LDAP server protocol error occurred as a result of the Address Book operation. The server returned RFC2251 Result Message No "71" (affecting multiple DSAs) for Address Book query. **[Remedy]** Have your network administrator confirm the LDAP server status.
018-772	**[Cause]** Failed to transfer data using SMB of the Scan to PC service because the specified shared name does not exist. **[Remedy]** Confirm that the specified shared name exits in the destination PC.

Error Code	Cause and Remedy
018-773	**[Cause]** An LDAP server protocol error occurred as a result of the Address Book operation. The server returned RFC2251 Result Message No "71" (affecting multiple DSAs) for Address Book query. **[Remedy]** Have your network administrator confirm the LDAP server status. **[Cause]** Probable causes are as follows: **1)** The machine failed to transfer data using SMB of the Scan to PC service because Invalid characters are used in the specified shared name. **2)** The machine failed to transfer data using SMB of the Scan to PC service because access privilege does not set on the specified shared name when the server is Macintosh. **[Remedy]** Take one of the following measures: • Check whether the following invalid characters are included in the shared name set in the machine: "" / : | < > ; , * ? \ [ ] + = • Check whether a space character is included at the top or end of the shared name set in the machine. • Check whether the shared name set in the machine is specified only by a period. When the destination computer is Macintosh, you need to change the access privileges for the user for shared folder. For information about necessary accounting settings, consult your system administrator.The following is an example of a procedure for Mac OS X 10.6. **Note** • It is recommended to create a dedicated account for data transfer. You can create and set the account on the dialog box that appears by choosing Apple menu > [System Preferences] and then clicking [Accounts] icon. **1)** From Apple menu, choose [System Preferences], and then click [Sharing]. **2)** Make sure that [File Sharing] check box is selected. **3)** Select the folder being shared from folders listed in the [Shared Folders] filed. **4)** Choose [Read & Write] as privilege option for the user listed in the [Users] field. **Note** • For information on how to change the access privilege settings on other version of Mac OS, consult your system administrator or the official website of Apple Inc.
018-780	**[Cause]** An LDAP server protocol error occurred as a result of the Address Book operation. The server returned RFC2251 Result Message No "80" (unknown error) for Address Book query. **[Remedy]** Have your network administrator confirm the LDAP server status.

Error Code	Cause and Remedy
018-781	**[Cause]** An LDAP server protocol error occurred as a result of the Address Book operation. Connection to the server cannot be established for the Address Book query. **[Remedy]** Take one of the following measures: • Confirm the network cable connection. • If the network cable connection has no problem, confirm the active status of the target server. • Check whether the server name has been correctly set for [LDAP Server/Directory Service Settings] under [Remote Authentication/Directory Service].
018-782	**[Cause]** An LDAP server protocol error occurred as a result of the Address Book operation. The server returned RFC2251 Result Message No "82" (program error or SASL authentication error) for Address Book query. **[Remedy]** Have your network administrator confirm the LDAP server status.
018-783	**[Cause]** An LDAP server protocol error occurred as a result of the Address Book operation. The server returned RFC2251 Result Message No "83" (encoding error) for Address Book query. **[Remedy]** Have your network administrator confirm the LDAP server status.
018-784	**[Cause]** An LDAP server protocol error occurred as a result of the Address Book operation. The server returned RFC2251 Result Message No "84" (decoding error) for Address Book query. **[Remedy]** Have your network administrator confirm the LDAP server status.
018-785	**[Cause]** An LDAP server protocol error occurred as a result of the Address Book operation. The server returned RFC2251 Result Message No "85" (timeout) for Address Book query. **[Remedy]** Change the search conditions/start position to narrow the search range, and execute the operation again. If the error still is not resolved, consult your network administrator.
018-786	**[Cause]** An LDAP server protocol error occurred as a result of the Address Book operation. The server returned RFC2251 Result Message No "86" (unknown authentication method) for Address Book query. **[Remedy]** Have your network administrator confirm the LDAP server status.
018-787	**[Cause]** An LDAP server protocol error occurred as a result of the Address Book operation. The server returned RFC2251 Result Message No "87" (search filter error) for Address Book query. **[Remedy]** Confirm the search conditions set on Address Book. If the error still is not resolved, consult your network administrator.
018-788	**[Cause]** An LDAP server protocol error occurred as a result of the Address Book operation. The server returned RFC2251 Result Message No "88" (user cancelled operation) for Address Book query. **[Remedy]** Have your network administrator confirm the LDAP server status.

Error Code	Cause and Remedy
018-789	**[Cause]** An LDAP server protocol error occurred as a result of the Address Book operation. The server returned RFC2251 Result Message No "89" (incorrect parameter) for Address Book query. **[Remedy]** Have your network administrator confirm the LDAP server status.
018-790	**[Cause]** An LDAP server protocol error occurred as a result of the Address Book operation. The server returned RFC2251 Result Message No "90" (no memory) for Address Book query. **[Remedy]** Have your network administrator confirm the LDAP server status.
018-791	**[Cause]** An LDAP server protocol error occurred as a result of the Address Book operation. The server returned RFC2251 Result Message No "91" (server connection error) for Address Book query. **[Remedy]** Have your network administrator confirm the LDAP server status.
018-792	**[Cause]** An LDAP server protocol error occurred as a result of the Address Book operation. The server returned RFC2251 Result Message No "92" (unsupported feature) for Address Book query. **[Remedy]** Have your network administrator confirm the LDAP server status.
018-793	**[Cause]** An LDAP server protocol error occurred as a result of the Address Book operation. The server returned RFC2251 Result Message No "93" (no results returned) for Address Book query. **[Remedy]** Have your network administrator confirm the LDAP server status.
018-794	**[Cause]** An LDAP server protocol error occurred as a result of the Address Book operation. The server returned RFC2251 Result Message No "94" (no more results) for Address Book query. **[Remedy]** Have your network administrator confirm the LDAP server status.
018-795	**[Cause]** An LDAP server protocol error occurred as a result of the Address Book operation. The server returned RFC2251 Result Message No "95" (results remaining) for Address Book query. **[Remedy]** Have your network administrator confirm the LDAP server status.
018-796	**[Cause]** An LDAP server protocol error occurred as a result of the Address Book operation. The server returned RFC2251 Result Message No "96" (client loop detected) for Address Book query. **[Remedy]** Have your network administrator confirm the LDAP server status.
018-797	**[Cause]** An LDAP server protocol error occurred as a result of the Address Book operation. The server returned RFC2251 Result Message No "97" (referral limit exceeded) for Address Book query. **[Remedy]** Have your network administrator confirm the LDAP server status.

Error Code	Cause and Remedy
021-210 021-211 021-212	**[Cause]** An error occurred in the IC card reader(optional). **[Remedy]** Check the connection between the IC Card Reader and the machine. Switch off the machine power, make sure that the touch screen is blank, and then switch on the machine power. If the error still is not resolved, the IC Card Reader may be defective. Connect an unbroken IC Card Reader and execute the operation again.
021-213	**[Cause]** There is a problem with the unit price table settings for the related product. **[Remedy]** The system administrator should exports the unit price table and modify it using CentreWare Internet Services. Set a number from 1 to 9,999,999 and import the table modified to the machine.
021-214	**[Cause]** An error occurred during encrypted communication between the machine and the USB memory device. **[Remedy]** Switch off the machine power, make sure that the touch screen is blank, and then switch on the machine power. Execute the operation again. If the error still is not resolved, contact our Customer Support Center.
021-215	**[Cause]** The accounting/billing device connected does not match the device set on the machine. **[Remedy]** Change the setting on the machine or connect the correct accounting/billing device, and switch off the machine power, make sure that the touch screen is blank, and then switch on the machine power.
021-360 021-361	**[Cause]** An error occurred. **[Remedy]** Switch off the machine power, make sure that the touch screen is blank, and then switch on the machine power. If the same message is displayed again, contact our Customer Support Center.
021-401	**[Cause]** The number of authentication devices such as IC Card Reader(optional) connected exceeds the setting value. **[Remedy]** Disconnect the authentication device connected.
021-402	**[Cause]** The address of the proxy server name is incorrect. **[Remedy]** Check the followings: • LAN cable connection • DNS server address setting • The default gateway setting • The subnet mask setting If the error still is not resolved after checking the above settings, there may be a network failure or the proxy server settings may be changed or failed. Consult your system administrator. If the network works normally but the error still is not resolved, contact our Customer Support Center.

Error Code	Cause and Remedy
021-403	**[Cause]** Failed to resolve the address of the EP center of Fuji Xerox or EP communication aggregate server. **[Remedy]** Check the followings: • LAN cable connection • DNS server address setting • The default gateway setting • The subnet mask setting If the error still is not resolved after checking the above settings, there may be a network failure or the proxy server settings may be changed or failed. Consult your system administrator. If the network works normally but the error still is not resolved, contact our Customer Support Center.
021-404	**[Cause]** Failed to connect the server or the proxy server. One of the probable cause is that the power of these servers is switched off. **[Remedy]** Check the followings: • LAN cable connection • DNS server address setting • The default gateway setting • The subnet mask setting • EP proxy server setting(For BB-Direct configuration) If the error still is not resolved after checking the above settings, there may be a network failure or the proxy server settings may be changed or failed. Consult your system administrator. If the network works normally but the error still is not resolved, contact our Customer Support Center. Also, when FQDN of the EP communication aggregate server is changed for the EP communication aggregate server configuration, contact our Customer Support Center.
021-405	**[Cause]** An error occurred in the SSL communication with the external server. **[Remedy]** Switch off the machine power, make sure that the touch screen is blank, and then switch on the machine power. If the error still is not resolved, contact our Customer Support Center.
021-406	**[Cause]** The SSL certificate of the external server is not correct. **[Remedy]** Switch off the machine power, make sure that the touch screen is blank, and then switch on the machine power. If the error still is not resolved, contact our Customer Support Center.
021-407	**[Cause]** Failed to authorize the proxy server while connecting to the EP system via the Internet.(Receiving HTTP status code 407) **[Remedy]** Check the followings: • The login user of the EP proxy server • The password of the EP proxy server If the error still is not resolved after checking the above settings, there may be a network failure or the proxy server settings may be changed or failed. Consult your system administrator. If the network works normally but the error still is not resolved, contact our Customer Support Center.

Error Code	Cause and Remedy
021-408	**[Cause]** A time out error occurred while connecting to the EP system via the Internet. **[Remedy]** Check the followings: • LAN cable connection • DNS server address setting • The default gateway setting • The subnet mask setting • EP proxy server setting(For BB-Direct configuration) If the error still is not resolved after checking the above settings, there may be a network failure or the proxy server settings may be changed or failed. Consult your system administrator. If the network works normally but the error still is not resolved, contact our Customer Support Center. Also, when FQDN of the EP communication aggregate server is changed for the EP communication aggregate server configuration, contact our Customer Support Center.
021-409 **021-542** **021-543**	**[Cause]** An error occurred in the machine. **[Remedy]** Switch off the machine power, make sure that the touch screen is blank, and then switch on the machine power. If the error still is not resolved, contact our Customer Support Center.
021-410 **021-411**	**[Cause]** A communication error occurred while connecting (acquiring the EP certificate) to CA via the Internet. **[Remedy]** Check the followings: • LAN cable connection • DNS server address setting • The default gateway setting • The subnet mask setting • EP proxy server setting(For BB-Direct configuration) If the error still is not resolved after checking the above settings, there may be a network failure or the proxy server settings may be changed or failed. Consult your system administrator. If the network works normally but the error still is not resolved, contact our Customer Support Center.
021-412	**[Cause]** An error occurred while connecting to the EP system via the Internet. There is a problem with the address of the EP proxy server name. **[Remedy]** Check the followings: • The LAN cable connection • The DNS server address setting • The default gateway setting • The subnet mask setting • The EP proxy server URL setting If the error still is not resolved after checking the above settings, there may be a network failure. Consult your system administrator. If the network works normally but the error still is not resolved, contact our Customer Support Center.

Error Code	Cause and Remedy
021-413 021-416	**[Cause]** An error occurred while connecting to the EP system via the Internet. **[Remedy]** Check the followings: • The LAN cable connection • The DNS server address setting • The default gateway setting • The subnet mask setting If the error still is not resolved after checking the above settings, there may be a network failure. Consult your system administrator. If the network works normally but the error still is not resolved, contact our Customer Support Center.
021-414	**[Cause]** An error occurred while connecting to the EP system via the Internet. **[Remedy]** Check the followings: • The LAN cable connection • The DNS server address setting • The default gateway setting • The subnet mask setting • The EP proxy server setting If the error still is not resolved after checking the above settings, there may be a network failure. Consult your system administrator. If the network works normally but the error still is not resolved, contact our Customer Support Center.
021-415	**[Cause]** An error occurred while the SSL/TLS communication to the EP system via the Internet. **[Remedy]** Check the followings: • The LAN cable connection • The DNS server address setting • The default gateway setting • The subnet mask setting • The EP proxy server setting If the error still is not resolved after checking the above settings, there may be a network failure. Consult your system administrator. If the network works normally but the error still is not resolved, contact our Customer Support Center.

Error Code	Cause and Remedy
021-417	**[Cause]** Failed to authorize the proxy server while connecting to the EP system via the Internet. **[Remedy]** Check the followings: • The EP proxy server URL setting • The login user of the EP proxy server • The password of the EP proxy server If the error still is not resolved after checking the above settings, there may be a network failure or the proxy server settings may be changed or failed. Consult your system administrator. If the network works normally but the error still is not resolved, contact our Customer Support Center.
021-418 021-419	**[Cause]** There is a problem with the format of the proxy setting file. **[Remedy]** The format of the proxy setting file registered in the HTTP server may be incorrect. Consult your system administrator. If the proxy setting file works normally but the error still is not resolved, contact our Customer Support Center.
021-420	**[Cause]** A time out error occurred while connecting to the EP system via the Internet Failed to obtain the proxy setting. **[Remedy]** Check the followings: • The LAN cable connection • The default gateway setting • The subnet mask setting • The EP proxy server setting • The working condition of the HTTP proxy server in which the proxy setting file is registered If the error still is not resolved after checking the above settings, there may be a network failure. Consult your system administrator. If the network works normally but the error still is not resolved, contact our Customer Support Center.
021-421	**[Cause]** A time out error occurred while connecting to the EP system via the Internet Failed to obtain the proxy setting. **[Remedy]** Check the followings: • The LAN cable connection • The default gateway setting • The subnet mask setting • The EP proxy server setting • The working condition of the HTTP proxy server in which the proxy setting file is registered If the error still is not resolved after checking the above settings, there may be a network failure. Consult your system administrator. If the network works normally but the error still is not resolved, contact our Customer Support Center.

Error Code	Cause and Remedy
021-422	**[Cause]** The proxy setting file is not found while connecting to the EP system via the Internet. **[Remedy]** Check the EP proxy server setting screen on CentreWare Internet Services. If the error still is not resolved after checking the setting, the proxy setting file may not be registered. Consult your system administrator. If the proxy setting file works normally but the error still is not resolved, contact our Customer Support Center.
021-423	**[Cause]** The size of the proxy setting file is too large. Failed to obtain the proxy setting file. **[Remedy]** Check the EP proxy server setting screen on CentreWare Internet Services. If the error still is not resolved after checking the setting, check the proxy setting file size. When the size exceeds 64 KB, keep the file size down. If the proxy setting file works normally but the error still is not resolved, contact our Customer Support Center.
021-424	**[Cause]** The URL of the proxy setting file to connect with the proxy server is incorrect while connecting to the EP system via the Internet. **[Remedy]** Check the EP proxy server setting screen on CentreWare Internet Services. If the error still is not resolved after checking the setting, consult your system administrator about the URL of the proxy setting file. Otherwise, check the URL of proxy setting file of the DHCP or DNS server as follows: • The DHCP option is "252". • The SRV record of the host "wpad.(domain name)" is correct. If the error still is not resolved, contact our Customer Support Center.
021-425	**[Cause]** A time out error occurred while connecting to the DHCP or DNS server via the Internet to obtain the URL (CURL) of the proxy setting file. **[Remedy]** Check the followings: • The LAN cable connection • The DNS server address settings • The default gateway setting • The EP proxy server setting (CURL) • The working condition of the DHCP or DNS server in which the proxy setting file is registered If the error still is not resolved after checking the above settings, there may be a network failure. Consult your system administrator. If the network works normally but the error still is not resolved, contact our Customer Support Center.

Error Code	Cause and Remedy
021-426	**[Cause]** The URL (CURL) of the proxy setting file is not found on the DHCP or DNS server while connecting to the EP system via the Internet to obtain the URL (CURL) of the proxy setting file. **[Remedy]** Check the followings: • The EP proxy server setting • The URL of the proxy setting file is registered on the DHCP or DNS server correctly
021-427	**[Cause]** [Cause] 3G connection by way of 3Gnet-BOX was lost due to the time-out. **[Remedy]** Switch off the machine power, make sure that the touch screen is blank, and then switch on the machine power. If the same message is displayed again, contact our Customer Support Center.
021-428	**[Cause]** 3G communication by way of 3Gnet-BOX is out of communication range. **[Remedy]** If the antenna is being fallen down, stand it upright. If you still have the problem, switch off the machine power, make sure that the touch screen is blank, and then switch on the machine power. If the same message is displayed again, contact our Customer Support Center.
021-429	**[Cause]** An error occurred in the SIM card which had been inserted to the 3Gnet-BOX. **[Remedy]** Switch off the machine power, make sure that the touch screen is blank, and then switch on the machine power. If the same message is displayed again, contact our Customer Support Center.
021-431	**[Cause]** USB connection with 3Gnet-BOX was failed. **[Remedy]** Check the USB cable of 3G net-BOX to see if it has come off. Connect the cable firmly if it is unplugged. If you still have the problem, switch off the machine power, make sure that the touch screen is blank, and then switch on the machine power. If the same message is displayed again, contact our Customer Support Center.
021-432	**[Cause]** 3G communication by 3Gnet-BOX was failed to start due to an error which had occurred in the machine. **[Remedy]** Switch off the machine power, make sure that the touch screen is blank, and then switch on the machine power. If the same message is displayed again, contact our Customer Support Center.
021-433	**[Cause]** An error occurred in the machine through the 3G communication by way of 3Gnet-BOX. **[Remedy]** Switch off the machine power, make sure that the touch screen is blank, and then switch on the machine power. If the same message is displayed again, contact our Customer Support Center.
021-434	**[Cause]** An error occurred in 3Gnet-BOX. **[Remedy]** Switch off the machine power, make sure that the touch screen is blank, and then switch on the machine power. If the same message is displayed again, contact our Customer Support Center.

Error Code	Cause and Remedy
021-435	**[Cause]** 3G communication by 3Gnet-BOX was failed to start because an error requiring the initialization of 3Gnet-BOX and the restart of the machine was detected. **[Remedy]** Switch off the machine power, make sure that the touch screen is blank, and then switch on the machine power. If the same message is displayed again, contact our Customer Support Center.
021-436	**[Cause]** An error occurred in the machine through the 3G communication by way of 3Gnet-BOX. **[Remedy]** Switch off the machine power, make sure that the touch screen is blank, and then switch on the machine power. If the same message is displayed again, contact our Customer Support Center.
021-437	**[Cause]** A communication error in DNS server occurred through 3G communication by way of 3Gnet-BOX. **[Remedy]** Switch off the machine power, make sure that the touch screen is blank, and then switch on the machine power. If the same message is displayed again, contact our Customer Support Center.
021-438	**[Cause]** The name resolution of EP server was failed in 3G communication by way of 3Gnet-BOX. **[Remedy]** Switch off the machine power, make sure that the touch screen is blank, and then switch on the machine power. If the same message is displayed again, contact our Customer Support Center.
021-439	**[Cause]** The name resolution of the certificate authority that had issued the EP client certificate was failed in 3G communication by way of 3Gnet-BOX. **[Remedy]** Switch off the machine power, make sure that the touch screen is blank, and then switch on the machine power. If the same message is displayed again, contact our Customer Support Center.
021-440	**[Cause]** The communication is disabled in 3G communication by way of 3Gnet-BOX with this machine. **[Remedy]** Switch off the machine power, make sure that the touch screen is blank, and then switch on the machine power. If the same message is displayed again, contact our Customer Support Center.
021-500	**[Cause]** The following operation is performed when the Auditron mode for the Fax service is enabled. • While a Send Fax job is processing, another job that the Auditron mode is enabled starts. • While another job that the Auditron mode is enabled is processing, a Send Fax job starts. **[Remedy]** Wait for the active job finishes, and start the next job.
021-501	**[Cause]** The communication with the EP system via the internet failed. **[Remedy]** Switch off the machine power, make sure that the touch screen is blank, and then switch on the machine power. If the error still is not resolved, contact our Customer Support Center.

Error Code	Cause and Remedy
021-502	**[Cause]** An error occurred while connecting to the EP system via the Internet. There is a problem with the address of the EP proxy server name. **[Remedy]** Switch off the machine power, make sure that the touch screen is blank, and then switch on the machine power. Execute the operation again. If the error still is not resolved, contact our Customer Support Center.
021-503	**[Cause]** An error occurred while connecting to the EP system via the Internet. There is a problem with the address of the EP proxy server name. **[Remedy]** Check the followings: • LAN cable connection • DNS server address setting • The default gateway setting • The subnet mask setting If the error still is not resolved after checking the above settings, there may be a network failure or the proxy server settings may be changed or failed. Consult your system administrator. If the network works normally but the error still is not resolved, contact our Customer Support Center.
021-504	**[Cause]** An error occurred while connecting to the EP system via the Internet. **[Remedy]** Check the followings: • LAN cable connection • DNS server address setting • The default gateway setting • The subnet mask setting If the error still is not resolved after checking the above settings, there may be a network failure or the proxy server settings may be changed or failed. Consult your system administrator. If the network works normally but the error still is not resolved, contact our Customer Support Center.
021-505	**[Cause]** The communication with the EP server failed. **[Remedy]** Switch off the machine power, make sure that the touch screen is blank, and then switch on the machine power. If the error still is not resolved, contact our Customer Support Center.
021-506	**[Cause]** The Certificate for the EP server is incorrect. **[Remedy]** Switch off the machine power, make sure that the touch screen is blank, and then switch on the machine power. Execute the operation again. If the error still is not resolved, contact our Customer Support Center.

Error Code	Cause and Remedy
021-507	**[Cause]** An error occurred while connecting to the EP system via the Internet. **[Remedy]** Check the followings: • The login user of the EP proxy server • The password of the EP proxy server If the error still is not resolved after checking the above settings, there may be a network failure or the proxy server settings may be changed or failed. Consult your system administrator. If the network works normally but the error still is not resolved, contact our Customer Support Center.
021-508	**[Cause]** An error occurred while connecting to the EP system via the Internet. **[Remedy]** Check the followings: • LAN cable connection • DNS server address setting • The default gateway setting • The subnet mask setting If the error still is not resolved after checking the above settings, there may be a network failure or the proxy server settings may be changed or failed. Consult your system administrator. If the network works normally but the error still is not resolved, contact our Customer Support Center.
021-509	**[Cause]** An error occurred while communicating with the EP server. **[Remedy]** Switch off the machine power, make sure that the touch screen is blank, and then switch on the machine power. If the error still is not resolved, contact our Customer Support Center.
021-510	**[Cause]** An error occurred while connecting to EP system via the Internet. **[Remedy]** Switch off the machine power, make sure that the touch screen is blank, and then switch on the machine power. Execute the operation again. If the error still is not resolved, contact our Customer Support Center.
021-511 021-512 021-513 021-514	**[Cause]** The machine has already been specified with the EP server. **[Remedy]** Switch off the machine power, make sure that the touch screen is blank, and then switch on the machine power. Execute the operation again. If the error still is not resolved, contact our Customer Support Center.
021-515 021-516	**[Cause]** The settings of the machine on the EP server are incorrect. **[Remedy]** Switch off the machine power, make sure that the touch screen is blank, and then switch on the machine power. Execute the operation again. If the error still is not resolved, contact our Customer Support Center.
021-517 021-518 021-519	**[Cause]** An error occurred while connecting to the EP system via the Internet. **[Remedy]** Wait for a while, and then execute the operation again. If the error still is not resolved, contact our Customer Support Center.

Error Code	Cause and Remedy
021-520 021-521 021-522	**[Cause]** An error occurred while connecting to the EP system via the Internet. **[Remedy]** Check the followings: • LAN cable connection • DNS server address setting • The default gateway setting • The subnet mask setting Check the following for BB-Direct configuration: • EP proxy server setting If the error still is not resolved after checking the above settings, there may be a network failure or the DNS server failure. Consult your system administrator. If the network works normally but the error still is not resolved, contact our Customer Support Center.
021-523	**[Cause]** An error occurred while communicating with the EP server. **[Remedy]** Enable the SOAP port, switch off the machine power, make sure that the touch screen is blank, and then switch on the machine power. If the error still is not resolved, contact our Customer Support Center.
021-524 021-525 021-526 021-527 021-528	**[Cause]** An error occurred while communicating with the EP server. **[Remedy]** Switch off the machine power, make sure that the touch screen is blank, and then switch on the machine power. If the same message is displayed again, contact our Customer Support Center.
021-529	**[Cause]** The machine attempted to upgrade the software of EP system via the Internet, but the latest software version is already installed. **[Remedy]** Contact our Customer Support Center.
021-530 021-531	**[Cause]** An error occurred while connecting to EP system via the Internet. **[Remedy]** Wait for a while, and then execute the operation again. If the error still is not resolved, contact our Customer Support Center.
021-532 021-533 021-534 021-535	**[Cause]** The machine attempted to upgrade the software of EP system via the Internet, but the software upgrade failed. **[Remedy]** Contact our Customer Support Center.
021-536	**[Cause]** The latest software version is not installed. **[Remedy]** Reboot the machine and update the software to the latest version. (The machine automatically reboots again.) Then, execute the operation again.
021-538	**[Cause]** The software upgrade was canceled since the machine was in use at the reserved time. **[Remedy]** Check with your system administrators. If the system administrators have not reserved the update, contact our Customer Support Center.

Error Code	Cause and Remedy
021-539	**[Cause]** The software upgrade was canceled since the machine power was off at the reserved time. **[Remedy]** Check with your system administrators. If the system administrators have not reserved the update, contact our Customer Support Center.
021-540	**[Cause]** The SW upgrade was canceled since the machine power was turned off while downloading the update file. **[Remedy]** If necessary, execute the operation again.
021-541	**[Cause]** The SW upgrade cannot be started since an incorrect setting is done to the machine **[Remedy]** If necessary, execute the operation again.
021-542 021-543	**[Cause]** An error occurred in the machine. **[Remedy]** Switch off the machine power, make sure that the touch screen is blank, and then switch on the machine power. If the error still is not resolved, contact our Customer Support Center.
021-545	**[Cause]** An error occurred while connecting to the EP system via the Internet. **[Remedy]** Confirm the contract period of the EP system. When the error is displayed during the contract period, contact our Customer Support Center.
021-565	**[Cause]** The 3G connection of 3Gnet-BOX is time out. **[Remedy]** Switch off the machine power, make sure that the touch screen is blank, and then switch on the machine power. If the error still is not resolved, contact our Customer Support Center.
021-566	**[Cause]** The 3G connection of 3Gnet-BOX is time out. **[Remedy]** Switch off the machine power, make sure that the touch screen is blank, and then switch on the machine power. If the error still is not resolved, contact our Customer Support Center.
021-567	**[Cause]** An error occurred in the SIM card inserted in 3Gnet-BOX. **[Remedy]** Switch off the machine power, make sure that the touch screen is blank, and then switch on the machine power. If the error still is not resolved, contact our Customer Support Center.
021-568	**[Cause]** Failure of time synchronization. **[Remedy]** Get the time of this machine's watch correct. If the error still is not resolved, switch off the machine power, make sure that the touch screen is blank, and then switch on the machine power. If the error still is not resolved, contact our Customer Support Center.
021-569	**[Cause]** Failure of the USB connection to 3Gnet-BOX. **[Remedy]** Make sure that the USB cable of 3Gnet-BOX is connected. If not, connect it correctly. If the error still is not resolved, switch off the machine power, make sure that the touch screen is blank, and then switch on the machine power. If the error still is not resolved, contact our Customer Support Center.

Error Code	Cause and Remedy
021-570	**[Cause]** An error occurred in the 3G connection of 3Gnet-BOX and connection is not started. **[Remedy]** Switch off the machine power, make sure that the touch screen is blank, and then switch on the machine power. If the error still is not resolved, contact our Customer Support Center.
021-571	**[Cause]** An error occurred in the 3G connection of 3Gnet-BOX. **[Remedy]** Switch off the machine power, make sure that the touch screen is blank, and then switch on the machine power. If the error still is not resolved, contact our Customer Support Center.
021-572	**[Cause]** An error occurred in the connection library in the 3G connection of 3Gnet-BOX. **[Remedy]** Switch off the machine power, make sure that the touch screen is blank, and then switch on the machine power. If the error still is not resolved, contact our Customer Support Center.
021-573	**[Cause]** An error occurred in 3Gnet-BOX. **[Remedy]** Switch off the machine power, make sure that the touch screen is blank, and then switch on the machine power. If the error still is not resolved, contact our Customer Support Center.
021-574	**[Cause]** An error was detected for the reset of 3Gnet-BOX and the reboot of this machine and connection is not started. **[Remedy]** Switch off the machine power, make sure that the touch screen is blank, and then switch on the machine power. If the error still is not resolved, contact our Customer Support Center.
021-575	**[Cause]** An error occurred in the 3G connection of 3Gnet-BOX. **[Remedy]** Switch off the machine power, make sure that the touch screen is blank, and then switch on the machine power. If the error still is not resolved, contact our Customer Support Center.
021-576	**[Cause]** An error occurred in the connection of DNS server in the 3G connection of 3Gnet-BOX. **[Remedy]** Switch off the machine power, make sure that the touch screen is blank, and then switch on the machine power. If the error still is not resolved, contact our Customer Support Center.
021-577	**[Cause]** Failure of the name resolution of EP server in the 3G connection of 3Gnet-BOX. **[Remedy]** Switch off the machine power, make sure that the touch screen is blank, and then switch on the machine power. If the error still is not resolved, contact our Customer Support Center.
021-578	**[Cause]** Failure of the name resolution of an EP client certificate issue in the 3G connection of 3Gnet-BOX. **[Remedy]** Switch off the machine power, make sure that the touch screen is blank, and then switch on the machine power. If the error still is not resolved, contact our Customer Support Center.
021-579	**[Cause]** Failure of the name resolution of an EP client certificate issue in the 3G connection of 3Gnet-BOX. **[Remedy]** Switch off the machine power, make sure that the touch screen is blank, and then switch on the machine power. If the error still is not resolved, contact our Customer Support Center.

Error Code	Cause and Remedy
021-580	**[Cause]** Connection failure was detected in the 3G connection of 3Gnet-BOX. **[Remedy]** Switch off the machine power, make sure that the touch screen is blank, and then switch on the machine power. If the error still is not resolved, contact our Customer Support Center.
021-581	**[Cause]** Failure of the name resolution of Remote Download server in the 3G connection of 3Gnet-BOX. **[Remedy]** Switch off the machine power, make sure that the touch screen is blank, and then switch on the machine power. If the error still is not resolved, contact our Customer Support Center.
021-582	**[Cause]** A conflict is detected between the software update and a batch data setting or acquisition. **[Remedy]** Close the [Maintenance] screen, wait until the batch data setting or acquisition is completed, and operate the software update again. If the same message is displayed again, contact our Customer Support Center.
021-700	**[Cause]** The USB cable is unplugged or the USB interface may be out of order. **[Remedy]** Confirm that the USB cable is connected and switch off the machine power, make sure that the touch screen is blank, and then switch on the machine power. If the error still is not resolved, contact our Customer Support Center.
021-701	**[Cause]** The USB interface error occurred. **[Remedy]** Retry after waiting for a while or confirm that the USB cable is connected and switch off the machine power, make sure that the touch screen is blank, and then switch on the machine power. If the error still is not resolved, contact our Customer Support Center.
021-731	**[Cause]** While using the related product, you attempted to make color copies when the use of color is restricted. **[Remedy]** Contact our Customer Support Center.
021-732	**[Cause]** The EP system is not available. **[Remedy]** Contact our Customer Support Center.
021-733	**[Cause]** The use of color is restricted or the number of color pages reached the maximum. **[Remedy]** Contact our Customer Support Center.
023-500	**[Cause]** An error occurred in the machine. **[Remedy]** Contact our Customer Support Center.

Error Code	Cause and Remedy
024-340 024-341 024-342 024-343 024-345 024-346 024-347 024-348 024-349 024-350 024-351 024-352 024-353 024-354 024-355 024-356 024-357 024-358 024-359 024-360 024-361 024-362 024-363 024-364 024-365 024-366 024-367 024-368 024-370 024-371 024-372 024-373 024-375 024-376	**[Cause]** An error occurred in the machine. **[Remedy]** Switch off the machine power, make sure that the touch screen is blank, and then switch on the machine power. If the same message is displayed again, contact our Customer Support Center.
024-700	**[Cause]** The memory capacity or hard disk required to use the optional feature is not installed. **[Remedy]** Switch off the machine power, and then switch it on again after the touch screen goes out. If the error still is not resolved, contact our Customer Support Center.
024-701	**[Cause]** The specified paper type is not compatible with the Face Up/ Down Output setting selected. **[Remedy]** Specify a paper type that is compatible with the Face Up/ Down setting.
024-702	**[Remedy]** Remove the jammed paper, and then try printing again.
024-703	**[Cause]** Unable to print because the number of booklet pages exceeds the maximum number allowed. **[Remedy]** Use paper of less weight. Or, cancel the booklet creation.

Error Code	Cause and Remedy
024-704	**[Cause]** An error occurred while receiving a print job from Denshi- Pen. **[Remedy]** Switch off the machine power, make sure that the touch screen is blank, and then switch on the machine power. If the same message is displayed again, contact our Customer Support Center.
024-705	**[Cause]** The template of the specified force annotation was not found in the machine. **[Remedy]** Delete the document in the folder of the machine, and then select [Store to Folder] again from the print driver to store the document.
024-706	**[Cause]** A print job from Denshi-Pen is sent when [Force Watermark - Client Print] or [Force Secure Watermark] > [Client Print] is set to [On]. **[Remedy]** Set [Allow User to Disable Active Settings] to [Disable Active Settings] under [Tools] >[Authentication / Security Settings].
024-742	**[Cause]** Booklet printing was specified for printer properties, but the number of print pages for the job exceeded the maximum number allowed for booklet creation. **[Remedy]** Change the printer properties setting to split the pages appropriately to create separate volumes, or to cancel the booklet creation setting.
024-746	**[Cause]** The specified paper type is not compatible with the specified paper size, paper tray, output tray, or 2 sided printing. **[Remedy]** Confirm the print data.
024-747	**[Cause]** Incompatible print parameters are used. The combination of the specified features such as Document Size, Paper Size, Paper Tray, 2 sided printing, and Output Tray is incompatible. **[Remedy]** Confirm the print data, and try printing again.
024-748	**[Cause]** The number of digits specified in [Bates Stamp - Number of Digits] screen does not match the value specified in [Starting Number]. **[Remedy]** Set [Bates Stamp - Number of Digits] to the value specified in [Starting Number] or to [Auto Assign].
024-775	**[Cause]** Booklet printing was specified for printer properties, but the number of print pages for the job exceeded the maximum number allowed for booklet creation. **[Remedy]** Change the printer properties setting to split the pages appropriately to create separate volumes, or to cancel the booklet creation setting.
025-596 025-597	**[Cause]** An error occurred with the hard disk. **[Remedy]** Replace the hard disk.
026-400	**[Cause]** More than two devices are connected to the USB host port. **[Remedy]** Disconnect the third or more devices so that the number of connected devices becomes two. If the error still is not resolved, switch off the machine power, make sure that the touch screen is blank, and then switch on the machine power.

Error Code	Cause and Remedy
026-700	**[Cause]** By Address Book operation, the machine received an unsupported protocol from the LDAP server. **[Remedy]** Execute the operation again. If the error still is not resolved, contact our Customer Support Center.
026-701	**[Cause]** The number of queries submitted to the Address Book exceeded the machine's processing capability. **[Remedy]** Wait for a while and execute the operation again. If the only one query is being submitted to the Address Book, the machine's software may be defective. Contact our Customer Support Center.
026-702	**[Cause]** The number of accesses from the LDAP server to the machine by Address Book operation exceeded the machine's processing capability. **[Remedy]** Wait for a while and execute the operation again. If the error still is not resolved, contact our Customer Support Center.
026-703	**[Cause]** Authentication is canceled when adding documents during faxing or scanning. **[Remedy]** Authenticate when adding documents.
026-704	**[Cause]** An error occurred during processing DocuWorks documents. **[Remedy]** Print using the print driver (PCL, etc.) from DocuWorks Viewer.
026-705	**[Cause]** Unable to process for DocuWorks documents because of insufficient memory space.
026-706	**[Cause]** Attempted to print a DocuWorks document of which printing is prohibited. **[Remedy]** Release the print prohibited settings using DocuWorks Viewer, and then execute the operation again.
026-707	**[Cause]** When processing password-protected DocuWorks documents, the password entered does not match that of the DocuWorks document. **[Remedy]** Set the correct password on ContentsBridge.
026-708	**[Cause]** Exceeded the maximum limit for the scan data size that can be stored for one job with Store & Send Link. **[Remedy]** Take one of the following measures: **1)** Reduce the resolution (scan quality) of the scan parameters and execute the operation again. **2)** Reduce the image with magnification of the scan parameters (such as A3 > A4) and then execute the operation again. **3)** If [Store & Send Link - Maximum File Size] is set to a small value, increase the value.
026-709	**[Cause]** The capacity of the hard disk that can be used to store scan data with Store & Send Link is insufficient. **[Remedy]** Wait around one day, and when capacity becomes available as a result of the automatic deletion of files, execute the operation again.

Error Code	Cause and Remedy
026-710	**[Cause]** The machine has received and e-mail encrypted by S/ MIME, but does not support the encryption method. **[Remedy]** Take one of the following measures: • Ask the sender to send the e-mail encrypted by 3DES. • Disable the FIPS140 validation mode of the machine.
026-711	**[Cause]** Exceeded the maximum size allowed for a multi-page file when scanning. **[Remedy]** Take one of the following measures: **1)** Reduce the resolution (scan quality) of the scan parameters and execute the operation again. **2)** Reduce the number of document pages and then execute the operation again. The maximum size is 2 GB for TIFF, XPS, and PDF, and 1 GB for XDW. **Note** • XPS stands for XML Paper Specification.
026-712	**[Cause]** An error occurred while operating from CentreWare Internet Services. **[Remedy]** Retry after waiting for a while.
026-718	**[Cause]** Incompatible print parameters are used. The combination of the specified features such as Document Size, Paper Size, Paper Tray, 2 sided printing, and Output Tray is incompatible. **[Remedy]** Confirm the print data, and try printing again.
026-719	**[Cause]** An error occurred while operating the Store to USB service. **[Remedy]** Wait for a while and execute the operation again. If the error still is not resolved, contact our Customer Support Center.
026-720	**[Cause]** The capacity of the USB memory device of the recipient is insufficient while performing the Store to USB service. **[Remedy]** Confirm the amount of available space.
026-721	**[Cause]** An error occurred while operating the Store to USB service. **[Remedy]** Check the following conditions: • The USB memory device is inserted into the USB memory slot. • The USB memory device is accessible from your computer. • The unencrypted USB memory device is used.
026-722	**[Cause]** The USB memory device is not initialized. **[Remedy]** Initialize the USB memory device on a computer with the following file format, and then execute the operation again. • Supported file formats: FAT12, FAT16 (FAT), FAT32 **Note** • NTFS is not supported. • A software-encrypted USB memory device is not supported. If the error still is not resolved, contact our Customer Support Center.

Error Code	Cause and Remedy
026-723	**[Cause]** The machine failed to access to the medium. **[Remedy]** **1)** Check that the medium is not inserted or removed, or the other medium is not inserted, while the machine is referencing the medium. **2)** Check that the file in the medium can be accessed via a computer.
026-724 026-725	**[Cause]** An error occurred while connecting to the EP system via the Internet. **[Remedy]** Contact our Customer Support Center.
026-726	**[Cause]** The machine configuration information at a print job specification does not match the actual machine configuration. **[Remedy]** Modify the machine configuration information in the print driver screen to match the actual machine configuration.
026-727	**[Cause]** Probable causes are as follows: **1)** Unusable characters are included in the path name of the file location. **2)** The length of the path name of the file location (including extension) exceeds the number of characters available. **[Remedy]** Take one of the following measures: **1)** Change the path name of the file location. **2)** Set the path in the range of 1 to 255 bytes.
026-728	**[Cause]** An error occurred during WSD communications. **[Remedy]** Check whether the network cable is correctly connected or check the amount of available memory of the destination device.
026-729	**[Cause]** Probable causes are as follows: **1)** An error occurred during WSD communications. **2)** Application other than [Windows Fax and Scan] was used to scan a document on the scanner (WSD). **[Remedy]** **1)** , check whether the network cable is correctly connected or check the amount of available memory of the destination device. **2)** ,Use [Windows Fax and Scan] to scan. If using another application, set the document on the document glass. **Note** • WSD stands for Web Services on Devices.
026-730	**[Cause]** The size of paper loaded in the specified tray is unknown. **[Remedy]** Check whether the paper guides are correctly positioned in the tray, and then try again.
026-736	**[Cause]** An internal error occurred while sending the scanned document to the HTTP server. **[Remedy]** Execute the operation again. If the error still is not resolved, contact our Customer Support Center.
026-737	**[Cause]** Unable to send the scanned document to the HTTP server because a network error occurred. **[Remedy]** Consult your network administrator whether the network or the server have any problem.

Error Code	Cause and Remedy
026-738	**[Cause]** The machine failed to send scanned document data to the HTTP server because Web application is closed during it. **[Remedy]** Execute the operation again.
026-739	**[Cause]** When authentication succeeds, all jobs are canceled because there is a pending job. **[Remedy]** No measure is required.
027-442	**[Cause]** The IP address of IPv6 already network exists. **[Remedy]** Change the [Auto Stateless Address 1] for IPv6 on the machine, or the IP address of IPv6 on the network device, to remove the duplication of addresses.
027-443	**[Cause]** The IP address of IPv6 already exists. **[Remedy]** Change the [Auto Stateless Address 2] for IPv6 on the machine, or the IP address of IPv6 on the network device, to remove the duplication of addresses.
027-444	**[Cause]** The IP address of IPv6 already exists. **[Remedy]** Change the [Auto Stateless Address 3] for IPv6 on the machine, or the IP address of IPv6 on the network device, to remove the duplication of addresses.
027-445	**[Cause]** IP address for IPv6 set manually is incorrect. **[Remedy]** Set the IP address correctly.
027-446	**[Cause]** The IP address of IPv6 set manually already exists. **[Remedy]** Change the [Manually Configured IPv6 Address] on the machine, or the IP address of IPv6 on the network device, to remove the duplication of addresses.
027-447	**[Cause]** The IP address of IPv6 already exists. **[Remedy]** Change the [Link-local Address] for IPv6 on the machine, or the IP address of IPv6 on the network device, to remove the duplication of addresses.
027-452	**[Cause]** IP address of IPv4 already exists. **[Remedy]** Change the IP address of IPv4 set on the machine or the IP address of IPv4 on the network device.
027-500	**[Cause]** Unable to connect to the SMTP server. **[Remedy]** Specify the SMTP server name correctly or specify the server by using its IP address.
027-501	**[Cause]** A POP server error occurred. **[Remedy]** Execute the operation again. If the error still is not resolved, contact our Customer Support Center.
027-502	**[Cause]** Failed to log into the POP3 server when using the POP3 protocol. **[Remedy]** Confirm whether the user name and password used in the POP3 server are correct on CentreWare Internet Services.
027-503	**[Cause]** A POP server error occurred. **[Remedy]** Execute the operation again. If the error still is not resolved, contact our Customer Support Center.

Error Code	Cause and Remedy
027-504	**[Cause]** An SMTP server error occurred. **[Remedy]** Execute the operation again. If the error still is not resolved, contact our Customer Support Center.
027-513	**[Cause]** The machine failed to transfer data using SMB of the Scan to PC service because access to the SMB server was not permitted. **[Remedy]** Consult your system administrator for settings.
027-514	**[Cause]** The machine failed to transfer data using SMB of the Scan to PC service because an error has been occurred between the SMB server and the DNS server. **[Remedy]** Check the following conditions: • The SMB server is connected to the DNS server. • The SMB server name is registered on the DNS server.
027-515	**[Cause]** The machine failed to transfer data using SMB of the Scan to PC service because an error has been occurred. **[Remedy]** Take the following measures: • Set the DNS server address. • Set the target SMB server address using IP address.

Error Code	Cause and Remedy
027-516	**[Cause]** Probable causes are as follows: **1)** The SMB server of the destination computer cannot be found while transferring data using SMB of the Scan to PC service (TCP/IP session establishment failed). **2)** The SMB server specified as the destination does not respond to the machine while transferring data using SMB of the Scan to PC service. **3)** Failed to name resolution of the SMB server specified as destination to transfer data using SMB of the Scan to PC service. **[Remedy] 1)** Take one of the following measures: • Confirm the connection of the network cable. • For communications over subnet, confirm the WINS server settings, and check whether the server address can be resolved correctly. • File Sharing service (communicating via port 137 (UDP), port 138 (UDP), and port 139 (TCP)) is authorized for the Firewall settings of the destination SMB server. **2)** Check whether the file sharing service is enabled on the destination SMB server. • The file sharing service of Microsoft network is enabled. If the error still is not resolved, check the following setting. • NetBIOS over TCP/IP for TCP/IP is activated. **3)** Take one of the following measures: • When the destination SMB server name is specified using the FQDN (example: mypc01.fuji0.co.jp), confirm that the DNS server address is set correctly in the Connectivity & Network Setup of the machine. • If the connection with the DNS server has any problem, check whether the destination server name set in the machine is registered on the DNS server.
027-518	**[Cause]** The machine failed to transfer data using SMB of the Scan to PC service because the specified password was incorrect. When the server is Macintosh, the specified user may not have been registered as a user who is permitted to use File Sharing. **[Remedy]** Confirm the password for the shared folder. When the server is Macintosh, specify a user who is permitted to use File Sharing.

Error Code	Cause and Remedy
027-519	**[Cause]** The machine failed to transfer data using SMB of the Scan to PC service because the save location or file name specified for the scanned image had a problem. • The save location or the file name has a problem. • The specified save location does not exist on the server. • Invalid characters are used in the save location or the file name. • Because the specified save location has the Distributed File System (DFS) settings, it is linked to another shared folder. **[Remedy]** Take one of the following measures: • Check whether the save location is correct • Check whether the specified file name can be used on the SMB server. • Confirm the Distributed File System (DFS) settings with your system administrator. To confirm the settings, execute the following procedures: **1)** Select [Start] > [Programs] > [Administrative Tools] > [Distributed File System] on the SMB server. **2)** Select the specified save location from the left side frame of the [Distributed File System] window, and then confirm the target information displayed on the right side frame of the window. **3)** Specify the SMB server, shared name, and save location based on the information you confirmed in step 2.
027-520	**[Cause]** The machine failed to transfer data using SMB of the Scan to PC service because the file name or folder name could not be retrieved. **[Remedy]** Confirm the access privilege to the SMB server.
027-521	**[Cause]** The machine failed to transfer data using SMB of the Scan to PC service because the suffix of the name of the file or folder exceeded the limit value. **[Remedy]** Change the file name or forwarding destination folder of the scan server. Or, try moving or deleting the files within the forwarding destination folder.
027-522	**[Cause]** During forwarding using SMB of the Scan to PC service, the scanned image file could not be created on the SMB server because of one of the following reasons: • The specified file name already exists. • The specified file name has already been used. • The specified file name exists as a directory. • Invalid characters are used in the file name. **[Remedy]** Take one of the following measures: • Check whether the specified file name can be used in the save location. • Check whether the specified file name has been used by another user. • Check whether the specified file name has been used for another file or folder.

Error Code	Cause and Remedy
027-523	**[Cause]** The machine failed to transfer data using SMB of the Scan to PC service because a folder could not be created on the SMB server. The specified folder already exists. **[Remedy]** Check whether the specified name is being used for another file or folder on the SMB server.
027-524	**[Cause]** The machine failed to transfer data using SMB of the Scan to PC service because a folder could not be created on the SMB server. The specified folder already exists. **[Remedy]** Check whether the specified name is being used for another file or folder on the SMB server.
027-525	**[Cause]** During forwarding using SMB of the Scan to PC service, a file could not be deleted from the SMB server because of one of the following reasons: • The file does not exist. • The file is opened. • The specified file name is being used as a directory. **[Remedy]** Check whether the file is not being used by another user at the specified save location.
027-526	**[Cause]** The machine failed to delete the lock directory on the SMB server while transferring data using SMB of the Scan to PC service. **[Remedy]** If the lock directory (*.LCK) exists in the destination, delete it manually, and then execute the operation again.
027-527	**[Cause]** During forwarding using SMB of the Scan to PC service, a folder could not be deleted from the SMB server because of one of the following reasons: • The file does not exist. • The directory is not empty. • The specified directory name does not exist. **[Remedy]** Check whether the file is not being used by another user at the specified save location.
027-528	**[Cause]** The machine failed to transfer data using SMB of the Scan to PC service because no space is available at the save location on the SMB server. **[Remedy]** Check whether the save location has free space.
027-529	**[Cause]** The machine failed to transfer data using SMB of the Scan to PC service because an unexpected error has been received from the SMB server, or an unexpected internal error has occurred on the machine. **[Remedy]** Log into the server from another computer using the same user name, to confirm whether a file can be written into the same save location on the server. If the error still is not resolved, it may be an internal error. Contact our Customer Support Center.
027-530	**[Cause]** There are duplicate file names. [Do Not Save] is set as a handling method when names are duplicated for scanned files. **[Remedy]** Set the process to be executed when in case of a file name duplication to other than [Do Not Save].

Error Code	Cause and Remedy
027-531	**[Cause]** Detected an incorrect filing policy (when add was selected) after connecting to the server. **[Remedy]** When [Rename New File] is set as the process to be executed in case of a file name duplication, confirm that the file format is not multi-page.
027-532	**[Cause]** Failed to access the NEXTNAME.DAT file. **[Remedy]** When [Rename New File] is set as the process to be executed in case of a file name duplication, check the NEXTNAME.DAT file is correct.
027-533	**[Cause]** An internal error occurred. **[Remedy]** Execute the operation again. If the error still is not resolved, contact our Customer Support Center.
027-543	**[Cause]** The SMB server (NetBIOS) name is invalid. **[Remedy]** Check whether the server name of the SMB server is correct.
027-547	**[Cause]** SMB protocol error. An invalid character was detected in the specified domain name. **[Remedy]** If the error occurred during SMB authentication: Consult your network administrator for the domain name, and then set it correctly. Also, check whether the domain name set on the machine is correct. To confirm the settings, execute the following procedures: **1)** Enter the System Administration mode, and select [Tools] > [System Settings] > [Connectivity & Network Setup] > [Remote Authentication/Directory Service] > [SMB Server Settings]. **2)** Select the SMB server to confirm the domain name. If the error occurred during transferring using SMB of the Scan to PC service: Consult your network administrator whether the domain name specified when entering login name is correct. To confirm the domain name on the server, execute the following procedures: **1)** Select [Start] > [Programs] > [Administrative Tools] > [Active Directory Domains and Trusts] on the Active Directory domain controller. **2)** From the left side frame of the [Active Directory Domains and Trusts] window, select [Active Directory Domains and Trusts] > [Domains]. Right-click [Domains] to select [Properties]. **3)** Select [General] tab in the domain properties window, and confirm the domain name (prior to Windows 2000).

Error Code	Cause and Remedy
027-548	**[Cause]** SMB protocol error. An invalid character has been detected in the specified user name. **[Remedy]** Ask your network administrator to set the user name with valid characters. To confirm the user name on the server, execute the following procedures: **1)** Select [Start] > [Programs] > [Administrative Tools] > [Active Directory Users and Computers] on the Active Directory domain controller where the user information is set. **2)** Select [Active Directory Users and Computers] > [Server] > [Domains] > [Users] from the left side frame of the [Active Directory Users and Computers] window, to display the user information. **3)** Right-click the target user from the right side frame of the [Active Directory Domains and Trusts] window to select [Properties]. **4)** Select the [Account] tab in the [User Properties] window, and confirm the user name of [User Log On Name (Prior to Windows 2000)].
027-549	**[Cause]** SMB protocol error **[Remedy]** Execute the operation again. If the error still is not resolved, contact our Customer Support Center.
027-564	**[Cause]** SMB protocol error. The SMB server was not found. **[Remedy]** Check whether the connection between the authentication server and the machine has been established via a network. For example, confirm the following conditions: • Network cable connection • TCP/IP settings • Connection via Port 137 (UDP), Port 138 (UDP), and Port 139 (TCP)
027-565	**[Cause]** SMB protocol error **[Remedy]** Execute the operation again. If the error still is not resolved, contact our Customer Support Center.
027-566	**[Cause]** SMB protocol error. SMB (TCP/IP) is not active. **[Remedy]** Enter the System Administration mode, and select [Tools] > [Connectivity & Network Setup] > [Port Settings].On this screen, confirm [SMB Client] is set to [Enabled].
027-569	**[Cause]** The SMB (TCP/IP) port is not activated. **[Remedy]** Enter the System Administration mode, and select [Tools] > [Connectivity & Network Setup] > [Port Settings].On this screen, confirm [SMB Client] is set to [Enabled].
027-572 **027-573** **027-574** **027-576** **027-578**	**[Cause]** SMB protocol error **[Remedy]** Execute the operation again. If the error still is not resolved, contact our Customer Support Center.

Error Code	Cause and Remedy
027-584	**[Cause]** SMB protocol error. The SMB server is in shared security mode. **[Remedy]** The SMB server may be set on Windows 95, Windows 98, or Windows Me OS. Set the SMB server on an OS other than Windows 95, Windows 98, or Windows Me OS.
027-585	**[Cause]** SMB protocol error. Login is disabled at this time. **[Remedy]** Confirm the period login permitted with your system administrator.
027-586	**[Cause]** SMB protocol error. The password has expired. **[Remedy]** Obtain a valid password from your system administrator.
027-587	**[Cause]** SMB protocol error. The password must be changed. **[Remedy]** Log into Windows, and change the password. Ask your system administrator to change the setting so that you do not need to change the login password next time.
027-588	**[Cause]** SMB protocol error. The user is invalid. **[Remedy]** Ask your system administrator to validate the user.
027-589	**[Cause]** SMB protocol error. The user was locked out. **[Remedy]** Ask your system administrator to cancel the lockout status.
027-590	**[Cause]** SMB protocol error. The user account has expired. **[Remedy]** Obtain a valid user account from your system administrator. Or, ask your system administrator to extend the account expiration date.
027-591	**[Cause]** SMB protocol error. Users are restricted. A blank password is invalid. **[Remedy]** Set the password for the user.
027-700	**[Cause]** The domain section of the recipient's e-mail address is a prohibited domain. **[Remedy]** Specify a domain that is not prohibited for the domain section of the recipient's e-mail address.
027-701	**[Cause]** The network cable is disconnected from the machine. **[Remedy]** Connect the network cable securely if the cable is disconnected.
027-702	**[Cause]** The specified recipient's certificate does not exist. **[Remedy]** Register the certificate for the recipient on the machine.
027-703	**[Cause]** The specified recipient's certificate has expired. **[Remedy]** Register a valid certificate for the recipient on the machine.
027-704	**[Cause]** The CA certificate of the specified recipient's certificate does not exist. **[Remedy]** Confirm the path to the recipient's certificate, and register the required CA certificate on the machine.
027-705	**[Cause]** The specified recipient's certificate has been revoked. **[Remedy]** Specify a valid certificate for the recipient.
027-706	**[Cause]** Unable to find the S/MIME certificate associated with the machine's e-mail address when sending e-mail. **[Remedy]** Import the S/MIME certificate corresponding to the mail address to the machine.

Error Code	Cause and Remedy
027-707	**[Cause]** The S/MIME certificate associated with the machine's e-mail address has expired when sending e-mail. **[Remedy]** Ask the sender to issue a new S/MIME certificate, and then import the certificate to the machine.
027-708	**[Cause]** The S/MIME certificate associated with the machine's e-mail address is not reliable when sending e-mail. **[Remedy]** Import a reliable S/MIME certificate to the machine.
027-709	**[Cause]** The S/MIME certificate associated with the machine's e-mail address has been discarded when sending e-mail. **[Remedy]** Import a new S/MIME certificate to the machine.
027-710	**[Cause]** No S/MIME certificate is attached to the received e-mail. **[Remedy]** Ask the sender to send the e-mail with an S/MIME certificate attached.
027-711	**[Cause]** No S/MIME certificate can be obtained from the received e-mail. **[Remedy]** Import the sender's S/MIME certificate to the machine, or ask the sender to send S/MIME signature mail with an S/ MIME certificate attached.
027-712	**[Cause]** The received S/MIME certificate has expired, or is an unreliable certificate. **[Remedy]** Ask the sender to send the e-mail with a valid S/MIME certificate attached.
027-713	**[Cause]** The received e-mail has been discarded because it may have been altered on its transmission route. **[Remedy]** Inform this error to the sender, and ask the sender to send the e-mail again.
027-714	**[Cause]** The received e-mail has been discarded because the address in its From field is different from the mail address in the S/MIME signature mail. **[Remedy]** Inform the sender that the mail addresses differ, and ask the sender to send the e-mail again.
027-715	**[Cause]** The received S/MIME certificate has not been registered on the machine, or has not been set for use on the machine. **[Remedy]** Import the sender's S/MIME certificate to the machine, or change settings to use the S/MIME certificate on the machine if the S/MIME certificate has already been registered.
027-716	**[Cause]** The received S/MIME certificate has been discarded because the certificate was unreliable. **[Remedy]** Ask the sender to send the e-mail with a reliable S/MIME certificate attached.
027-717	**[Cause]** Unable to obtain SMTP server address for e-mail transmissions from the DNS server. **[Remedy]** Check whether the DNS server is set correctly.

Error Code	Cause and Remedy
027-720	**[Cause]** Unable to find the server of an application interface destination. **[Remedy]** Confirm the DNS server address. Or, check whether the computer on which the application (ApeosWare Flow Service) is installed has been registered on the DNS server.
027-721	**[Cause]** An application interface destination does not exist. **[Remedy]** Check whether the application linked (ApeosWare Flow Service) is operating correctly.
027-722	**[Cause]** The jobs timed out during connection with an application interface destination. **[Remedy]** Try processing the job flow again.
027-723	**[Cause]** Authentication at the application interface destination (ApeosWare Flow Service) failed. **[Remedy]** Confirm the user name and password that is used when creating a job flow.
027-724	**[Cause]** An application interface destination (ApeosWare Flow Service) could not be accessed. **[Remedy]** Check whether ApeosWare Flow Service is operating correctly. If it is operating correctly, confirm the log.
027-725	**[Cause]** A job operation failed using an application interface. **[Remedy]** Check whether the application linked (ApeosWare Flow Service) is operating correctly. If it is operating correctly, confirm the log. If it is not operating, confirm the network environment.
027-726	**[Cause]** The status of the application interface destination (ApeosWare Flow Service) is unknown. **[Remedy]** Check whether ApeosWare Flow Service is operating correctly. If it is operating correctly, confirm the log.
027-727	**[Cause]** A parameter is illegal during an application interface. **[Remedy]** Try processing the job flow again.
027-728	**[Cause]** The number of files that are to be sent to external services exceeded the maximum number. **[Remedy]** Reduce the number of files, and send them again.
027-730	**[Cause]** The number of the document pages attached to the SMTP mail exceeds the maximum number of pages allowed for the Split Send feature. **[Remedy]** Increase the number of pages allowed for the Split Send feature, or reduce the number of the document pages.
027-731	**[Cause]** An error occurred in the machine. **[Remedy]** After the scanning for Network Scanning completes, execute the operation again.
027-732	**[Cause]** The Network Scanning server is full, or a server disk error occurred. **[Remedy]** Check the amount of available disk space. If the disk space is sufficient and the error still is not resolved, check the status of the disk of the server.

Error Code	Cause and Remedy
027-733	**[Cause]** The SSL setting on the Network Scanning server is disabled. **[Remedy]** Enable the SSL setting of the Network Scanning server.
027-734	**[Cause]** The certificate of the server used for Network Scanning is not set correctly. **[Remedy]** Check the followings: • The Network Scanning server is accessible from your computer using HTTPS protocol. • The SSL server certificate of the Network Scanning server is registered on the machine. • The SSL server certificate of the Network Scanning server is correct. • When the certificate is not registered on the Network Scanning server, disable the server certificate validation feature of the machine.
027-735	**[Cause]** The data transfer using SSL is specified, but the SSL setting of the machine is disabled. **[Remedy]** Enable the SSL setting, or specify HTTP for the transfer protocol.
027-736	**[Cause]** The server certificate verification feature of the machine is disabled when the server certificate verification is required. **[Remedy]** Enable the server certificate validation. Or, disable the server certificate validation for data transfer.
027-737	**[Cause]** An error occurred while reading data from the pool server for job templates. **[Remedy]** Check on the directory where the job templates are stored, and confirm whether the settings including the access privilege are correct.
027-739	**[Cause]** A specified pool server for job templates cannot be found. **[Remedy]** Confirm the path name of the pool server for job templates.
027-740	**[Cause]** Login to the pool server for job templates failed. **[Remedy]** Confirm whether the login user name and the login password are correct.
027-741	**[Cause]** Unable to connect to the pool server for job templates. **[Remedy]** Consult your network administrator for the network environment and the server configuration.
027-742	**[Cause]** The capacity of the hard disk is insufficient and job templates cannot be stored. **[Remedy]** Delete unnecessary data from the hard disk to free up disk space.
027-743	**[Cause]** The settings of the pool server for job templates are not correct. **[Remedy]** Confirm whether the settings of the pool server for job templates are correct.
027-744	**[Cause]** Problem with the domain name of the pool server for job templates. **[Remedy]** Confirm the DNS server connection and check whether the domain name is registered on the DNS server.

Error Code	Cause and Remedy
027-745	**[Cause]** DNS server address is not registered on the machine. **[Remedy]** Register the DNS server address on the machine or set the address of the pool server for job templates as IP address.
027-746	**[Cause]** The protocol setting of the pool server for job templates is not correct. **[Remedy]** Enable a proper port.
027-750	**[Cause]** Attempted to execute a fax, a print, or an Internet fax transmission to the scanned document. **[Remedy]** The Fax, Print, or Internet Fax features are unavailable for scanned documents. Set the job flow correctly.
027-751	**[Cause]** An error occurred during job flow processing. **[Remedy]** Confirm the settings of the job flow.
027-752	**[Cause]** A mandatory entry field is blank in the job flow. **[Remedy]** Take one of the following measures: • Do not link folders to job flows that have mandatory entry fields. • Set the default values to the mandatory fields of the job flow.
027-753	**[Remedy]** **1)** Attempted to execute the service while the port necessary for the job flow is either deactivated or disabled. **2)** Attempted to execute a job flow to send e-mail using the Encryption or Digital Signature feature while S/MIME communication is disabled.r. **[Remedy]** For 1), have your system administrator confirm the port status. For 2), enable S/MIME communication, or modify the job flow so that e-mail is sent by not using the Encryption or Digital Signature feature.
027-754	**[Cause]** [DocuWorks Signature] or [PDF Signature] is set inconsistency in the job flow. **[Remedy]** Check the DocuWorks and PDF signatures for both the system data settings (machine's current settings) and the executed job flow settings. If these settings differ, coordinate them.

Error Code	Cause and Remedy
027-757	**[Cause]** Probable causes are as follows: 1) An error occurred while connecting the server. 2) The reliable certificate has not been registered on the machine. 3) The server addresses of the SSL server and the destination server are not same. 4) The machine tries to communicate with the server using the encryption method which is not supported on the machine. 5) The SSL client certificate has not been registered on the machine. 6) The server certificate has been expired or will be expired soon. **[Remedy]** For 1), Check connection between the machine and the server, or the machine and the DNS server using ping or trace route. For 2), Import the CA certificate and intermediate certificate reliable to the SSL server to the machine. For 3), Check whether or not the machine communicates via the SSL proxy server which enables you to confirm the SSL communication. When the machine uses the server, set the machine not to use the SSL proxy server. For 4), Check the encryption method supported on the machine. Set the available encryption method to the SSL server setting. For 5), Import the SSL client certificate and configure the setting to use the certificate. For 6), Check the date and time registered on the machine is precise. If they are not, adjust the gap.
027-759	**[Cause]** The connection to the LDAP server referred by the LDAP server specified in [LDAP Server/Directory Service Settings] is failed. **[Remedy]** Make sure the network settings of the machine are correctly set. If the same message is displayed again, consult the network administrator and check the connection from the machine to the server.
027-760	**[Cause]** An invalid parameter is specified by XJT command. **[Remedy]** Confirm the specified parameter.
027-761	**[Cause]** An on-demand print job was sent to the machine using the Web Applications feature, but the time interval from receiving the print job until starting the print processing exceeded the time limit specified on the machine. **[Remedy]** When multiple documents are to be printed, reduce the number of documents, and then execute the operation again. When on-demand printing is executed using the Web Application feature, the print processing time is limited. Consequently if many documents are to be printed or if print processing takes time, a timeout may occur before all the data are received. To resolve this problem, change the time limit value according to the document volume and type. If the error still is not resolved, contact our Customer Support Center.

Error Code	Cause and Remedy
027-762	**[Cause]** An on-demand print job is sent to the machine using the Web Applications feature, however, the specified job ticket is invalid because of one of the following causes: • Abnormal change to the job ticket because of the machine software failure • Abnormal change to the job ticket because of a bug on the sender's remote server • Abnormal change to the job ticket because of network trouble • Intentional alteration to the job ticket **[Remedy]** Execute the print job again. If the error still is not resolved, contact our Customer Support Center.
027-763	**[Cause]** The machine failed to verify the user information against the remote accounting server. **[Remedy]** Take one of the following measures: • Check whether the remote accounting server is operating properly. • Check whether there is no network failure. • Connect the network cable securely. • Confirm the settings on the machine.
027-770	**[Cause]** The print job has a problem. **[Remedy]** Submit the print job again.
027-771	**[Cause]** The hard disk of the server connected to the machine is full. **[Remedy]** Delete unnecessary data from the server.
027-772	**[Cause]** An error occurred during communication with the SMTP server. **[Remedy]** Use ASCII characters to modify the host name that has been specified under [Tools] > [Connectivity & Network Setup] > [Machine's E-mail Address/Host Name]. If the error still is not resolved, confirm with your network administrator whether the SMTP server supports the HELO command.
027-773	**[Cause]** An error occurred during communication with the SMTP server. **[Remedy]** Wait for a while, and then execute the operation again.
027-774	**[Cause]** The specified e-mail address contains unsupported characters. **[Remedy]** Specify the e-mail address using only ASCII characters.
027-775	**[Cause]** Too many destination addresses have been specified. **[Remedy]** Reduce the number of destination addresses. If the error still is not resolved, confirm with your network administrator whether the SMTP server supports the EHLO command.
027-776	**[Cause]** An error occurred during communication with the SMTP server. **[Remedy]** Use ASCII characters to modify the host name that has been specified under [Tools] > [Connectivity & Network Setup] > [Machine's E-mail Address/Host Name]. If the error still is not resolved, confirm with your network administrator whether the SMTP server supports the EHLO command.
027-777	**[Cause]** The destination SMTP server does not support SMTP-AUTH. **[Remedy]** Set [E-mail Send Authentication] to [Off] under [Tools] > [Connectivity & Network Setup] > [Outgoing/Incoming E-mail Settings] > [SMTP Server Settings].

Error Code	Cause and Remedy
027-778	**[Cause]** The destination SMTP server does not support the SMTP-AUTH system set on the machine. **[Remedy]** Confirm the authentication type supported by the SMTP server with your network administrator. The machine supports the following authentication types: AUTH GSSAPI (only for Kerberos), AUTH NTLMv2, AUTH NTLMv1, AUTH PLAIN, AUTH LOGIN, AUTH CRAM-MD5.
027-779	**[Cause]** Failed to authenticate the SMTP server. **[Remedy]** Confirm the login name and password set to SMTP-AUTH.
027-796	**[Cause]** The received e-mail was discarded because no documents were attached to it. (The machine is set to print attached documents only.) **[Remedy]** To print the mail body or header information also, change settings in the [Properties] screen of CentreWare Internet Services. **Reference** • Refer to "Computer Operations" > "E-mail Printing" in the User Guide.
027-797	**[Cause]** The output destination of the received e-mail is invalid. **[Remedy]** Specify a correct output destination, and send the e-mail again.
027-798	**[Cause]** The specified document did not exist. **[Remedy]** Check the job flow setting.
029-703	**[Cause]** An error occurred in the communication with the AirPrint Scan client, or the client canceled the job. **[Remedy]** Check the network communication with the AirPrint Scan client by checking the following. • Check that the amount of space of the AirPrint Scan clien is enough. • Check the connection of the network cable.
033-310 033-311 033-312	**[Cause]** An error occurred. **[Remedy]** Switch off the machine power, make sure that the touch screen is blank, and then switch on the machine power. If the same message is displayed again, contact our Customer Support Center.
033-313	**[Cause]** A communication error occurred between the machine and the fax controller. **[Remedy]** Switch off the machine power, make sure that the touch screen is blank, and then switch on the machine power. If the same message is displayed again, contact our Customer Support Center.
033-314 033-315 033-316 033-317 033-318 033-319	**[Cause]** An error occurred. **[Remedy]** Switch off the machine power, make sure that the touch screen is blank, and then switch on the machine power. If the same message is displayed again, contact our Customer Support Center.

Error Code	Cause and Remedy
033-320 033-321 033-322 033-323	**[Cause]** An error occurred during fax transmission. **[Remedy]** Switch off the machine power, make sure that the touch screen is blank, and then switch on the machine power. If the same message is displayed again, contact our Customer Support Center.
033-324	**[Cause]** An error occurred. **[Remedy]** Switch off the machine power, make sure that the touch screen is blank, and then switch on the machine power. If the same message is displayed again, contact our Customer Support Center.
033-325	**[Cause]** An error occurred during fax transmission. **[Remedy]** Switch off the machine power, make sure that the touch screen is blank, and then switch on the machine power. If the same message is displayed again, contact our Customer Support Center.
033-326 033-327 033-328	**[Cause]** An error occurred. **[Remedy]** Switch off the machine power, make sure that the touch screen is blank, and then switch on the machine power. If the same message is displayed again, contact our Customer Support Center.
033-329	**[Cause]** An error occurred during fax transmission. **[Remedy]** Switch off the machine power, make sure that the touch screen is blank, and then switch on the machine power. If the same message is displayed again, contact our Customer Support Center.
033-330 033-331 033-332 033-333 033-334 033-335 033-336 033-338 033-339 033-340 033-363	**[Cause]** An error occurred. **[Remedy]** Switch off the machine power, make sure that the touch screen is blank, and then switch on the machine power. If the same message is displayed again, contact our Customer Support Center.
033-341	**[Cause]** An unsupported device is connected instead of Fax Kit 3. **[Remedy]** Contact our Customer Support Center.
033-500 033-501	**[Cause]** An error occurred during fax transmission. **[Remedy]** Confirm the recipient, and then execute the operation again. If receiving, ask the sender to send again.
033-502	**[Cause]** A response is not received for the fax. **[Remedy]** Confirm the recipient, and then execute the operation again. Also, confirm the recipient's machine (memory is full, machine is being maintained, or other conditions), and execute the operation again.
033-503 033-504	**[Cause]** An error occurred during fax transmission. **[Remedy]** Execute the operation again.

Error Code	Cause and Remedy
033-504	**[Cause]** An error occurred during fax transmission and the communication was terminated. **[Remedy]** If this error occurred when sending a fax, execute the operation again. If this error occurred when receiving a fax, ask the sender to send again.
033-505	**[Cause]** An error occurred during fax transmission. **[Remedy]** Confirm the recipient, and then execute the operation again. If receiving, ask the sender to send again.
033-506	**[Cause]** Communication was terminated at the recipient's machine. **[Remedy]** The job may have been canceled at the recipient. If the job was not canceled, check whether the other machine has a problem, and execute the operation again.
033-507	**[Cause]** The recipient's machine cannot receive. **[Remedy]** Confirm the recipient's machine (memory is full, machine is being maintained, or other conditions), and execute the operation again.
033-508	**[Cause]** No spooling documents exist at the other machine. **[Remedy]** Ask the other party to prepare polling documents, and execute the operation again.
033-509	**[Cause]** An error occurred during fax transmission. **[Remedy]** Execute the operation again. If the error still is not resolved, confirm the condition of the other machine.
033-510	**[Cause]** An error occurred during fax transmission. **[Remedy]** Confirm the condition of the line and the other machine, and execute the operation again.
033-511	**[Cause]** An error occurred during fax transmission. **[Remedy]** Confirm the following conditions: • Whether a polling document exists at the other machine • Whether a document is jammed at the other machine • Whether the passwords match
033-512	**[Cause]** The other party cannot execute Relay Broadcast. **[Remedy]** Confirm whether the other party can execute Relay Broadcast.
033-513	**[Cause]** The other machine does not have the Folder feature. **[Remedy]** Confirm whether the other machine has the Folder feature.
033-514	**[Cause]** An error occurred during fax transmission. **[Remedy]** Ask the sender to send again.
033-516	**[Cause]** An error occurred during fax transmission. **[Remedy]** Confirm the recipient, and then execute the operation again. If receiving, ask the sender to send again.
033-517	**[Cause]** An error occurred during fax transmission. **[Remedy]** Execute the operation again. If the error still is not resolved, confirm the condition of the other machine.
033-518	**[Cause]** The other machine cannot correspond to reception of SUB. **[Remedy]** Check whether the other machine can correspond to reception of SUB, and execute the operation again.

Error Code	Cause and Remedy
033-519	**[Cause]** The other machine cannot correspond to reception of SEP. **[Remedy]** Check whether the other machine can correspond to reception of SEP, and execute the operation again.
033-520	**[Cause]** The other machine cannot correspond to reception of PWD/SID. **[Remedy]** Check whether the other machine can correspond to reception of PWD/SID, and execute the operation again.
033-521	**[Cause]** An error occurred during fax transmission. **[Remedy]** Confirm the condition of the machine (memory is full, paper has run out, or other conditions), and execute the operation again.
033-522	**[Cause]** An error occurred during fax transmission. **[Remedy]** Ask the sender to execute the operation again.
033-523	**[Cause]** The line (Channel 1) is not connected correctly. **[Remedy]** Confirm the connection of the line (Channel 1) and connect it correctly, and then execute the operation again. When the machine is connected to other device such as a home gateway and a terminal adapter, confirm whether the device works properly.
033-524	**[Cause]** The line (Channel 2) is not connected correctly. **[Remedy]** Confirm the connection of the line (Channel 2) and connect it correctly, and then execute the operation again. When the machine is connected to other device such as a home gateway and a terminal adapter, confirm whether the device works properly.
033-525	**[Cause]** The line (Channel 3) is not connected correctly. **[Remedy]** Confirm the connection of the line (Channel 3) and connect it correctly, and then execute the operation again. When the machine is connected to other device such as a home gateway and a terminal adapter, confirm whether the device works properly.
033-526	**[Cause]** An error occurred during fax transmission. **[Remedy]** Confirm the model of the sender's machine, and then execute the operation again. If receiving, ask the sender to send again.
033-527	**[Cause]** An error occurred during fax transmission. **[Remedy]** Confirm the other machine has a problem, and then execute the operation again.
033-528	**[Cause]** An error occurred during fax transmission. **[Remedy]** Ask the sender to send again.
033-529	**[Cause]** An error occurred during fax transmission. **[Remedy]** Confirm the other machine has a problem, and then execute the operation again.
033-530	**[Cause]** Received a procedure disabled signal. **[Remedy]** Confirm the procedure for DTMF in the User Guide, and then execute the operation again.

Error Code	Cause and Remedy
033-531	**[Cause]** Received a command rejection signal **[Remedy]** Confirm the condition of the other machine (memory is full, paper has run out, or other conditions), and execute the operation again.
033-532 033-533	**[Cause]** An error occurred during fax transmission. **[Remedy]** Execute the operation again. If receiving, ask the sender to send again.
033-534	**[Cause]** The other machine does not offer a feature to print the number of document sets sent. **[Remedy]** Do not specify multiple sets.
033-535	**[Cause]** An error occurred during fax transmission. **[Remedy]** Confirm information such as the recipient and folder information, and execute the operation again.
033-536 033-537	**[Cause]** An error occurred during fax transmission. **[Remedy]** Execute the operation again.
033-538 033-539 033-540	**[Cause]** An error occurred during fax transmission. **[Remedy]** Execute the operation again. If the error still is not resolved, contact our Customer Support Center.
033-541	**[Cause]** The recipient is not specified. **[Remedy]** Specify the recipient correctly.
033-542	**[Cause]** A line was specified that is not connected. **[Remedy]** Specify a connected line.
033-543	**[Cause]** The recipient (fax number) is incorrect. **[Remedy]** Enter a correct fax number, and execute the operation again.
033-544	**[Cause]** The recipient's line is busy. **[Remedy]** Wait for a while, and then execute the operation again.
033-545	**[Cause]** There was no response from the fax recipient. **[Remedy]** Confirm that you specified the correct number, and execute the operation again. If the same message is displayed again, the recipient may not support fax, or the recipient machine may be powered off. Ask the recipient for details.
033-546	**[Cause]** A dial tone was not detected. **[Remedy]** Check whether the line is connected correctly.
033-547	**[Cause]** Communication was terminated by a cause such as pressing the <Stop> button. **[Remedy]** No measure is required.
033-548	**[Cause]** Cannot transmit manually because a line is unavailable. **[Remedy]** Establish communication such as by telephone, and execute the operation again.
033-549	**[Cause]** Cannot use the Fax service because of causes such as memory is insufficient. **[Remedy]** Wait for a while, and execute the operation again.

Error Code	Cause and Remedy
033-550	**[Cause]** Cannot execute another job because fax communication is in progress. **[Remedy]** Wait until the job being communicated completes, and then execute the operation again.
033-551	**[Cause]** You attempted to change a job immediately before fax or telephone communication completed. **[Remedy]** Wait for a while, and execute the operation again.
033-552	**[Cause]** The total quantity of error lines detected with G3 exceeded the set value. **[Remedy]** Confirm the model of the other machine, and execute the operation again. If receiving, ask the sender to send again.
033-553	**[Cause]** This machine does not have confidential or relay function. The F-code sent from the other machine contains an instruction for a function not supported by the machine. **[Remedy]** If necessary, check whether the sender entered an invalid F-code.
033-554	**[Cause]** The password was omitted or did not match in fax communication. **[Remedy]** No measure is required.
033-555	**[Cause]** The password received from the other machine did not match the password for receiving faxes on the machine. **[Remedy]** Check whether the sender specified an incorrect machine password.
033-556	**[Cause]** The password sent to the other machine did not match the password for receiving faxes on the other machine. **[Remedy]** If necessary, check whether the correct machine password has been instructed to the other machine.
033-557	**[Cause]** The number of services or of recipients exceeds the maximum limit. **[Remedy]** Wait until the number of jobs awaiting transmission decreases, or reduce the number of recipients, and then send again.
033-558	**[Cause]** The machine is set to reject faxes without a remote ID, and a remote ID was not sent from the other machine. **[Remedy]** Ask the sender to set a remote ID. If necessary, set the machine to receive even when a remote ID is not sent.
033-559	**[Cause]** The authentication ID is incorrect. **[Remedy]** An error occurred during operation of the maintenance system by Fuji Xerox. When the communication line is available, contact our Customer Support Center.
033-560 033-561 033-562	**[Cause]** An error occurred during remote maintenance work. **[Remedy]** This is an error occurring during remote maintenance work by Fuji Xerox. No measure is required.
033-563	**[Cause]** Paper that can print faxed documents is not loaded in a tray. **[Remedy]** Take one of the following measures: • Specify the paper size. • Confirm whether the paper tray is set correctly.

Error Code	Cause and Remedy
033-564	**[Cause]** The machine was turned off during communication. **[Remedy]** Wait for a while, confirm the fax service settings and the fax number, and then send again if sending. If the error still is not resolved, contact our Customer Support Center.
033-565	**[Cause]** Cannot send because too many recipients are specified. **[Remedy]** Wait until the number of jobs awaiting transmission decreases, or reduce the number of recipients, and then send again.
033-566	**[Cause]** Cannot send because the recipient (fax number) is not specified. **[Remedy]** Correctly specify the recipient's fax number.
033-567	**[Cause]** The recipient (fax number) is incorrect. **[Remedy]** Correctly enter the recipient's fax number, and execute the operation again.
033-568	**[Cause]** An error occurred during fax transmission. **[Remedy]** Execute the operation again. If receiving, ask the sender to send again. If the error still is not resolved, contact our Customer Support Center.
033-569	**[Cause]** Paper in the tray is not loaded in the direction that the received fax data can be printed. **[Remedy]** Load paper in Tray 5 according to the direction displayed on the screen.
033-570	**[Cause]** The machine was turned off during communication. **[Remedy]** Wait for a while, confirm the Fax service settings and the fax number, and then send again if sending. If the error still is not resolved, contact our Customer Support Center.
033-571	**[Cause]** The Fax service is not available from a reason such as insufficient memory. **[Remedy]** Cancel the fax data in the queue, or wait for a while, and execute the operation again.
033-572	**[Cause]** The data received is not printed. **[Remedy]** No measure is required. The data will be printed after a while.
033-573	**[Cause]** Attempted to send an IP fax (SIP) to the recipient (domain) that transmissions are not permitted. **[Remedy]** Take one of the following measures: • Confirm the recipient and re-specify a recipient. • Check the setting for Block Domains and re-specify a recipient.
033-574	**[Cause]** An unavailable line is specified. **[Remedy]** Specify an available line.
033-575	**[Cause]** An error occurred during fax transmission. **[Remedy]** Execute the operation again.
033-576	**[Cause]** The recipient (fax number) is incorrect. **[Remedy]** Enter a correct fax number, and execute the operation again.
033-577	**[Cause]** An error occurred during fax transmission. **[Remedy]** Execute the operation again.

Error Code	Cause and Remedy
033-578	**[Cause]** An error occurred during fax receiving. **[Remedy]** Confirm the status of the line and the recipient machine, and then ask the sender to send again.
033-580	**[Cause]** No VoIP gateway is registered corresponding to the fax number entered. **[Remedy]** Specify the VoIP gateway address corresponding to the fax number entered.
033-581	**[Cause]** Unable to connect to the SIP server because of an authentication error. **[Remedy]** Confirm the settings of login user name, login password, and SIP server under [SIP Settings] > [SIP Proxy Server Setup].
033-582	**[Cause]** An error occurred during IP fax (SIP) transmission. **[Remedy]** Check whether or not the recipient's machine supports IP fax (SIP). If it is IP fax-enabled device, confirm the settings on the SIP server.
033-583	**[Cause]** An error occurred during IP fax (SIP) transmission. **[Remedy]** Wait for a while, and execute the operation again.
033-584	**[Cause]** An error occurred during IP fax (SIP) transmission. **[Remedy]** Confirm the following conditions: • Whether the address or fax number entered is correct • Whether the network cable is connected • Whether the SIP server is enabled • Whether the network cable between the machine and the SIP server connected • Whether the network cable between the machine and the recipient connected • Whether the status of the SIP server and the recipient is available for communications
033-585	**[Cause]** An error occurred during IP fax (SIP) transmission. **[Remedy]** Contact our Customer Support Center.
033-586	**[Cause]** An error occurred during IP fax (SIP) transmission. **[Remedy]** Wait for a while, and execute the operation again. And confirm the following conditions: • Whether an IP address can be obtained • Whether the machine can register to the registrar server
033-587	**[Cause]** An error occurred during IP fax (SIP) transmission. **[Remedy]** Wait for a while, and execute the operation again. And confirm the following conditions: • Whether the network cable is connected • Whether the recipient machine is on
033-588	**[Cause]** An error occurred during IP fax (SIP) transmission. **[Remedy]** Execute the operation again. If another job is being processed, execute the operation again.

Error Code	Cause and Remedy
033-589	**[Cause]** An error occurred during IP fax (SIP) transmission. **[Remedy]** Check whether or not the recipient's machine supports IP fax (SIP). If it is IP fax-enabled device, contact our Customer Support Center.
033-590	**[Cause]** An error occurred during IP fax (SIP) transmission. **[Remedy]** Confirm the following conditions: • Whether the network cable is connected • Whether the recipient machine is on
033-591	**[Cause]** An error occurred during IP fax (SIP) transmission. **[Remedy]** Execute the operation again after another processing job finishes.
033-592	**[Cause]** An error occurred during IP fax (SIP) transmission. **[Remedy]** Confirm the following conditions: • Whether the network cable is connected • Whether the recipient machine is on
033-593	**[Cause]** An IP fax (SIP) was cancelled at the sender. **[Remedy]** Ask the sender to send again.
033-700	**[Cause]** The connection is time out when a fax is send or the machine receives a fax from a remote machine. **[Remedy]** In sending a fax, execute the operation again.In receiving a fax, the remote machine may cancel sending. Check the situation of the remote machine.
033-701	**[Cause]** The connection is time out. The possible causes are as follows. • The recipient is during a call. • The phone number is wrong. • The recipient is not a fax machine. • The line is not correctly connected. **[Remedy]** Confirm the following: • The recipient is not during a call. • The phone number is correct. • The recipient is a fax machine. • The line is correctly connected. When there is no problem, retry the operation.
033-710	**[Cause]** The document to be sent by polling was deleted. **[Remedy]** Store the document again.
033-712	**[Cause]** Unable to process because of insufficient memory. **[Remedy]** Delete unnecessary data.
033-713	**[Cause]** An error occurred during fax transmission. **[Remedy]** Contact our Customer Support Center.
033-716	**[Cause]** The folder specified from the sender's machine does not exist. **[Remedy]** Register the folder. **Reference** • Refer to "Create Folder" (P.276).

Error Code	Cause and Remedy
033-717	**[Cause]** The folder passcode specified from the sender's machine is incorrect. Or, the machine passcode for reception is incorrect. **[Remedy]** Inform the correct information to the sender's machine.
033-718	**[Cause]** Fax or polling documents do not exist in the folder specified from the sender's machine. **[Remedy]** Store fax or polling documents into the folder as necessary.
033-719	**[Cause]** The document may be deleted by turning the machine off and then on. **[Remedy]** Retry sending.
033-721	**[Cause]** An error occurred during fax transmission. **[Remedy]** Switch off the machine power, make sure that the touch screen is blank, and then switch on the machine power. If the error still is not resolved, contact our Customer Support Center.
033-724	**[Cause]** The reception was interrupted because the image volume exceeded the upper limit. **[Remedy]** Install the Extension System Memory to increase the maximum volume of image data.
033-725	**[Cause]** The hard disk is full. **[Remedy]** Delete unnecessary data from the hard disk to free up disk space.
033-726	**[Cause]** The received document was printed with 1 sided printing, because 2 sided printing is not available for mixed sized documents. **[Remedy]** No measure is required.
033-728	**[Cause]** The auto print formatting of the received fax document was interrupted by a manual print operation. **[Remedy]** No measure is required. The machine will automatically start the auto print job after manual printing completes.
033-731	**[Cause]** The printing of the received fax document was interrupted. **[Remedy]** The auto print processing of the received fax document was interrupted by a manual print operation. No measure is required.
033-732	**[Cause]** An error occurred while connecting to the EP system. **[Remedy]** This is an error occurring during maintenance work by Fuji Xerox. No measure is required.
033-733	**[Cause]** An error occurred during fax transmission. **[Remedy]** Switch off the machine power, make sure that the touch screen is blank, and then switch on the machine power. If the error still is not resolved, contact our Customer Support Center.
033-734	**[Cause]** Because a report job was instructed while preparing to print a received fax, the printing of the received fax is temporarily suspended. **[Remedy]** No measure is required.

Error Code	Cause and Remedy
033-735	**[Cause]** An error occurred during fax transmission. **[Remedy]** Switch off the machine power, make sure that the touch screen is blank, and then switch on the machine power. If the error still is not resolved, contact our Customer Support Center.
033-736	**[Cause]** The forwarding job was interrupted because the data volume exceeded the upper limit. **[Remedy]** No measure is required.
033-737	**[Cause]** An error occurred during fax transmission. **[Remedy]** Execute the operation again. If the error still is not resolved, contact our Customer Support Center.
033-738	**[Cause]** Received abnormal JBIG data. **[Remedy]** No measure is required.
033-740	**[Cause]** The printing of the received fax document was interrupted. **[Remedy]** No measure is required.
033-741	**[Cause]** An error occurred during fax transmission. **[Remedy]** Execute the operation again. If the error still is not resolved, contact our Customer Support Center.
033-742	**[Cause]** An error occurred during fax transmission. This error may occur if the remaining capacity of the machine's memory is 10% or less and Manual Send is used. **[Remedy]** If this error was caused when using Manual Send, connect the line after storing the document, and then send. If the error still is not resolved, delete unnecessary data from the hard disk to free up disk space, and execute the operation again. If the error persists, contact our Customer Support Center.
033-743 033-744 033-745 033-746	**[Cause]** An error occurred during fax transmission. **[Remedy]** Switch off the machine power, make sure that the touch screen is blank, and then switch on the machine power. Try again. If the error still is not resolved, contact our Customer Support Center.
033-747	**[Cause]** The job is temporarily suspended. **[Remedy]** No measure is required.
033-749	**[Cause]** The machine will automatically recover and print the document. **[Remedy]** No measure is required.
033-750	**[Cause]** An error occurred during fax transmission. **[Remedy]** Switch off the machine power, make sure that the touch screen is blank, and then switch on the machine power. Try again. If the error still is not resolved, contact our Customer Support Center.
033-751	**[Cause]** An activity report output occurred during the printer lockout duration. Outputting the activity report was suspended because the machine was in the Sleep mode. **[Remedy]** No measure is required because the machine will output the report after exiting the Sleep mode.

Error Code	Cause and Remedy
041-310	**[Cause]** An error occurred. **[Remedy]** Switch off the machine power, make sure that the touch screen is blank, and then switch on the machine power. If the same message is displayed again, contact our Customer Support Center.
041-333 041-334 041-335	**[Cause]** An error occurred in the machine. **[Remedy]** Switch off the machine power, make sure that the touch screen is blank, and then switch on the machine power. If the same message is displayed again, contact our Customer Support Center.
041-340 041-341	**[Cause]** An error occurred. **[Remedy]** Switch off the machine power, make sure that the touch screen is blank, and then switch on the machine power. If the same message is displayed again, contact our Customer Support Center.
041-388 041-391	**[Cause]** An error occurred in the machine. **[Remedy]** Switch off the machine power, make sure that the touch screen is blank, and then switch on the machine power. If the same message is displayed again, contact our Customer Support Center.
042-325 042-330	**[Cause]** An error occurred in the machine. **[Remedy]** Switch off the machine power, make sure that the touch screen is blank, and then switch on the machine power. If the error still is not resolved, contact our Customer Support Center.
043-342 043-343 043-344	**[Cause]** An error occurred in the machine. **[Remedy]** Switch off the machine power, make sure that the touch screen is blank, and then switch on the machine power. If the same message is displayed again, contact our Customer Support Center.
044-312 044-313 044-329	**[Cause]** An error occurred in the machine. **[Remedy]** Switch off the machine power, make sure that the touch screen is blank, and then switch on the machine power. If the error still is not resolved, contact our Customer Support Center.
045-310 045-311	**[Cause]** An error occurred. **[Remedy]** Switch off the machine power, make sure that the touch screen is blank, and then switch on the machine power. If the same message is displayed again, contact our Customer Support Center.
045-370 045-371	**[Cause]** An error occurred. **[Remedy]** Switch off the machine power, make sure that the touch screen is blank, and then switch on the machine power. If the same message is displayed again, contact our Customer Support Center.
045-382	**[Cause]** An error occurred in the machine. **[Remedy]** Switch off the machine power, make sure that the touch screen is blank, and then switch on the machine power. If the same message is displayed again, contact our Customer Support Center.

Error Code	Cause and Remedy
045-396	**[Cause]** An error occurred in the machine. **[Remedy]** Switch off the machine power, make sure that the touch screen is blank, and then switch on the machine power. If the same message is displayed again, contact our Customer Support Center.
045-398 045-399	**[Cause]** An error occurred in the machine. **[Remedy]** Switch off the machine power, make sure that the touch screen is blank, and then switch on the machine power. If the same message is displayed again, contact our Customer Support Center.
047-213	**[Cause]** Detected the installation of a finisher of a different type than expected. **[Remedy]** Switch off the machine power, make sure that the touch screen is blank, and then switch on the machine power. If the same message is displayed again, contact our Customer Support Center.
047-320	**[Cause]** An error occurred. **[Remedy]** Switch off the machine power, make sure that the touch screen is blank, and then switch on the machine power. If the same message is displayed again, contact our Customer Support Center.
057-310 057-311 057-312 057-313 057-314 057-315 057-316 057-317	**[Cause]** An error occurred in the machine. **[Remedy]** Switch off the machine power, make sure that the touch screen is blank, and then switch on the machine power. If the same message is displayed again, contact our Customer Support Center.
058-310 058-311	**[Cause]** An error occurred between the machine and the device connected. **[Remedy]** Switch off the machine power, make sure that the touch screen is blank, and then switch on the machine power. If the same message is displayed again, contact our Customer Support Center.
058-318 058-319 058-320 058-321	**[Cause]** An error occurred in the machine. **[Remedy]** Switch off the machine power, make sure that the touch screen is blank, and then switch on the machine power. If the same message is displayed again, contact our Customer Support Center.
059-326	**[Cause]** An error occurred in the machine. **[Remedy]** Switch off the machine power, make sure that the touch screen is blank, and then switch on the machine power. If the error still is not resolved, contact our Customer Support Center.
059-372	**[Cause]** An error occurred in the machine. **[Remedy]** Switch off the machine power, make sure that the touch screen is blank, and then switch on the machine power. If the same message is displayed again, contact our Customer Support Center.

Error Code	Cause and Remedy
059-383	**[Cause]** An error occurred in the machine. **[Remedy]** Switch off the machine power, make sure that the touch screen is blank, and then switch on the machine power. If the same message is displayed again, contact our Customer Support Center.
060-341 060-342 060-343 060-344 060-345 060-346 060-347	**[Cause]** An error occurred in the machine. **[Remedy]** Switch off the machine power, make sure that the touch screen is blank, and then switch on the machine power. If the same message is displayed again, contact our Customer Support Center.
060-348 060-349 060-350 060-351	**[Cause]** An error occurred in the machine. **[Remedy]** Switch off the machine power, make sure that the touch screen is blank, and then switch on the machine power. If the same message is displayed again, contact our Customer Support Center.
060-352 060-353 060-354 060-355	**[Cause]** An error occurred in the machine. **[Remedy]** Switch off the machine power, make sure that the touch screen is blank, and then switch on the machine power. If the same message is displayed again, contact our Customer Support Center.
060-356	**[Cause]** An error occurred in the machine. **[Remedy]** Switch off the machine power, make sure that the touch screen is blank, and then switch on the machine power. If the same message is displayed again, contact our Customer Support Center.

Error Code	Cause and Remedy
061-354 061-355 061-356 061-357 061-358 061-359 061-360 061-361 061-362 061-363 061-364 061-365 061-366 061-367 061-368 061-369 061-370 061-371 061-372 061-373 061-390 061-391 061-392 061-393	**[Cause]** An error occurred. **[Remedy]** Switch off the machine power, make sure that the touch screen is blank, and then switch on the machine power. If the same message is displayed again, contact our Customer Support Center.
062-277	**[Cause]** A communication error occurred between the document scanning unit and the document feeder. **[Remedy]** Contact our Customer Support Center.
062-311	**[Cause]** An error occurred. **[Remedy]** Switch off the machine power, make sure that the touch screen is blank, and then switch on the machine power. If the same message is displayed again, contact our Customer Support Center.
062-345 062-360 062-362 062-371 062-380 062-386 062-389 062-393	**[Cause]** An error occurred. **[Remedy]** Switch off the machine power, make sure that the touch screen is blank, and then switch on the machine power. If the same message is displayed again, contact our Customer Support Center.
062-790	**[Cause]** Copying of the scanned document is prohibited. **[Remedy]** Refer to "1 Before Using the Machine" > "Legal Notice" in the User Guide.
071-210	**[Cause]** Tray 1 malfunction **[Remedy]** Confirm the paper loading condition for the Tray, and then switch off the machine power, make sure that the touch screen is blank, and then switch on the machine power. If the error still is not resolved, contact our Customer Support Center. You can use a tray other than Tray 1.

Error Code	Cause and Remedy
071-212	**[Cause]** Tray 1 malfunction **[Remedy]** Execute the operation again.
072-210	**[Cause]** Tray 2 malfunction **[Remedy]** Confirm the paper loading condition for the Tray 2, and then switch off the machine power, make sure that the touch screen is blank, and then switch on the machine power. If the error still is not resolved, contact our Customer Support Center. You can use a tray other than Tray 2.
072-212	**[Cause]** Tray 2 malfunctioned **[Remedy]** Contact our Customer Support Center. You can use a tray other than Tray 2.
073-210	**[Cause]** Tray 3 malfunction **[Remedy]** Confirm the paper loading condition for the Tray, and then switch off the machine power, make sure that the touch screen is blank, and then switch on the machine power. If the error still is not resolved, contact our Customer Support Center. You can use a tray other than Tray 3.
073-212	**[Cause]** Tray 3 malfunction **[Remedy]** Contact our Customer Support Center. You can use a tray other than Tray 3.
074-210	**[Cause]** Tray 4 malfunction **[Remedy]** Confirm the paper loading condition for the Tray, and then switch off the machine power, make sure that the touch screen is blank, and then switch on the machine power. If the error still is not resolved, contact our Customer Support Center. You can use a tray other than Tray 4.
074-212	**[Cause]** Tray 4 malfunction **[Remedy]** Contact our Customer Support Center. You can use a tray other than Tray 4.
077-212	**[Cause]** Detected the installation of a tray of a different type than expected. **[Remedy]** Contact our Customer Support Center.
077-214 077-215	**[Cause]** Detected the installation of a tray of a different type than expected. **[Remedy]** Contact our Customer Support Center.
077-314 077-316	**[Cause]** An error occurred. **[Remedy]** Switch off the machine power, make sure that the touch screen is blank, and then switch on the machine power. If the same message is displayed again, contact our Customer Support Center.
081-799	**[Cause]** [Fax Transfer from Address Book] is set to [On], but the fax numebr of the forwarding destination is not registered in the Address Book. **[Remedy]** Register the fax number of the forwarding destination in the Address Book, or set [Fax Transfer from Address Book] to [Off].

Error Code	Cause and Remedy
091-328	**[Cause]** An error occurred in the drum cartridge. **[Remedy]** Reinstall the drum cartridge or replace the drum cartridge with a new one. If the error still is not resolved, contact our Customer Support Center.
091-329 091-330 091-331	**[Cause]** An error occurred in the machine. **[Remedy]** Switch off the machine power, make sure that the touch screen is blank, and then switch on the machine power. If the same message is displayed again, contact our Customer Support Center.
092-312 092-313 092-314 092-315 092-329 092-330 092-331	**[Cause]** An error occurred. **[Remedy]** Switch off the machine power, make sure that the touch screen is blank, and then switch on the machine power. If the same message is displayed again, contact our Customer Support Center.
092-332	**[Cause]** An error occurred in the machine. **[Remedy]** Switch off the machine power, make sure that the touch screen is blank, and then switch on the machine power. If the same message is displayed again, contact our Customer Support Center.
093-335	**[Cause]** An error occurred in the toner cartridge. **[Remedy]** Reinstall the toner cartridge or replace the toner cartridge with a new one. If the error still is not resolved, contact our Customer Support Center.
093-336 093-337 093-338	**[Cause]** An error occurred in the machine. **[Remedy]** Switch off the machine power, make sure that the touch screen is blank, and then switch on the machine power. If the same message is displayed again, contact our Customer Support Center.
099-364	**[Cause]** An error occurred in the machine. **[Remedy]** Switch off the machine power, make sure that the touch screen is blank, and then switch on the machine power. If the error still is not resolved, contact our Customer Support Center.
099-396 099-397	**[Cause]** An error occurred in the machine. **[Remedy]** Switch off the machine power, make sure that the touch screen is blank, and then switch on the machine power. If the same message is displayed again, contact our Customer Support Center.
099-398 099-399	**[Cause]** An error occurred between the machine and the device connected. **[Remedy]** Switch off the machine power, make sure that the touch screen is blank, and then switch on the machine power. If the same message is displayed again, contact our Customer Support Center.

Error Code	Cause and Remedy
102-356	**[Cause]** An error occurred. **[Remedy]** Switch off the machine power, make sure that the touch screen is blank, and then switch on the machine power. If the same message is displayed again, contact our Customer Support Center.
103-310 103-311 103-312 103-313 103-314	**[Cause]** An error occurred. **[Remedy]** Switch off the machine power, make sure that the touch screen is blank, and then switch on the machine power. If the same message is displayed again, contact our Customer Support Center.
112-700	**[Cause]** The finisher's hole punch waste container is full. **[Remedy]** Empty the hole punch waste container. **Reference** • For more information on how to empty the hole punch waste container, refer to "Emptying Punch Waste Container (for Finisher-B1)" (P.93).
116-210 116-211 116-212	**[Cause]** An error occurred in the USB memory device. **[Remedy]** Switch off the machine power, make sure that the touch screen is blank, and then switch on the machine power. If the error still is not resolved, contact our Customer Support Center.
116-220	**[Cause]** Failed to enter the Download mode. **[Remedy]** Contact our Customer Support Center.
116-310 116-311 116-312 116-313 116-314 116-319 116-321 116-322 116-323	**[Cause]** An error occurred in the machine. **[Remedy]** Switch off the machine power, make sure that the touch screen is blank, and then switch on the machine power. If the same message is displayed again, contact our Customer Support Center.
116-324	**[Cause]** An error occurred in the machine. **[Remedy]** If an error occurred while printing, turn off the machine once, then turn the machine on holding down both the <Start> and <Stop> buttons simultaneously for six seconds. This deletes the print data that caused the error. If the error was caused by another reason, switch off the machine power, make sure that the touch screen is blank, and then switch on the machine power. If the error still is not resolved, contact our Customer Support Center.

Error Code	Cause and Remedy
116-325 116-328 116-329 116-330 116-331 116-333 116-334 116-336 116-337 116-338	**[Cause]** An error occurred. **[Remedy]** Switch off the machine power, make sure that the touch screen is blank, and then switch on the machine power. If the same message is displayed again, contact our Customer Support Center.
116-339	**[Cause]** Job Based Accounting system started with no hard disk installed. **[Remedy]** To use the Job Based Accounting system, the hard disk is required. Switch off the machine power, make sure that the touch screen is blank, and then switch on the machine power to reset the operation.
116-340 116-341	**[Cause]** An error occurred. **[Remedy]** Switch off the machine power, make sure that the touch screen is blank, and then switch on the machine power. If the same message is displayed again, contact our Customer Support Center.
116-342	**[Cause]** An error occurred. **[Remedy]** Contact our Customer Support Center.

Error Code	Cause and Remedy
116-343 116-345 116-346 116-347 116-348 116-349 116-350 116-351 116-352 116-353 116-354 116-355 116-356 116-357 116-358 116-359 116-360 116-361 116-362 116-363 116-364 116-365 116-366 116-367 116-368 116-370 116-371 116-372 116-373 116-374 116-375 116-376 116-377 116-378 116-379 116-380 116-381 116-382 116-383 116-384 116-385	**[Cause]** An error occurred. **[Remedy]** Switch off the machine power, make sure that the touch screen is blank, and then switch on the machine power. If the same message is displayed again, contact our Customer Support Center.
116-386	**[Cause]** The fax cable is not connected correctly. **[Remedy]** Connect the cable securely, and then switch off the machine power, make sure that the touch screen is blank, and then switch on the machine power. If the error still is not resolved, contact our Customer Support Center.

Error Code	Cause and Remedy
116-387	**[Cause]** An error occurred in the machine. **[Remedy]** Switch off the machine power, make sure that the touch screen is blank, and then switch on the machine power. If the same message is displayed again, contact our Customer Support Center.
116-388	**[Cause]** The optional hard disk is not installed. **[Remedy]** Install the hard disk. Contact our Customer Support Center.
116-389	**[Cause]** The Extension System Memory is not installed. **[Remedy]** Install the Extension System Memory. Contact our Customer Support Center.
116-390	**[Cause]** An error occurred in the machine. **[Remedy]** Follow the message displayed on the touch screen and initialize the memory of the machine.
116-391 **116-392** **116-393** **116-394** **116-395** **116-396** **116-397** **116-399**	**[Cause]** An error occurred in the machine. **[Remedy]** Switch off the machine power, make sure that the touch screen is blank, and then switch on the machine power. If the same message is displayed again, contact our Customer Support Center.
116-701	**[Cause]** Unable to use the 2 Sided Printing feature because of insufficient memory.
116-702	**[Cause]** A print job was processed using a substitute font. **[Remedy]** Check the print data.
116-703	**[Cause]** Probable causes are as follows: **1)** An error occurred during PostScript (optional) processing. **2)** An error occurred because of insufficient memory. **3)** An error occurred because of insufficient memory for PostScript processing. **[Remedy]** For 1), check the print data. For 2), increase memory. For 3), increase the value for [PostScript Memory].
116-704	**[Cause]** An error occurred when reading data on the media. **[Remedy]** Check whether the media is inserted correctly.
116-705 **116-706** **116-707** **116-708** **116-709**	**[Cause]** An error occurred when reading data on the media. **[Remedy]** Use a computer to confirm the content recorded on the media.
116-710	**[Cause]** The correct document size could not be judged because the receive data exceeded the HP-GL/2 spool size. **[Remedy]** Increase the size assigned to HP-GL/2 auto layout memory.

Error Code	Cause and Remedy
116-713	**[Cause]** The data has been divided into a number of jobs because of insufficient disk space. **[Remedy]** Delete unnecessary data from the hard disk to free up disk space.
116-714	**[Cause]** An HP-GL/2 command error occurred. **[Remedy]** Check the print data.
116-716 116-717	**[Cause]** An error occurred when reading the data on the media. **[Remedy]** On a computer, confirm the content recorded on the media.
116-720	**[Cause]** An error occurred during print processing because of insufficient memory. **[Remedy]** Stop unnecessary ports or delete unnecessary data to free up disk space.
116-725	**[Cause]** Failed to write the image log because the image log storage area on the machine is insufficient. **[Remedy]** Execute the operation again. If this error still is not resolved, take one of the following measures: • Delete unnecessary image logs. • Change the [Assurance Level] setting for image logs to [Low]. In this case, selecting [Low] does not secure the contents of created image logs.
116-738	**[Cause]** The size and orientation of the form specified are not matched with the paper to be printed. **[Remedy]** Match the size and orientation of the paper with the form specified, and print again.
116-739	**[Cause]** The form or logo data cannot be registered because memory for the form and logo data or memory capacity for the hard disk is insufficient. **[Remedy]** Delete unnecessary data, or free up the space for the form memory.
116-740	**[Cause]** A numerical value operation error occurred because a value exceeding the value limit of the machine was used in the print data. **[Remedy]** Check the print data.
116-741	**[Cause]** The form cannot be registered because the number of the form registration exceeds the maximum number allowed. **[Remedy]** Delete unnecessary form. The maximum number allowed is 2048.
116-742	**[Cause]** The logo data cannot be registered because the number of the logo data registration exceeds the maximum number allowed. **[Remedy]** Delete unnecessary logo data.
116-743	**[Cause]** The logo data or form cannot be registered because the memory for the form and logo data is insufficient. **[Remedy]** Increase memory.
116-746	**[Cause]** The form specified is not registered. **[Remedy]** Use the form registered, or register the form.

Error Code	Cause and Remedy
116-747	**[Cause]** The paper margin value is too large for the HP-GL/2 active coordinates area. **[Remedy]** Decrease the paper margin value, and then execute the operation again.
116-748	**[Cause]** There is no plot data in the HP-GL/2 print data. **[Remedy]** Check the print data.
116-749	**[Cause]** The job was cancelled because the specified font does not exist. **[Remedy]** Install the font, or set the print driver to replace the font.
116-750	**[Cause]** Banner sheet tray malfunction **[Remedy]** Restore the tray to normal condition or change the Banner sheet tray.
116-751	**[Cause]** The process has been canceled because the hard disk is full. **[Remedy]** Delete stored data in the hard disk. If the error still is not resolved, split the file and send the job again.
116-752	**[Cause]** The descriptions of the PDF or XPS printing job ticket have a problem. **[Remedy]** Execute the operation again. If the error still is not resolved, contact our Customer Support Center. **Note** • XPS stands for XML Paper Specification.
116-771 **116-772** **116-773** **116-774** **116-775** **116-776** **116-777** **116-778**	**[Cause]** The data was automatically modified because it included an invalid parameter. **[Remedy]** The printed image may be incomplete. Confirm with the sender whether the image has a problem, or ask the sender to send the data again. When using the Internet Fax Forwarding feature, confirm its condition with the e-mail recipient.
116-780	**[Cause]** There is a problem with the document attached to the received e-mail. **[Remedy]** Check the attached document.
116-790	**[Cause]** Probable causes are as follows: **1)** If the operator cancelled printing a document that was received using the Store Fax - Local Folder or Store Internet Fax - Local Folder feature: The first set of the document is not stapled. **2)** For causes other than 1) No set of the document is stapled. **[Remedy]** For 1), manually staple the first set of the document. Or, do not cancel printing of a document that is received using the Store Fax - Local Folder or Store Internet Fax - Local Folder feature. For 2), check whether the staple position has been correctly specified, and try printing again.
117-310	**[Cause]** An error occurred while scanning a document via WSD. **[Remedy]** Switch off the machine power, make sure that the touch screen is blank, and then switch on the machine power. Execute the same operation again.

Error Code	Cause and Remedy
117-311	**[Cause]** Data Security Kit is not attached correctly. **[Remedy]** Insert Data Security Kit into the correct slot.
117-312	**[Cause]** An error occurred in the machine. **[Remedy]** Contact our Customer Support Center.
117-319 117-320 117-321 117-322 117-323 117-324	**[Cause]** An error occurred in the machine. **[Remedy]** Switch off the machine power, make sure that the touch screen is blank, and then switch on the machine power. If the same message is displayed again, contact our Customer Support Center.
117-326 117-327	**[Cause]** An error occurred in the machine. **[Remedy]** Switch off the machine power, make sure that the touch screen is blank, and then switch on the machine power. If the same message is displayed again, contact our Customer Support Center.
117-329 117-331 117-332 117-333	**[Cause]** An error occurred in the machine. **[Remedy]** Switch off the machine power, make sure that the touch screen is blank, and then switch on the machine power. If the same message is displayed again, contact our Customer Support Center.
117-343	**[Cause]** Probable causes are follows. **1)** When [Image Log Control] on Tools is invaled and [Enabled] is set for [Log Transfer] under [Transfer Image Log] , [Transfer Per Job Basis] is set for [Logs to Transfer]. **2)** When [Transfer Image Log] is invalid (the hard disk is not installed), [Log Transfer] is set to [Enabled]. **[Remedy]** For 1), set other than [Transfer Per Job Basis] for [Log to Transfer]. For 2), install the hard disk to tha machine, or set [Pause] for [Logs To Transfer].
117-345	**[Cause]** An error occurred between the machine and the device connected. **[Remedy]** Switch on the machine power without connecting the device for EP system, and then set [Login Type] to any option other than [Login to Remote Accounts] under [Tools] > [Authentication/ Security Settings] > [Authentication].
117-347	**[Cause]** The life of the component which cannot be replaced is expired. The machine itself needs to be replaced. **[Remedy]** Contact our Customer Support Center.
117-348 117-350	**[Cause]** The unformatted SD card used in the other machine is installed. **[Remedy]** Switch off the machine power, make sure that the touch screen is blank, and then switch on the machine power. If the same message is displayed again, contact our Customer Support Center.

Error Code	Cause and Remedy
118-310	**[Cause]** An error occurred in the machine. **[Remedy]** Switch off the machine power, make sure that the touch screen is blank, and then switch on the machine power. If the same message is displayed again, contact our Customer Support Center.
118-311	**[Cause]** An error occurred during software processing. **[Remedy]** Switch off the machine power, make sure that the touch screen is blank, and then switch on the machine power. If the same message is displayed again, contact our Customer Support Center.
121-310	**[Cause]** An error occurred in the machine. **[Remedy]** Switch off the machine power, make sure that the touch screen is blank, and then switch on the machine power. If the same message is displayed again, contact our Customer Support Center.
121-311	**[Cause]** An error occurred between the machine and the device connected. **[Remedy]** Once IC Card Reader (optional) is connected to the machine, the machine automatically changes the [Passcode Entry for Smart Card Login] setting to [On] under [Tools] > [Authentication/Security Settings] > [Authentication] > [Passcode Policy]. Change the setting as required.
121-312	**[Cause]** An error occurred between the machine and the device connected. **[Remedy]** Switch on the machine power without connecting the device for EP system, and then set [Login Type] to any option other than [Login to Remote Accounts] under [Tools] > [Authentication/ Security Settings] > [Authentication].
121-313	**[Cause]** An error occurred between the machine and the device connected. **[Remedy]** Switch on the machine power without connecting the device for EP system, and then set [Login Type] to any option other than [Login to Remote Accounts] under [Tools] > [Authentication/ Security Settings] > [Authentication].
121-314 121-316 121-317 121-318 121-319 121-322 121-323 121-324	**[Cause]** An error occurred between the machine and the device connected. **[Remedy]** Switch off the machine power, make sure that the touch screen is blank, and then switch on the machine power. If the same message is displayed again, contact our Customer Support Center.

Error Code	Cause and Remedy
121-325	**[Cause]** The machine detects unacceptable combination. The unacceptable combination are as follows: • Both the USB IC card reader and the EP related equipment are used • [Login to Local Accounts] is set to [Login Type] • [Smart Card or Control Panel Login] is set to [When Smart Card Reader is Connected] **[Remedy]** Take one of the following measures: • When both Smart Card and Control Panel Login are not used, the setting of [When Smart Card Reader is Connected] will be automatically changed to [Smart Card Login]. No measure is required. • When only the USB IC card reader is connected to the machine and both Smart Card and Control Panel Login are used, contact our Customer Support Center.
121-326	**[Cause]** An error occurred in the machine. **[Remedy]** Switch off the machine power, make sure that the touch screen is blank, and then switch on the machine power. If the same message is displayed again, contact our Customer Support Center.
121-327	**[Cause]** The machine does not support the connected product. **[Remedy]** Switch off the machine power, make sure that the touch screen is blank, and then switch on the machine power. If the same message is displayed again, contact our Customer Support Center.
121-339	**[Cause]** An error occurred between the machine and the device connected. **[Remedy]** Check the unit table for CoinKit. If an undefined item is included in the table, correct the table. Switch off the machine power, make sure that the touch screen is blank, and then switch on the machine power. If the error still is not resolved, contact our Customer Support Center.
121-340 121-350	**[Cause]** An error occurred between the machine and the device connected. **[Remedy]** Switch off the machine power, make sure that the touch screen is blank, and then switch on the machine power. If the same message is displayed again, contact our Customer Support Center.

Error Code	Cause and Remedy
123-310 123-311 123-312 123-325 123-326 123-333 123-343 123-344 123-350 123-352 123-353 123-354 123-355 123-356 123-357 123-358 123-362 123-368 123-369 123-371 123-374 123-377 123-379 123-380 123-381 123-382 123-383 123-384 123-389 123-390 123-392 123-393 123-395 123-396 123-397 123-398 123-399	**[Cause]** An error occurred in the machine. **[Remedy]** Switch off the machine power, make sure that the touch screen is blank, and then switch on the machine power. If the same message is displayed again, contact our Customer Support Center.

Error Code	Cause and Remedy
124-310 124-311 124-312 124-313 124-314 124-315 124-316 124-317 124-318 124-319 124-320 124-321 124-322 124-323 124-324 124-325 124-326 124-327 124-328 124-330 124-331 124-332 124-333 124-334 124-335 124-337 124-338 124-339 124-340 124-341 124-342 124-343 124-344 124-345 124-346 124-347 124-348 124-349 124-350 124-351 124-352 124-353	**[Cause]** An error occurred in the machine. **[Remedy]** Switch off the machine power, make sure that the touch screen is blank, and then switch on the machine power. If the same message is displayed again, contact our Customer Support Center.
124-354 124-355	**[Cause]** An error occurred in the machine. **[Remedy]** Switch off the machine power, make sure that the touch screen is blank, and then switch on the machine power. If the error still is not resolved, contact our Customer Support Center.

Error Code	Cause and Remedy
124-360 124-361 124-362 124-363 124-372 124-373 124-374	**[Cause]** An error occurred in the machine. **[Remedy]** Switch off the machine power, make sure that the touch screen is blank, and then switch on the machine power. If the same message is displayed again, contact our Customer Support Center.
124-380 124-381 124-382 124-383 124-390 124-391 124-392 124-393	**[Cause]** An error occurred in the machine. **[Remedy]** Switch off the machine power, make sure that the touch screen is blank, and then switch on the machine power. If the same message is displayed again, contact our Customer Support Center.
124-701	**[Remedy]** Contact our Customer Support Center. You can use any output trays other than the defective output tray.
124-702	**[Cause]** The output destination was changed because of the malfunction of the specified output tray (Finisher Tray). **[Remedy]** Contact our Customer Support Center. You can use any output trays other than the defective output tray.
124-705	**[Cause]** The punch setting was cancelled. **[Remedy]** Confirm the punch position, and then execute the operation again.
124-706	**[Cause]** The folding setting was cancelled. **[Remedy]** Confirm the folding setting, and then execute the operation again.
124-708	**[Remedy]** For 1), check whether the specified size paper is loaded in the tray. For 2), confirm whether the error code 012-231, 012-232, 012-233, or 012-234 is displayed on the touch screen, and contact our Customer Support Center.
124-709	**[Cause]** The document exceeded the maximum number of pages that can be stapled. **[Remedy]** Reduce the number of pages, or cancel the stapling setting, then try printing again.
124-710	**[Cause]** The machine cannot output to the output destination specified. A paper size or a paper type that cannot be output is specified or the output destination fails. **[Remedy]** No measure is required. The machine automatically selects the available output destination. If the paper is not still output from the specified output destination even after the correct paper size and type is selected, contact our Customer Support Center.
125-311	**[Cause]** An error occurred in the machine. **[Remedy]** Switch off the machine power, make sure that the touch screen is blank, and then switch on the machine power. If the same message is displayed again, contact our Customer Support Center.

Error Code	Cause and Remedy
127-310 127-311 127-312 127-313 127-314 127-315 127-320 127-337 127-342 127-353 127-354 127-396 127-398 127-399	**[Cause]** An error occurred in the machine. **[Remedy]** Switch off the machine power, make sure that the touch screen is blank, and then switch on the machine power. If same message is displayed again, contact our Customer Support Center.
127-700	**[Cause]** The SIP registrar server cannot be used. **[Remedy]** Check if the SIP registrar server is available. Also, confirm that [SIP Registrar Server Setup] is set correctly under [Tools] > [System Settings] > [Connectivity & Network Setup] > [SIP Settings] > [SIP Registrar Server Setup].
133-210 133-211 133-212 133-213 133-214 133-215 133-216 133-217 133-218 133-219 133-220 133-221 133-222 133-223 133-224	**[Cause]** An error occurred during fax transmission. **[Remedy]** Switch off the machine power, make sure that the touch screen is blank, and then switch on the machine power. If the error still is not resolved, contact our Customer Support Center.
133-226	**[Cause]** A country code not supported by the machine was specified. **[Remedy]** Contact our Customer Support Center.
133-280 133-281 133-282 133-283	**[Cause]** An error occurred during fax transmission. **[Remedy]** Switch off the machine power, make sure that the touch screen is blank, and then switch on the machine power. If the error still is not resolved, contact our Customer Support Center.
133-700	**[Cause]** The staple/hole punch setting was cancelled. **[Remedy]** Check whether the staple/hole punch position is correct, and then execute the operation again.

Error Code	Cause and Remedy
133-701	**[Cause]** Unavailable characters are included in Name, Company Logo, Fax Comment, or Local Name and the characters are converted. **[Remedy]** Enter available characters to Name, Company Logo, Fax Comment, or Local Name. When the available characters are not clear, enter alphanumeric characters only.
133-710	**[Cause]** When printing the received fax document, the paper loaded on the bypass tray was used for printing because the specified tray could not be used. **[Remedy]** Take one of the following measures: • Load paper available for printing the received fax document: A3SEF, A4LEF, B4SEF, B5LEF, A4SEF, A5SEF, B5SEF, 8.5 X11"SEF, 8.5 X 13"SEF, 8.5 X 14"SEF, 11 X 17"SEF, 8.5X 11"LEF, 5.5 X 8.5"SEF. • Use a paper type available for printing the received fax document: plain paper, bond paper, recycled paper, side 2 paper, user-defined custom paper. • Confirm the settings by selecting [Tools] > [Fax Service Settings] > [Fax Control] > [Receiving Paper Size]. **1)** Select [Receiving Paper Size] > [Tray Mode] to add a tray to be used for printing the received fax documents. **2)** Set up paper so that the tray specified for [Tray Mode] can be used for printing the received fax documents. If the error still is not resolved, contact our Customer Support Center.

Other Errors

This section describes the remedies when the following messages are displayed.

ErrorMessage	Cause and Remedy
A fault has occurred. Switch off the machine. (xxx-yyy)	**[Cause]** An error occurred. **[Remedy]** Switch off the machine power, make sure that the touch screen is blank, and then switch the machine power on again. If the message persists, record the content displayed for [(xxx-yyy)]. Then immediately switch the main power and power off, make sure that the touch screen is blank, and then contact our Customer Support Center.
Completed with an error. (xxx-yyy)	**[Cause]** An error occurred, and the operation terminated abnormally. **[Remedy]** Execute the operation again.
A fault has occurred. The machine has rebooted. Select [Close]. If the problem persists, call for service. (xxx-yyy)	**[Cause]** An auto-recoverable internal error occurred, and the machine restarted automatically. **[Remedy]** Select [Close] to use the machine normally. If the error still is not resolved, contact our Customer Support Center.

Paper Jams

When a paper jam occurred, the machine stops and an alarm beeps. A message is also displayed on the touch screen. Follow the instructions displayed to remove the jammed paper.

Gently remove the paper to avoid it to be torn. If the paper is torn, remove all the torn pieces, making sure that none remain inside the machine.

If a paper jam message appears again after you have cleared the paper jam, another paper jam may be occurred in some other parts of the machine. Clear this by following the message.

When the paper jam is cleared, printing is automatically resumed from the point when the paper jam occurred.

If you were during copying, press the <Start> button to resume the copying from the point when the paper jam occurred.

⚠WARNING

If you need to pull out a tray to remove paper jam, contact your local Fuji Xerox representative. Do not pull out a tray, otherwise it may cause injuries.

⚠CAUTION

Do not attempt to remove a paper deeply jammed inside the product, particularly a paper wrapped around the fusing unit or the heat roller. Otherwise, it may cause injuries or burns. Switch off the product immediately and contact your local Fuji Xerox representative.

This section describes how to clear a paper jam occurring in the following locations

The following shows the reference section for the procedures to clear a paper jam in each location.

"Paper Jams in Trays 1 to 4" (P.613)

"Paper Jams in Tray 5" (P.613)

"Paper Jams in Top Left Cover A" (P.615)

"Paper Jams in Bottom Left Cover B (for 2-tray configuration)" (P.617)

"Paper Jams in Bottom Left Cover B (for 4-tray configuration)" (P.617)

"Paper Jams in Top Left Cover C" (P.618)

"Paper Jams in Duplex Module" (P.619)

"Paper Jams in Finisher-A1" (P.620)

"Paper Jams in Finisher-B1" (P.621)

Important

- When a paper jam occurred, if you pull out a paper tray without checking the paper jam location, the jammed paper may be torn and the pieces may remain inside the machine. This may cause machine malfunctions; therefore, always check where the paper jam occurred first.
- If any piece of jammed paper remains inside the machine, the paper jam message will not disappear from the touch screen.
- Clear the paper jams while the machine is powered on. If you turn off the machine, all data stored on the memory of the machine will be erased.
- Do not touch components inside the machine. This may cause print defects.

Paper Jams in Trays 1 to 4

The following describes how to clear paper jams occurring in Trays 1 to 4.

1 Pull out the tray where the paper jam occurred.

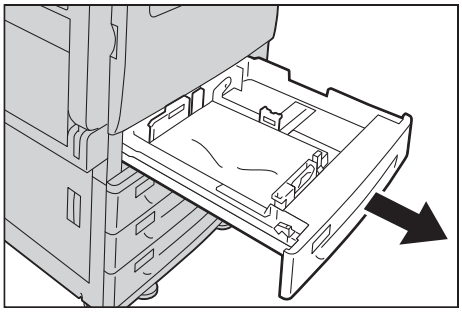

Important

- If you pull out a paper tray without checking the paper jam location, the jammed paper may be torn and the pieces may remain inside the machine. This may cause machine malfunctions; therefore, always check where the paper jam occurred first.

2 Remove the jammed paper.

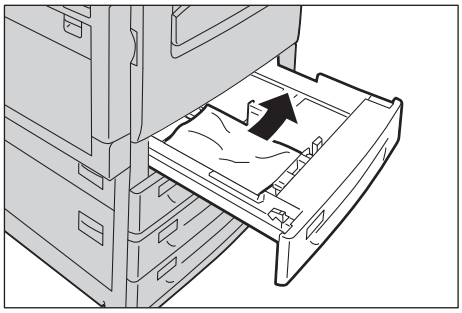

3 Push the tray in gently until it stops.

Paper Jams in Tray 5

The following describes how to clear paper jams occurring in Tray 5.

1 While lifting up the release lever of the top left cover (1), open the cover gently (2).

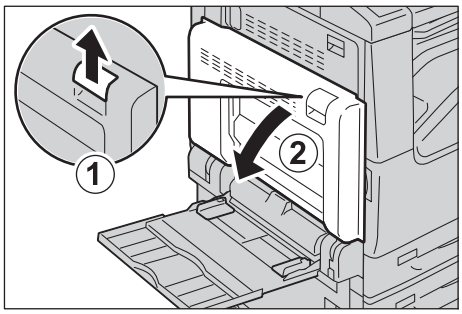

2 Remove the jammed paper.

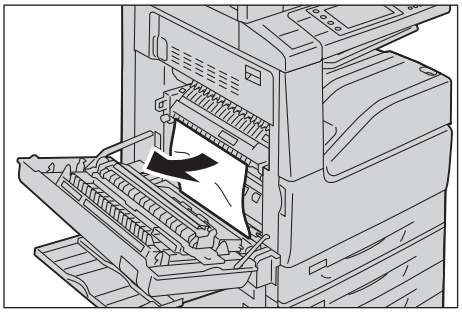

Important

- The fusing unit is extremely hot. Do not touch the fusing unit as it may result in burn injury.

Note

- If the paper is torn, make sure no piece of paper remains inside the machine.

3 Close the top left cover gently by pressing on the center of the cover.

4 Check the back of Tray 5 (around the paper feed entrance) and remove the jammed paper.

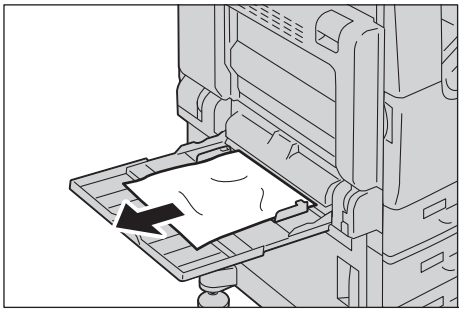

Important

- When two or more sheets of paper are loaded, remove all of the sheets from the tray.

Note

- If the paper is torn, make sure no piece of paper remains inside the machine.

5 When two or more sheets of paper were loaded, neatly align all four corners of the paper.

6 Insert the paper into the tray with the printing side facing down until its edge lightly touches against the paper feed entrance.

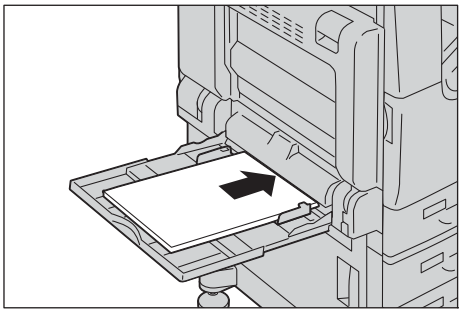

Paper Jams in Top Left Cover A

The following describes how to clear paper jams occurring in the top left cover.

Important

- Do not touch the black film like the transfer belt inside the top left cover when you remove the jammed paper because images might be shifted on the transfer belt. If you touch the belt, the image quality might be deteriorated or the belt may be damaged and need replacement.

1 Open Tray 5.

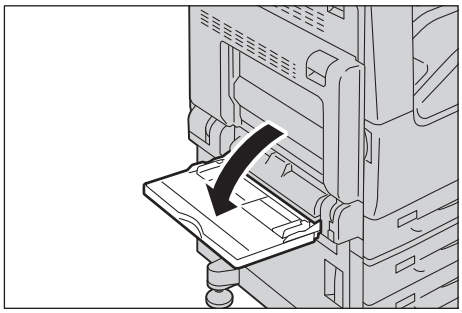

■**When the Side Tray (optional) is installed**

Remove paper from the Side Tray.

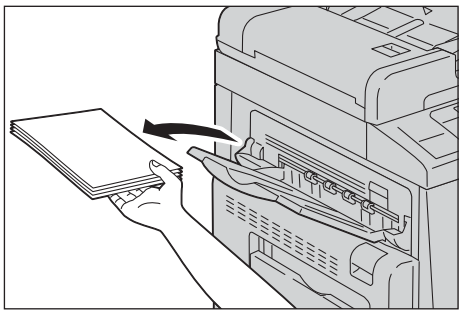

2 While lifting up the release lever of the cover A (1), open the cover (2).

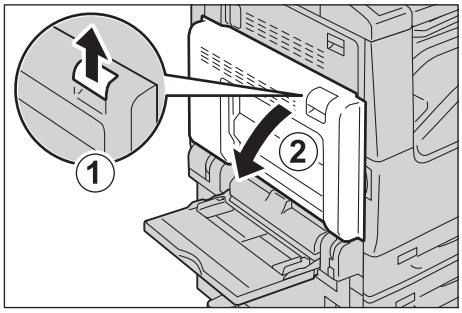

3 If paper is jammed outside the fusing unit, remove the jammed paper, and then proceed to step 6. If paper is jammed inside the fusing unit, proceed to step 4.

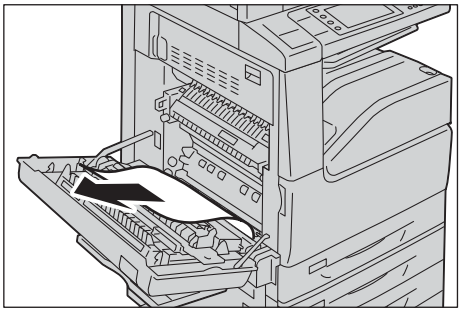

4 Pull down the lever A1 in the arrow direction, and then open the fusing unit cover.

Important

- The fusing unit is extremely hot. Do not touch the fusing unit as it may result in burn injury.

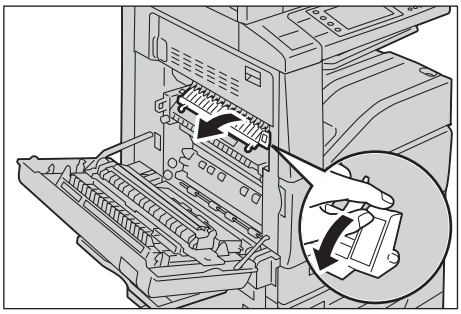

5 Remove the jammed paper in the arrow direction.

Important

- The fusing unit is extremely hot. Do not touch the fusing unit as it may result in burn injury.

Note

- If the paper is torn, make sure no piece of paper remains inside the machine.

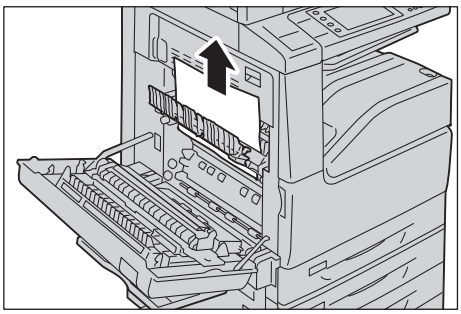

6 Return the lever A1 to its original position to close the fusing unit cover.

7 Close the cover A firmly.

8 Close Tray 5.

Paper Jams in Bottom Left Cover B (for 2-tray configuration)

The following describes how to clear paper jams occurring in the bottom left cover.

1 Gently open the bottom left cover B while pulling the release lever.

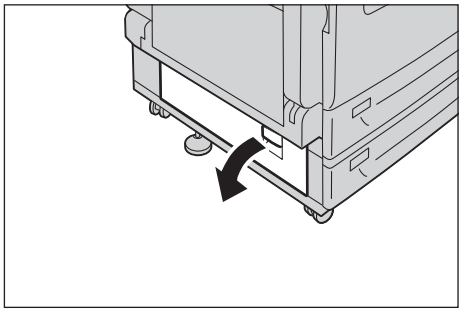

2 Remove the jammed paper.

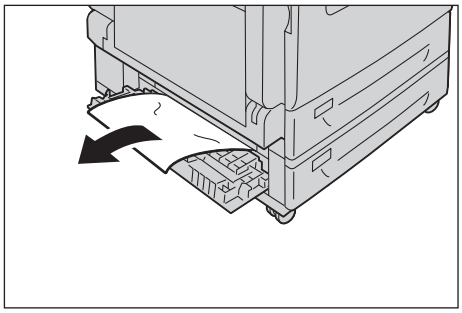

Note

- Paper may be jammed in the hidden area on the upper position. Check inside thoroughly.
- If the paper is torn, make sure no piece of paper remains inside the machine.

3 Close the bottom left cover B gently.

Paper Jams in Bottom Left Cover B (for 4-tray configuration)

1 Gently open the bottom left cover C while pulling the release lever.

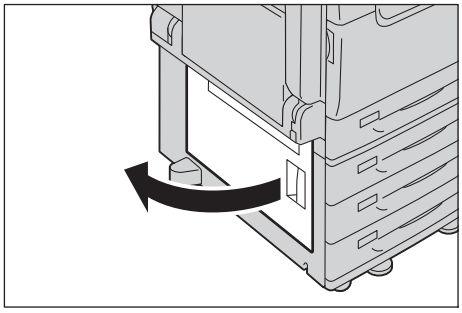

2 Remove the jammed paper.

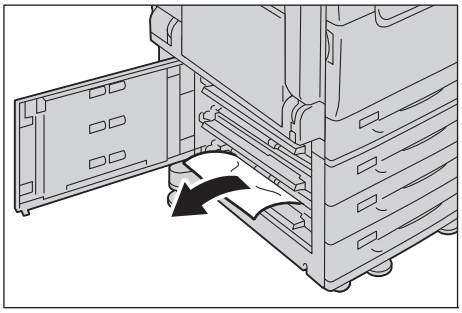

Note

- Paper may be jammed in the hidden area on the upper position. Check inside thoroughly.
- If the paper is torn, make sure no piece of paper remains inside the machine.

3 Close the bottom left cover gently.

Paper Jams in Top Left Cover C

The following describes how to clear paper jams occurring in the top left cover.

Important

- Do not touch the black film like the transfer belt inside the top left cover when you remove the jammed paper because images might be shifted on the transfer belt. If you touch the belt, the image quality might be deteriorated or the belt may be damaged and need replacement.

1 Open Tray 5.

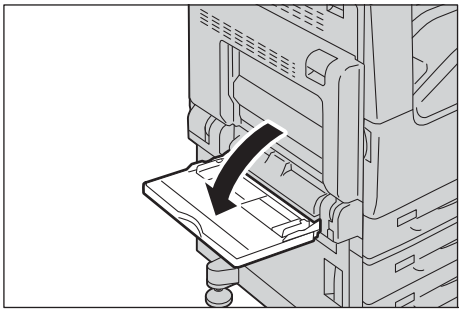

■When the Side Tray (optional) is installed

Remove paper from the Side Tray.

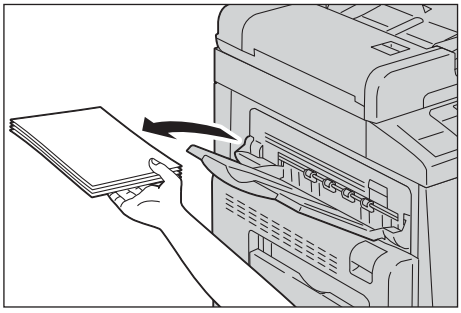

2 While lifting up the release lever of the cover A (1), open the cover (2).

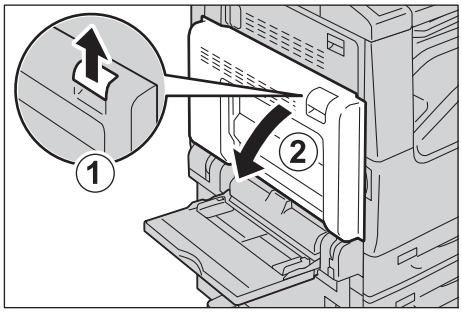

3 While lifting up the lever, open top left cover C.

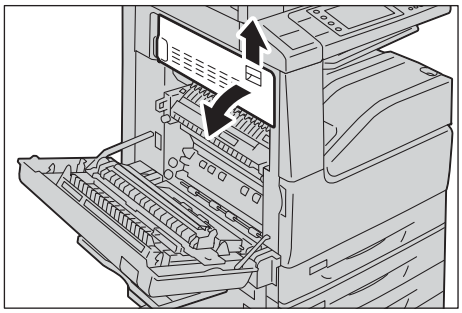

Important

- The fusing unit is extremely hot. Do not touch the fusing unit as it may result in burn injury.

4 Remove the jammed paper.

Note

- If the paper is torn, make sure no piece of paper remains inside the machine.

5 Close the top left cover C.

6 Push the center of the top left cover A and close the cover gently, and then close Tray 5.

Paper Jams in Duplex Module

The following describes how to clear paper jams occurring in the duplex module.

1 Open Tray 5 (1), and then while lifting up the lever of the cover A (2), gently open the cover A (3).

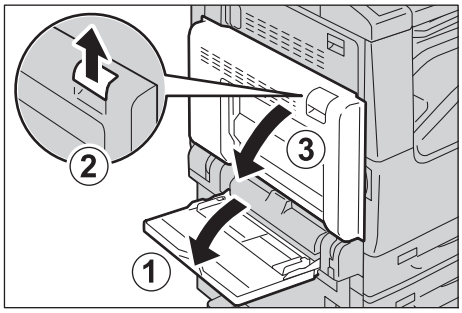

2 Remove the jammed paper.

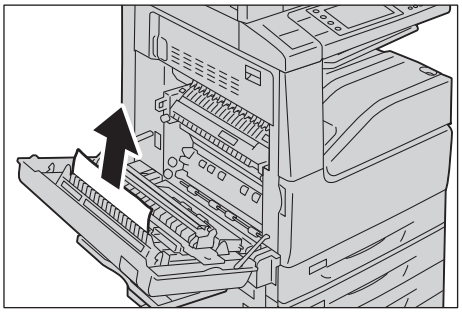

■**If the paper is jammed in the chute of the cover A**

Lift up the lever A2, remove the jammed paper, and return the lever A.

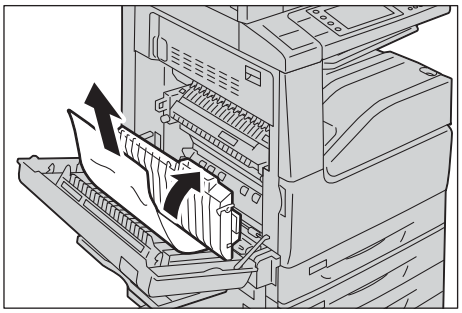

Note

- If the paper is torn, make sure no piece of paper remains inside the machine.

3 Close the cover A, and then close Tray 5.

Paper Jams in Finisher-A1

The following describes how to clear paper jams occurring in the Finisher-A1 (optional).

The following shows the reference section for the procedures to clear a paper jam in each location.

Paper Jams under the Finisher Top Cover

1 Open the finisher top cover (1), turn the knob (2), and then remove the jammed paper (3).

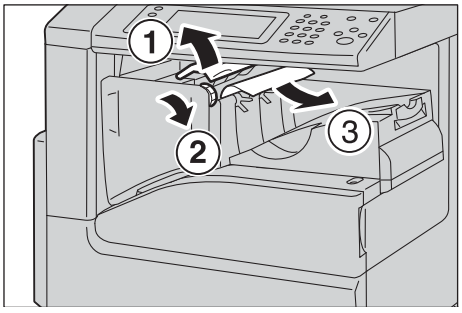

Note

- If the paper is torn, make sure no piece of paper remains inside the machine.

2 Close the finisher top cover.

Paper Jams in Finisher-B1

The following describes how to clear paper jams occurring in the Finisher-B1 (optional).

Paper Jams under the Finisher Top Cover

1 Push up the lever on the finisher top cover.

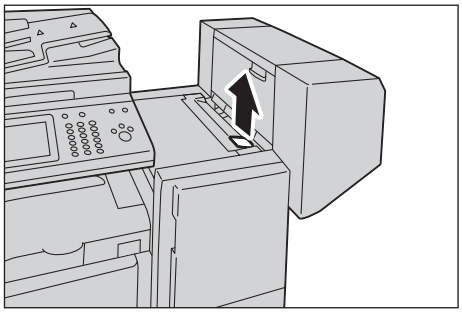

2 The finisher top cover opens.

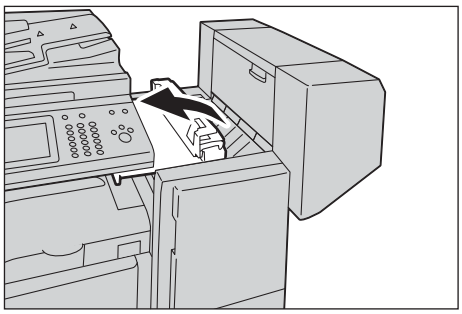

3 Remove the jammed paper.

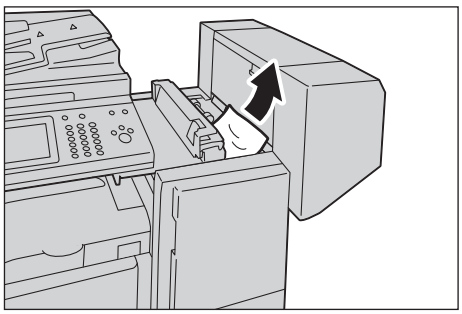

Note

- If the paper is torn, make sure no piece of paper remains inside the machine.

4 Close the finisher top cover.

Paper Jams in the Center Unit

1 Lift the top cover and open.

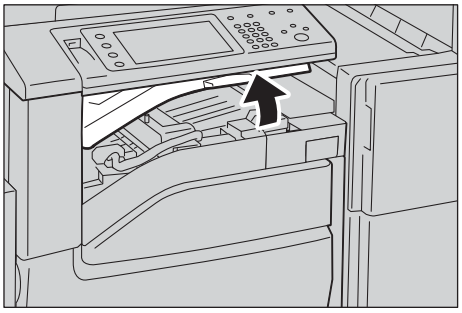

Important

- The top cover cannot be detached from the machine.

2 Remove the jammed paper.

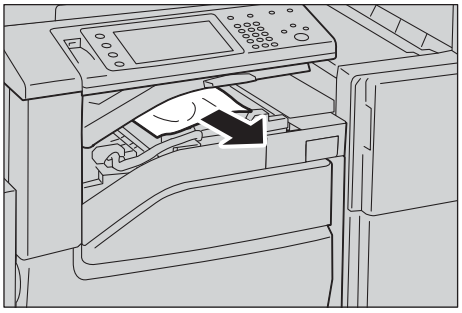

Note

- If the paper is torn, make sure no piece of paper remains inside the machine.

3 Close the finisher top cover.

Document Jams

Document Jams

When a document jam occurred in the document feeder, the machine stops and a message is displayed on the touch screen. Follow the instructions displayed to clear the document jam and then load the document in the document feeder again.

1 Pull up the handle of the top cover of the document feeder, and then open the top cover until it stops.

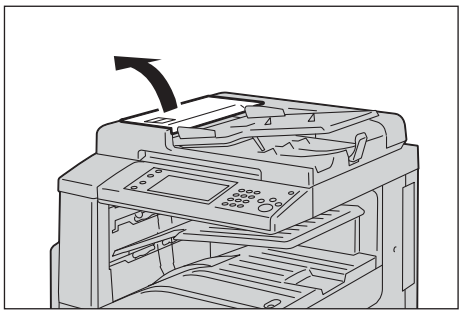

Note

- When you fully open the cover, it enters a fixed position. Open the cover gently.

2 If the document is not caught in the entry of the document feeder, pull out the document.

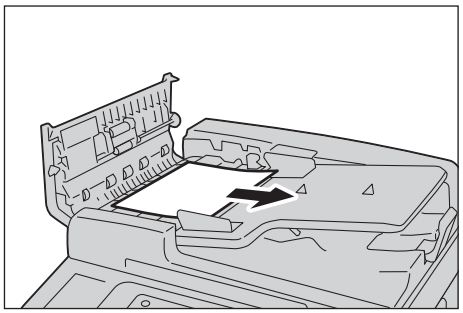

3 If the message on the screen instructs you to turn the knob, turn the knob to eject the document upward.

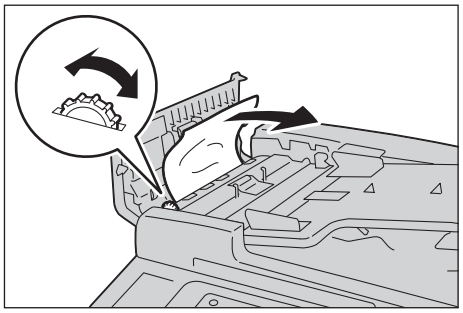

Important

- If the document is caught, do not pull it out forcibly. The document could be damaged.

4 If the message on the display instructs you to open the inner cover, lift up the handle, and open the inner cover.

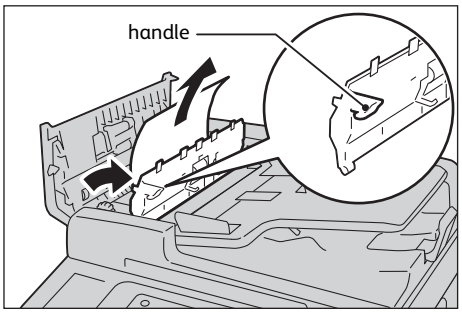

5 Turn the knob to eject the document upward to remove.

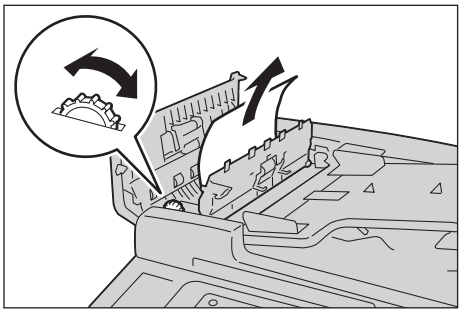

Important

- If the document is caught, do not pull it out forcibly. The document could be damaged.

6 Close the inner cover of the document feeder.

7 Close the left cover of the document feeder until it clicks into place, and confirm that there is no space between the near or far side of the cover and the document feeder.

8 If you cannot find the document, lift the document feeder gently, and remove the document if it is there, and then close the document feeder.

9 If you still cannot find the document in step 8, lift the document feeder tray and remove the document.

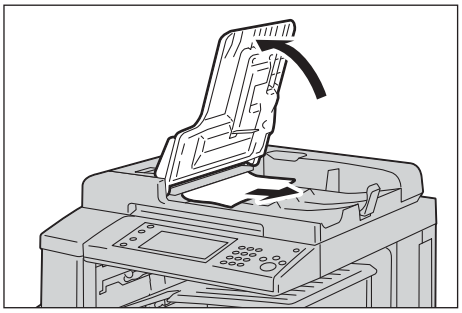

10 Return the document feeder tray gently.

11 Make sure that the document is not torn, wrinkled or folded, and then load the document again following the instructions displayed on the touch screen.

Note

- After removing the jammed document, reload the entire document including the pages already scanned. The machine will automatically skip the scanned pages and start scanning unscanned pages.
- Torn, wrinkled or folded documents may cause document jams and damage. To scan such documents, directly place the document on the document glass to make copies.

Stapler Faults

This section describes how to clear stapler troubles when the optional finisher is installed.

Perform the procedures on the following pages when copies are not stapled or staples are bent. Contact our Customer Support Center if the problem persists after you have tried the following solutions.

Important

- Even if the sheets have been stapled together properly, staples may rise up depending on the way you handle the sheets.

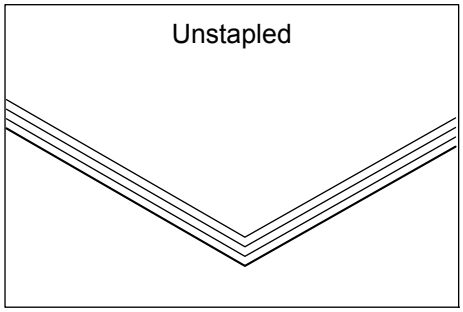

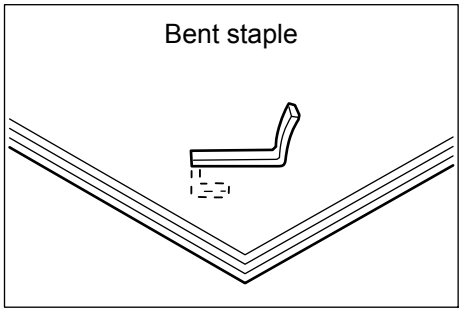

If copies are stapled as shown in the figures below, contact our Customer Support Center.

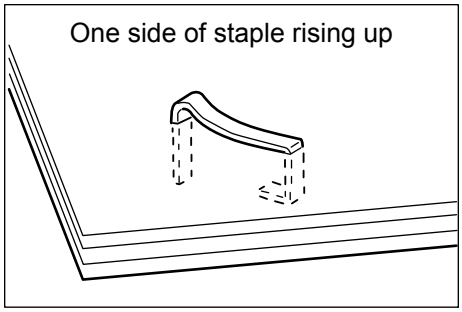

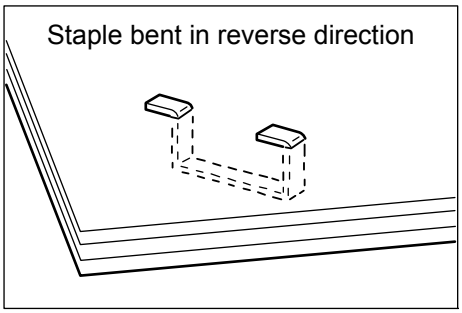

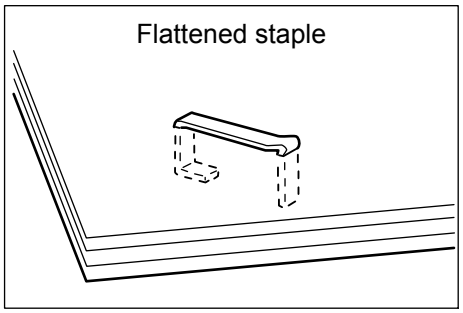

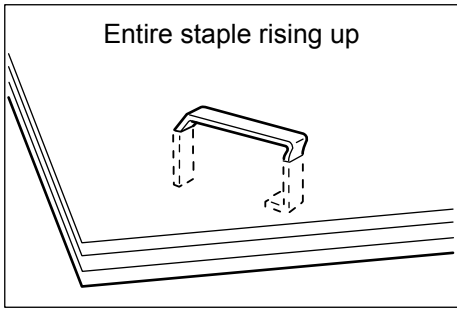

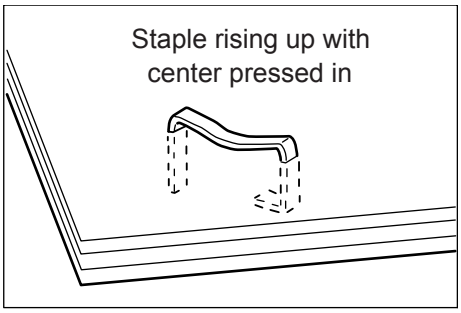

Important

- Remove the bent staple when opening the staple cartridge cover. If you do not remove the bent staple, a staple jam may occur as a result. Use the staple cartridge cover only when removing the bent staple.

Staple Jams in Staple Cartridge (For Finisher-A1)

This section describes how to clear staple jam occurred in the staple cartridge of the Finisher-A1 (optional).

1 Make sure that the machine is not operating, and open the finisher front cover.

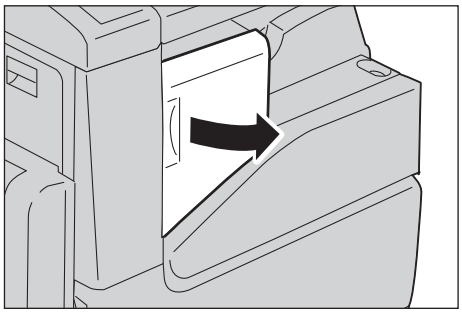

2 Take the staple cartridge out of the machine.

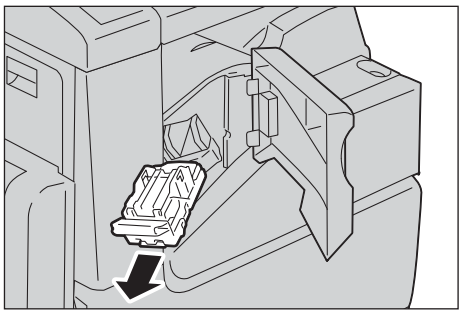

Note

- The staple cartridge is firmly inserted. A slight force is required to pull the cartridge out of the finisher.

3 After you take out the staple cartridge, check inside of the finisher for any remaining staples.

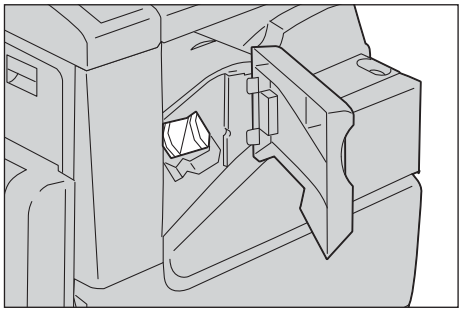

4 Pull up the metal part of the staple cartridge as shown in the illustration.

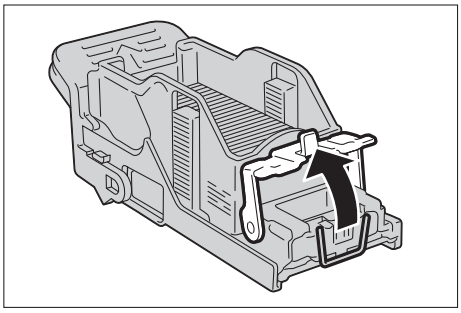

5 Remove the jammed staples (1), and then return the metal part pulled up in step 4 to the original position (2).

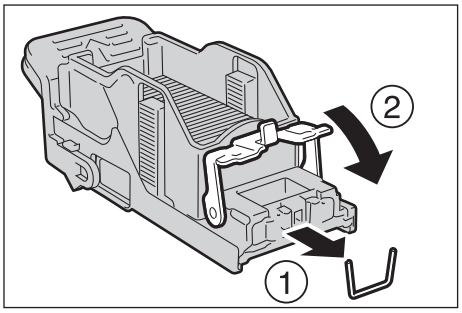

> ⚠**CAUTION**
>
> **Be careful in removing jammed staples.**

6 Push the staple cartridge into the machine until it clicks into place.

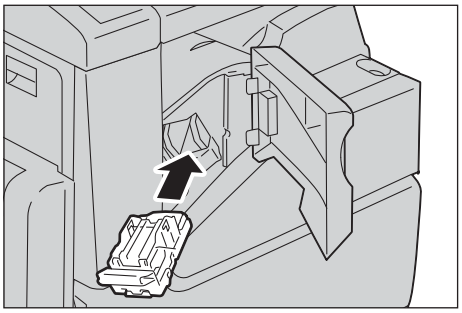

7 Close the finisher front cover.

Note

- If the finisher front cover is not completely closed, a message will appear and the machine remains paused.

If you cannot remove jammed staples even after you perform the above procedure, contact our Customer Support Center.

Staple Jams in Staple Cartridge (For Finisher-B1)

This section describes how to clear staple jam occurred in the staple cartridge of the Finisher-B1 (optional).

1 Make sure that the machine is not operating, and open the finisher front cover.

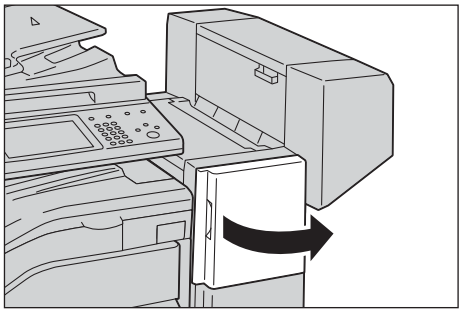

2 Grasp the handle as shown in the illustration to pull out the staple cartridge to the right, towards you.

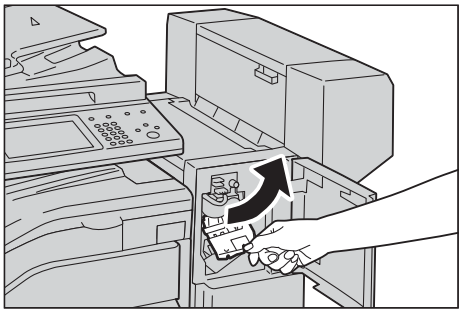

3 Move up the staple cartridge, and then take it out of the machine.

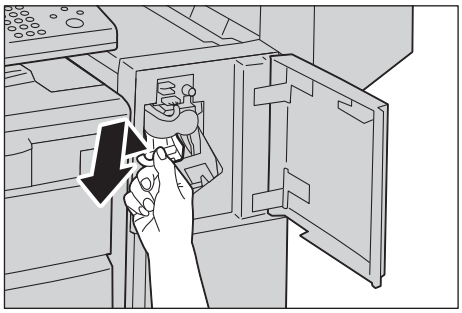

4 After you take out the staple cartridge, check inside of the finisher for any remaining staples.

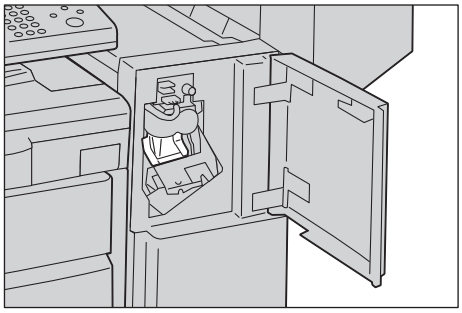

5 Pull up the metal part of the staple cartridge as shown in the illustration.

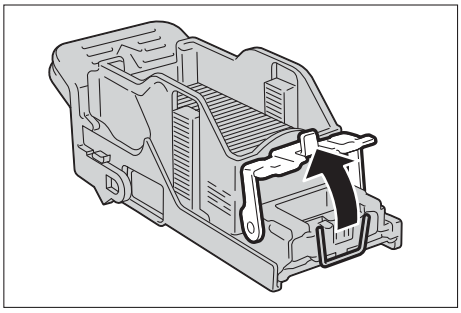

6 Remove the jammed staples (1), and then return the metal part pulled up in step 5 to the original position (2).

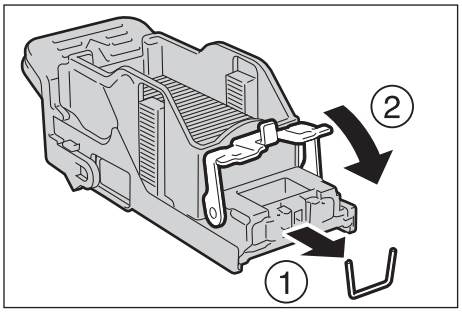

⚠CAUTION

- **Be careful in removing jammed staples.**

7 Push the staple cartridge into the machine until it clicks into place.

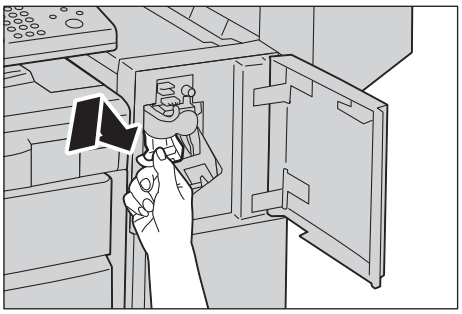

8 Close the finisher front cover.

Note

- If the finisher front cover is not completely closed, a message will appear and the machine remains paused.

16
Appendix

Specifications

This section lists the main specifications of the machine. Note that the specifications and the appearance of the product may change without prior notice.

Copy Function

■ Type

Console

■ Memory

4 GB (Maximum: 4 GB)

■ HDD (optional)

160 GB or larger (Usable Space: 128GB)

Important

- Not all the HDD space described above can be used.

■ Color Capability

Full color

■ Scanning Resolution

600 X 600 dpi

■ Printing Resolution

600 X 600 dpi

■ Halftone/Printable Colors

256 levels of color (16.7 Million colors)

■ Warm-up Time

- With HDD

  32 seconds or less.

  22 seconds or less if the main power is on (24 °C room temperature)

- Without HDD

  30 seconds or less.

  18 seconds or less if the main power is on (24 °C room temperature)

■ Original Size

The maximum size is 297 x 432 mm (A3, 11 x 17") for both sheets and books.

■ Paper Size

[Paper Tray 1 to 4]

- Maximum : A3, 11 x 17"
- Minimum : A5

[Paper Tray5]

- Maximum : A3, 11 x 17"

- Minimum : Postcard (148 X 100 mm), Envelope Monarch (191 x 98 mm)

Image loss width: Top edge, 4 mm or less; bottom edge, 2 mm or less; left and right edges, 2 mm or less

■ Paper Weight

Paper Tray 1 to 4: 60 to 256 gsm

Paper Tray 5: 60 to 216 gsm

Important

- Use paper recommended by Fuji Xerox. Copying may not be performed correctly depending on the conditions.

■ First Copy Output Time

Important

- The values may vary depending on the machine configuration.

Monochrome: 5.9 seconds (for A4▯/monochrome priority mode)

Color: 8.1 seconds (for A4▯/color priority mode)

■ Continuous Copy Speed

Important

- When paper is fed from Tray 5 and the paper size is set to [Auto Detect], the printing speed for the first page will be slower.
- The speed may be reduced due to image quality adjustment.
- The performance may be reduced depending on the paper type or paper tray.
- When paper in width narrower than B5, such as postcards, isoutput continuously, the temperature on the fusing unit becomes high. As a result, the machine may suspend the output, displaying a message "Please wait", and may resume in 1 minute. Also, for paper A5 or smaller, even after 1 sheet of paper is output, the machine may suspend with a "Please wait" message and may resume in 30 seconds.

<DocuCentre-V C2265>

- A4▯/B5▯

  Monochrome: 25 sheets/minute

  Color: 25 sheets/minute
- A4

  Monochrome: 19 sheets/minute

  Color: 19 sheets/minute
- B4

  Monochrome: 16 sheets/minute

  Color: 16 sheets/minute
- B5

  Monochrome: 14 sheets/minute

  Color: 14 sheets/minute
- A3

  Monochrome: 14 sheets/minute

  Color: 14 sheets/minute

<DocuCentre-V C2263>

- A4▯/B5▯

Monochrome: 20 sheets/minute

Color: 20 sheets/minute

- A4

  Monochrome: 16 sheets/minute

  Color: 16 sheets/minute

- B4

  Monochrome: 13 sheets/minute

  Color: 13 sheets/minute

- B5

  Monochrome : 11 sheets/minute

  Color: 11 sheets/minute

- A3

  Monochrome: 11 sheets/minute

  Color: 11 sheets/minute

■ Paper Tray Capacity

- 4-tray model

  Standard: 500 sheets x 4 trays + 100 sheets (bypass tray)

  Maximum paper capacity: 2,100 sheets (Same as the standard)

- 2-tray model

  Standard: 500 sheets x 2 trays + 100 sheets (bypass tray)

  Maximum paper capacity: 1,100 sheets (Same as the standard)

Important

- When using 80 gsm paper.

■ Output Tray Capacity

Exit 2 Tray: approximately 250 sheets (A4)

Center tray: approximately 250 sheets (A4)

Important

- When using 80 gsm paper

■ Power Supply

AC220-240 V ± 10 % , 8 A, 50/60 Hz ± 10 % common

AC110 V ± 10 % , 15 A, 60 Hz ± 10 % (1 Power)

■ Maximum Power Consumption

1.76 kW or less (AC 220 V±10 %), 1.92 kW or less (AC 240 V±10 %), 1.65 kW or less (AC 110 V±10 %)

Sleep mode: 1.0 W or less (AC 230 V), 1.0 W or less (AC 115 V)

Low Power mode: 53 W or less (AC 230 V), 54 W or less (AC 115 V)

■ Dimensions

Standard: Width 590 x Depth 659 x Height 768 mm

When the 1 Tray Module is installed: Width 590 x Depth 659 x Height 882 mm

When the 1 Tray Module with Cabinet is installed: Width 616 x Depth 659 x Height 1,119 mm

When the 3 Tray Module is installed: Width 616 x Depth 659 x Height 1,119 mm

■ Weight

Standard: 68 kg

When the 1 Tray Module is installed: 78 kg

When the 1 Tray Module with Cabinet is installed: 92 kg

When the 3 Tray Module is installed: 94 kg

Important

- The weight is without the power cord, a toner cartridge or any paper.

■ Space Requirement

Width 969 x Depth 659 mm (when the Bypass tray is fully extended and the stopper of DADF is turned on)

Print Function

■ Type

Built-in

■ Continuous Print Speed

Same as the Basic Specifications / Copy Function

Important

- The speed may be reduced due to image quality adjustment. The speed may also be reduced depending on the document attributes.

■ Print Resolution

1200 X 2400 dpi

■ Page Description Language

Standard: PCL6, PCL5

Optional: Adobe® PostScript® 3™

■ Network Protocol

- Ethernet (standard):

  TCP/IP (Ipd, IPP, Port9100, WSD, ThinPrint®)

Note

- WSD stands for Web Services on Devices.

■ Supported Operating System

- Standard : PCL6

  Windows Server® 2003,

Windows Server® 2003 x64,

Windows Vista® ,

Windows Vista® x64,

Windows Server® 2008,

Windows Server® 2008 x64,

Windows® 7,

Windows® 7 x64,

Windows Server® 2008 R2 x64,

Windows ® 8,

Windows ® 8 x64,

Windows Server® 2012 x64,

Windows Server® 2012 R2 x64,

Windows ® 8.1,

Windows ® 8.1 x64,

Mac OS X 10.5/10.6, Mac OS X 10.7 Lion, OS X 10.8 Mountain Lion, OS X 10.9 Mavericks, OS X 10.10 Yosemite

- Optional : PostScript® 3™

Windows Server® 2003,

Windows Server® 2003 x64,

Windows Vista® ,

Windows Vista® x64,

Windows Server® 2008,

Windows Server® 2008 x64,

Windows® 7,

Windows® 7 x64,

Windows Server® 2008 R2 x64,

Windows ® 8,

Windows ® 8 x64,

Windows Server® 2012 x64,

Windows Server® 2012 R2 x64,

Windows ® 8.1,

Windows ® 8.1 x64,

Mac OS X 10.5/10.6, Mac OS X 10.7 Lion, OS X 10.8 Mountain Lion, OS X 10.9 Mavericks, OS X 10.10 Yosemite

Important

- For information about the latest supported OS, contact our Customer Support Center.

■ Fonts

- Standard (PCL):

  European 82 type faces, symbol 43 sets, Korean font 6 type faces, Chinese font 1 type face, Chinese font 4 type faces (optional), Symbol set, Chinese Font (ShuSong), Korean Fonts (Myungio, Gothic, Round Gothic, Graphic, Kungso, Saemul)

  Japanese font 2 type faces, Japanese font (Heisei Mincho W3, Heisei Kaku Gothic W5)

- Optional (Adobe® PostScript® 3™):

  136 European fonts

  TC/SC Additional Font ROM Kit: 4 Chinese Fonts (ShuSong, KaiTi, HeiTi, FangSong)

■ Emulation

ESC/P-K (LQ1900K II), TIFF, JPEG, PDF, XPS, HP-GL (HP7586B), HP-GL/2 /RTL (HP Designjet 750C Plus), DocuWorks, PCL5/PCL6 (HP Color LaserJet 5500), KSSM, KS5843, KS5895

Note

- XPS stands for XML Paper Specification.

■ Interface

Ethernet 1000BASE-T/100BASE-TX/10BASE-T, USB 2.0*

* : Supported by Windows Server 2003, Windows Server 2008, Windows Vista, Windows 7, Windows 8, Windows 8.1, Windows Server 2012, Windows Server 2012 R2, Mac OS X 10.5/10.6, Mac OS X 10.7 Lion, OS X 10.8 Mountain Lion, OS X 10.9 Mavericks, OS X 10.10 Yosemite.

Scan Function (Optional)

■ Type

Color Scanner

■ Original Size

Same as the Basic Specifications / Copy Function

■ Scan Resolution

600 x 600 dpi, 400 x 400 dpi, 300 x 300 dpi, 200 x 200 dpi

■ Scanning Speed

Monochrome: 55 sheets/minute, Color: 55 sheets/minute

(For Fuji Xerox standard paper A4, 200 dpi, Store to Folder)

Important

- The scanning speed varies depending on documents.

■ Interface

Ethernet 1000BASE-T/100BASE-TX/10BASE-T

■ Scan to Folder

- Protocol:TCP/IP (WebDAV, HTTP)
- File Format:
  - Monochrome Binary:TIFF, DocuWorks*1, PDF*1, XPS*1
  - Gray Scale:TIFF, JPEG*2, DocuWorks*1, PDF*1, XPS*1

- Full Color:TIFF, JPEG, DocuWorks*1, PDF*1, XPS*1, High-compressed DocuWorks*1, High-compression PDF*1, High-compression XPS*1

Note

- XPS stands for XML Paper Specification.

*1 : Supported only when documents are retrieved using CentreWare Internet Services.
*2 : Supported only when documents are retrieved using Network Scanner Utility 3.

- Driver:

  TWAIN

- Operating System:

  Windows Server® 2003,

  Windows Server® 2003 x64,

  Windows Vista® ,

  Windows Vista® x64,

  Windows Server® 2008,

  Windows Server® 2008 x64,

  Windows® 7,

  Windows® 7 x64,

  Windows Server® 2008 R2 x64,

  Windows ® 8,

  Windows ® 8 x64,

  Windows Server® 2012 x64,

  Windows Server® 2012 R2 x64,

  Windows ® 8.1,

  Windows ® 8.1 x64,

  Mac OS X 10.5/10.6, Mac OS X 10.7 Lion, OS X 10.8 Mountain Lion, OS X 10.9 Mavericks, OS X 10.10 Yosemite

Important

- For information about the latest supported OS, refer to the Fuji Xerox Web site.

■ Scan to PC

- Protocol: TCP/IP (SMB, FTP)
- Supported OS:

  Windows Server® 2003,

  Windows Server® 2003 x64,

  Windows Vista® ,

  Windows Vista® x64,

  Windows Server® 2008,

  Windows Server® 2008 x64,

  Windows® 7,

Windows® 7 x64,

Windows Server® 2008 R2 x64,

Windows ® 8,

Windows ® 8 x64,

Windows Server® 2012 x64,

Windows Server® 2012 R2 x64,

Windows ® 8.1,

Windows ® 8.1 x64,

Mac OS X 10.5/10.6, Mac OS X 10.7 Lion, OS X 10.8 Mountain Lion, OS X 10.9 Mavericks, OS X 10.10 Yosemite*

* : Supports FTP protocol only.

Important

- For information about the latest supported OS, refer to the Fuji Xerox Web site.

- File Format:
  - Monochrome binary:
    TIFF, DocuWorks, PDF, XPS
  - Gray scale/Full color:
    TIFF, JPEG, DocuWorks, PDF, XPS, high-compressed DocuWorks, high-compressed PDF, high-compressed XPS

Note

- XPS stands for XML Paper Specification.

■ Scan to E-mail

- Protocol:

  TCP/IP (SMTP)

- File Format:
  - Monochrome binary:
    TIFF, DocuWorks, PDF, XPS
  - Gray scale/Full color:
    TIFF, JPEG, DocuWorks, PDF, XPS, high-compressed DocuWorks, high-compressed PDF, high-compressed XPS

Note

- XPS stands for XML Paper Specification.

Fax Function (optional)

■ Send Document Size

Maximum : A3, 11 x 17", Long document (Maximum 600mm)

■ Recording Paper Size

Maximum: A3, 11 x 17", Minimum: A5

■ Transmission Time

2 seconds or more but below 3 seconds

Important

- When A4 size document with approximately 700 characters is transmitted in standard image-quality (8 x 3.85 lines/mm) and in high-speed mode (28.8kbps or faster, JBIG). Only indicates the time for transmitting the image information and does not include the controlling time for the communication. Note that the actual transmission time depends on the content of documents, the machine that the recipient uses, and the status of the communication line. 。

■ Transmission Mode

ITU-T G3

■ Scanning Resolution

- Standard: 8 x 3.85 lines/mm, 200 x 100 dpi
- Fine: 8 x 7.7 lines/mm, 200 x 200 dpi
- Superfine(400 dpi): 16 x 15.4 lines/mm, 400 x 400 dpi
- Superfine(600 dpi): 600 x 600dpi

■ Coding Method

MH, MR, MMR, JBIG

■ Transmission Speed

G3:

33.6/31.2/28.8/26.4/24.0/21.6/19.2/16.8/14.4/12.0/9.6/7.2/4.8/2.4 kbps

■ Applicable Lines

Telephone subscriber line, PBX, fax communication (PSTN), maximum 3 ports * (G3-3 port)

* : Up to three lines can be connected for G3 communications. Ports indicate the number of connectable channels.

Direct Fax Function (optional)

■ Document Size

A3, B4, A4

■ Transmission Speed

Same as the Fax Function

■ Resolution

Same as Scanning Resolution in the Fax Function

■ Applicable Lines

Same as the Fax Function

■ Supported Operating System

- PCL6 Driver

  Windows Server® 2003,

  Windows Server® 2003 x64,

  Windows Vista® ,

Windows Vista® x64,

Windows Server® 2008,

Windows Server® 2008 x64,

Windows® 7,

Windows® 7 x64,

Windows Server® 2008 R2 x64,

Windows ® 8,

Windows ® 8 x64,

Windows Server® 2012 x64,

Windows Server® 2012 R2 x64,

Windows ® 8.1,

Windows ® 8.1 x64,

- Mac OS X Driver

  Mac OS X 10.5/10.6, Mac OS X 10.7 Lion, OS X 10.8 Mountain Lion, OS X 10.9 Mavericks, OS X 10.10 Yosemite

Important

- For information about the latest supported OS, refer to the Fuji Xerox Web site.

Internet Fax Function (optional)

■ Document Size

A3, B4, A4

■ Scanning Resolution

Same as the Fax function

■ File Format

Format: TIFF-FX

Compression method: MH, MMR, JBIG

■ Profile

TIFF-S, TIFF-F, TIFF-J

■ Network Protocol

Transmission: SMTP, Reception: SMTP, POP3

■ Interface

Ethernet 1000BASE-T/Ethernet 100BASE-TX/10BASE-T

IP Fax (SIP) Function (optional)

■ Document Size

Same as the Fax Function

■ Scanning Resolution

Same as the Fax Function

■ Supported Protocol

SIP, JT-T.38

■ Coding Method

Same as the Fax Function

■ Interface

Ethernet 1000BASE-T/Ethernet 100BASE-TX/10BASE-T

Duplex Automatic Document Feeder

■ Type

Duplex Automatic Document Feeder

■ Original Size / Paper Weight

- Max : A3, 11 x 17"
- Min: A5
- 38 to 128 gsm (In Duplex : 50 to 128 gsm)

■ Capacity

110 sheets

Important

- When using 80 gsm paper

■ Feeding Speed

- DocuCentre-V C2265

  Monochrome: 25 sheets/minute (A4 1sided)

  Color: 25 sheets/minute (A4 1 sided)
- DocuCentre-V C2263

  Monochrome: 20 sheets/minute (A4 1 sided)

  Color: 20 sheets/minute (A4 1sided)

Duplex Function

■ Paper Size

Same as the Basic Specifications / Copy Function

■ Paper Weight

60 to 169 gsm

Finisher-A1 (Optional)

■ Type

Sorting (Offset available)/Stacking (Offset available)

■ Paper Size/Paper Weight

- Maximum: A3, 11 x 17"
- Minimum: Postcard (100 x 148 mm)
- 60 to 220 gsm

■ Paper Capacity

Finisher tray

- For paper not stapled

  A4: 500 sheets, B4: 250 sheets, A3 or larger: 200 sheets, Mixed stack: 250 sheets *
- For paper stapled

  30 sheets

* : Based on when larger size paper is stacked on paper.

Important

- When using 80 gsm paper

■ Dimensions/Weight

Width 559 x Depth 448 x Height 246 mm, 12 kg

■ Space Requirement (when connected to the main unit)

Width 1,036 X Depth 659 mm (main unit + Finisher-A1, when the extension tray and the bypass tray are fully extended)

Finisher-B1 (Optional)

■ Type

Sorting (Offset available)/ Stacking (Offset available)

■ Paper Size/Paper Weight

- Maximum: A3, 11 x 17"
- Minimum: B5*
- 60 to 220 gsm

* : Paper smaller than B5 is delivered to the center tray.

■ Paper Capacity

Finisher tray

- For paper not stapled:

  A4: 2000 sheets, B4 or larger: 1,000 sheets, Mixed stack*1: 300 sheets
- For paper stapled:

  A4: 100 sets or 1000 sheets, B4 or larger: 75 sets or 750 sheets
- Center binding/folding*2: 50 sets or 600 sheets

- Folding[*2]: 500 sheets

*1 : When larger size sheets are stacked on top of smaller size sheets.
*2 : The Booklet Finishing function requires the optional Finisher-B1 Booklet unit. After a job with the Booklet Finishing function specified has been output, the next job may not be delivered until the sheets are removed from the output tray. Also, if larger size sheets are stacked on top of smaller size sheets after a job with the Booklet Finishing function specified has been run, the next job may not be delivered until the sheets are removed from the output tray.

Note

- When using 80 gsm paper

■ Staple

- Capacity:

  A4: 50 sheets (90 gsm or less)
- Paper Size:

  Maximum: A3, 11 X 17"

  Minimum:B5
- Position:

  Single stapling or dual stapling

■ Punch

- Paper Size:A3, 11 x 17", B4, A4, A4 , 8.5 x 11", 8.5 x 11" , B5
- Number of Holes:2/4 holes, or 2/3 holes (US Specifications)
- Paper Weight:60 to 200 gsm

Note

- The Punch function requires the optional Finisher-B1 Punch unit for 2-hole / 4-hole punch or Finisher-B1 Punch unit for 2-hole / 3-hole punch (US Specifications).

■ Booklet Finishing

- Capacity:

  Saddle Staple: 15 sheets; Scoring: 5 sheets
- Paper Size:

  Maximum: A3, 11 x 17"

  Minimum: A4, 8.5 x 11"
- Paper Weight

  Saddle Staple : 64 to 80 gsm, Scoring : 64 to 105 gsm

Note

- The Booklet Finishing function requires the optional Finisher-B1 Booklet unit. After a job with the Booklet Finishing function specified has been output, the next job may not be delivered until the sheets are removed from the output tray. Also, if larger size sheets are stacked on top of smaller size sheets after a job with the Booklet Finishing function specified has been run, the next job may not be delivered until the sheets are removed from the output tray.

■ Dimensions/Weight

Width 657 x Depth 552 x Height 1,010 mm, 28 kg

Width 657 x Depth 597 x Height 1,080 mm, 37 kg (When the Booklet Maker Unit is attached)

Note

- The values do not include the finisher transport area located within the main unit.

■ Space Requirement (when connected to the main unit)

Width 1,573 X Depth 659 mm

With Booklet Finisher: W 1,573 x D 670 mm

Main Unit + Finisher-B1; when the paper support is pulled out and the Bypass tray is fully extended.

Side Tray (optional)

■ Paper Size/Paper Weight

Same as the Basic Specifications / Copy Function

60 to 256 gsm

■ Paper Capacity

100 sheets

Important

- When using 80 gsm paper

■ Dimensions

Width 353 x Depth 429 x Height 198 mm

■ Space Requirement (when connected to the main unit)

Width 969 x Depth 659 mm (Main unit + Side Tray, when the bypass tray is fully extended)

Printable Area

This section describes the area on paper that can be printed.

Standard Printable Area

The standard printable area is the area of a sheet of paper excluding the 4 mm margins on the upper and lower edges of paper, and 2 mm margins on the right and left edges of paper. For 13 x 18" paper (width of 330 mm), the printable area of the paper is the area excluding the 3.5 mm left and right margins. The actual printable area, however, may vary depending on the printer (plotter) control language.

Extended Printable Area

When you select the extended printable area setting for printing, you can expand the width and length of the printable area to 291.0 x 476.6 mm and the print assured area to 289.0 x 423.4 mm. The area of paper you can print to, however, may vary depending on the size of paper.

Note

- To extend the printable area, change the PCL print driver setting, or the [Print Area] setting on the touch screen.

Reference

- For more information on the setting method on the print driver, refer to the help provided for the print driver. For more information on the setting on the control panel, refer to "Print Area" (P.229).

	When the paper width is 12 inches (A3)
Printer	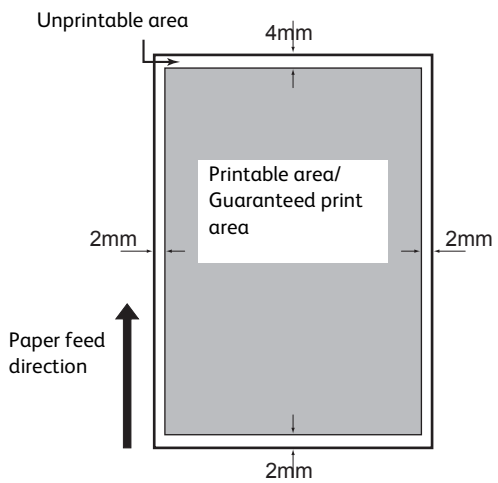

	When the paper width is 12 inches (A3)
Copy	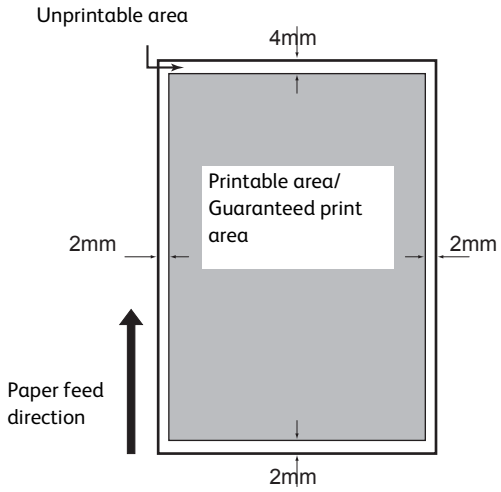

Internal Fonts

This section lists the fonts pre-installed on the machine.

Reference

- For more information on the optional PostScript fonts, refer to the manual contained in the Media provided with the PostScript 3 Kit (optional).

Stroke fonts (for PCL5 and HP-GL/2)			European Stroke fonts	
Outline fonts	Euro-pean	ESC/P-K	Arial Arial Italic Arial Bold Arial Bold Italic Courier Courier Italic Courier Bold Courier Bold Italic Roman	Sans Serif Symbol Times New Roman Times New Roman Bold Times New Roman Italic Times New Roman Bold Italic ITC Zapf Dingbats GoldSEMM GoldSAMM
		PDF	Arial Arial Italic Arial Bold Arial Bold Italic Courier Courier Italic Courier Bold Courier Bold Italic	Symbol Times New Roman Times New Roman Bold Times New Roman Italic Times New Roman Bold Italic ITC Zapf Dingbats GoldSEMM GoldSAMM

Outline fonts	Euro-pean	PCL	CG Times CG Times Italic CG Times Bold CG Times Bold Italic Univers Medium Univers Medium Italic Univers Bold Univers Bold Italic Univers Medium Condensed Univers Medium Condensed Italic Univers Bold Condensed Univers Bold Condensed Italic Antique Olive Antique Olive Italic Antique Olive Bold CG Omega CG Omega Italic CG Omega Bold CG Omega Bold Italic Garamond Antiqua Garamond Kursiv Garamond Halbfett Garamond Kursiv Halbfett (Default): Courier Courier Italic Courier Bold Courier Bold Italic Letter Gothic Letter Gothic Italic Letter Gothic Bold Albertus Medium Albertus Extra Bold Clarendon Condensed Coronet Marigold Arial Arial Italic Arial Bold Arial Bold Italic Times New Times New Italic	Times New Bold Times New Bold Italic Symbol Wingdings Line Printer Times Roman Times Italic Times Bold Times Bold Italic Helvetica Helvetica Oblique Helvetica Bold Helvetica Bold Oblique CourierPS CourierPS Oblique CourierPS Bold CourierPS Bold Oblique SymbolPS Palatino Roman Palatino Italic Palatino Bold Palatino Bold Italic ITC Bookman Light ITC Bookman Light Italic ITC Bookman Demi ITC Bookman Demi Italic Helvetica Narrow Helvetica Narrow Oblique Helvetica Narrow Bold Helvetica Narrow Bold Oblique New Century Schoolbook Roman New Century Schoolbook Italic New Century Schoolbook Bold New Century Schoolbook Bold Italic ITC Avant Garde Book ITC Avant Garde Book Oblique ITC Avant Garde Demi ITC Avant Garde Demi Oblique ITC Zapf Chancery Medium Italic ITC Zapf Dingbats OCR-B
	KO	PCL5	Myungio Gothic R- Gothic	Graphic Kungso Saemmul
		KS	Myungio Gothic R- Gothic Graphic Kungso Saemmul	T-Myungio T-Gothic TR-Gothic T-Graphic T-Kungso T-Saemmul
	TC	PCL5	ShuSong	

	SC	PCL5 ESC/P-K	ShuSong

Note

- The fonts provided will vary depending on the region of use.

Optional Components

The following table shows the optional components available. To purchase these options, contact our Customer Support Center.

Product Name	Description
Duplex Automatic Document Feeder	Scans multi-page duplex documents internally capturing both sides at once
1 Tray Module	Paper tray which contains up to 500 sheets of paper.*
1 Tray Module with Cabinet	Paper tray with a cabinet which contains up to 500 sheets of paper.*
3 Tray Module	Module with three paper trays. Each paper tray contains up to500 sheets of paper.*
Side Tray	Delivers output face up.
Finisher-A1	Staples output sheets.
Finisher-B1	Staples output sheets.
Booklet Maker Unit for Finisher-B1	Staples output sheets. Also creases output sheets in half or staples them.
US 2/3 Hole Punch Kit for Finisher-B1	2/3 hole-punches output sheets.The distance between the two holes made with the US 2/3 Hole Punch Kit (US standard) is 70 mm, which is different from the 80 mm distance made with the 2/4 Hole Punch Kit.
2/4 Hole Punch Kit for Finisher-B1	2/4 hole-punches output sheets.
HDD Extension Kit	Provides the features that require the hard disk.
Wing Table	A kit to load related products such as IC Card Reader, or to secure work space. The table can be placed on left side of the document cover.
Assist Handle	A tool to aid you in opening the document glass cover.
Secondary Ethernet Kit	Allows you to use two lines on the Ethernet interface.
Wireless LAN Converter	Converts the machine that supports 10/100/1000BASE-T wired LAN to the machine that supports wireless LAN.
Adobe PostScript 3 Kit	Allows you to use the machine as a PostScript printer. Also enables printing from Macintosh.
Multi-Language Font Kit	A Unicode™ font kit which supports the PCL language for principal systems like SAP. **Note** • Unicode™ is a character code advocated by Xerox to handle multiple languages such as Chinese, Korean, Japanese, and English in one character code.
TC/SC Additional Fonts Kit	Supports Chinese fonts.
Scanner Kit	Adds the Scan feature to the machine.
Searchable PDF Kit	Allows you to use optical character recognition (OCR) when scanning. **Note** • The optional Scanner Kit is required to use this feature for some models.

Product Name	Description
High Compression Image Kit	Allows you to create high-compressed DocuWorks or PDF files for E-mail or Scan to PC feature. **Note** • The optional Scanner Kit is required to use this feature for some models.
USB Memory Kit	Directly stores data in a USB memory device when scanning. Also, allows you to print image data taken with a digital camera as well as data stored with the text format, using the control panel. **Note** • The optional Scanner Kit is required to use this feature for some models.
Fax Kit 3	Adds the Fax and Internet Fax feature to the machine.
FAX Extension Board Kit 3	Adds extra facsimile lines to the machine.
Additional G3 Port 3	Adds an additional G3 port to the machine that offers the Fax feature.
IP Fax [SIP] Kit	Adds the IP Fax (SIP) feature to the machine.
Stamp Kit	Stamps on a document scanned with Duplex Automatic Document Feeder to send as a fax.
Server Fax Kit	Adds the Server Fax feature to the machine.
Copy Management Expansion Kit	Prints dates or serial numbers on all the pages of confidential documents to restrict duplication. **Note** • The optional HDD Extension Kit is required to use this feature for some models.
Network Accounting Kit	Allows you to keep track of user accounts via an external authentication server. **Note** • The optional HDD Extension Kit is required to use this feature for some models.
Anti Earthquake Kit	Prevents the machine from being moved by an earthquake.
Manual Holder	A holder to keep the machine's guides.
Embedded IC Card Reader A	A built-in IC Card Reader, which can read data in a smart card. **Reference** • For details on this option, refer to "Configuration for IC Card Reader (Optional)" (P.444).
Embedded IC Card Reader A for Wing Table	An built-in IC Card Reader for Wing Table, which can read data in a smart card. **Note** • For details on this option, refer to "Configuration for IC Card Reader (Optional)" (P.444).
Embedded IC Card Reader	A built-in IC Card Reader, which can read data in a smart card. **Note** • For details on this option, refer to "Configuration for IC Card Reader (Optional)" (P.444).

Product Name	Description
Embedded IC Card Reader for Wing Table	An built-in IC Card Reader for Wing Table, which can read data in a smart card. **Note** • For details on this option, refer to "Configuration for IC Card Reader (Optional)" (P.444).
Attention Light II	Tells you the status of the machine such as malfunction, printing, or faxing status.
Voice Guidance 2	Allows you to operate the machine using the numeric keypad, following the the voice guidance. **Note** • The optional HDD Extension Kit is required to use this feature for some models.

*: When using 80-gsm paper.

Note

- The optional components are subject to change without notice.
- For the latest information, contact our Customer Support Center.

Adjust Image Transfer

This section describes how to adjust the transfer output value.

You can specify the transfer output value manually or by scanning the sample printout. This is useful when the toner image does not transfer to the paper properly.

Adjusting the Transfer Output Value

You can specify the image transfer output value for each paper type.

Adjusting the transfer output value manually

1 Press the <Log In/Out> button and enter the System Administration mode.

Reference

- For how to enter the System Administration mode, refer to "System Settings Procedure" (P.138).

2 Select [Tools] on the Services Home screen.

3 Select [System Settings] > [Common Service Settings] > [Maintenance].

4 Select [Adjust Image Transfer].

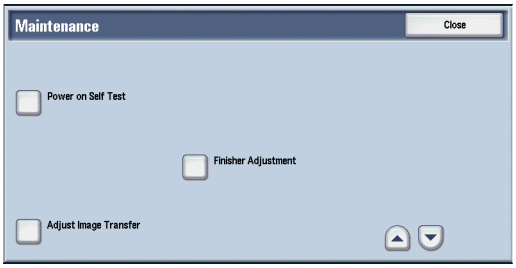

5 Select [Paper Type].

6 Select the paper type, and then select [Close].

7 Select [Print Sample].

8 Select the paper size, load paper of that size in Tray 5 (Bypass), and then select [1 Sided] or [2 Sided].

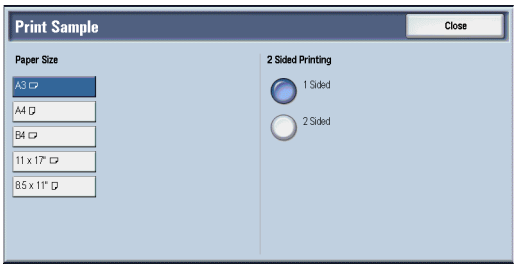

9 Press the <Start> button.

The print sample will be printed.

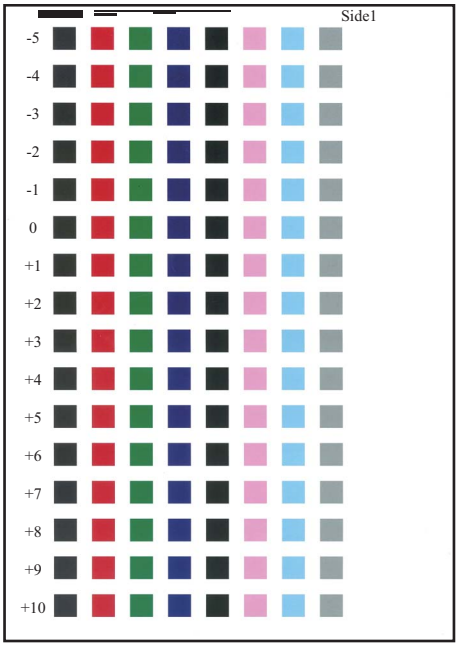

Note

- "Side 1" will be printed on the top right of the Side 1 sample, and "Side 2" will be printed on the top right of the Side 2 sample.
- When the paper size is A4, B4, or 8.5 X 11", the sample will be printed on two sheets.

10 Check the print sample, and take a note of the value (-5 to +10) printed on the left side of the most-successfully printed row.

Note

- When [2 Sided] is selected, do the same for both the Side 1 sample and the Side 2 sample.

11 Enter the [Side 1] and the [Side 2] values you selected in step 10.

12 Select [Adjust].

The specified transfer output values will be applied when the paper type of the job is the same as the paper type selected in step 7.

13 Select [Close].

Adjusting the transfer output value by scanning the sample printout

1 Press the <Log In/Out> button and enter the System Administration mode.

Reference

- For how to enter the System Administration mode, refer to "System Settings Procedure" (P.138).

2 Select [Tools] on the Services Home screen.

3 Select [System Settings] > [Common Service Settings] > [Maintenance].

4 Select [Adjust Image Transfer].

5 Select [Paper Type].

6 Select the paper type, and then select [Close].

7 Select [Print Sample].

8 Select the paper size, load paper of that size in Tray 5 (Bypass), and then select [1 Sided] or [2 Sided].

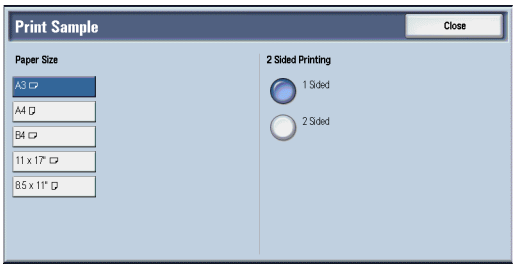

9 Press the <Start> button.

The print sample will be printed.

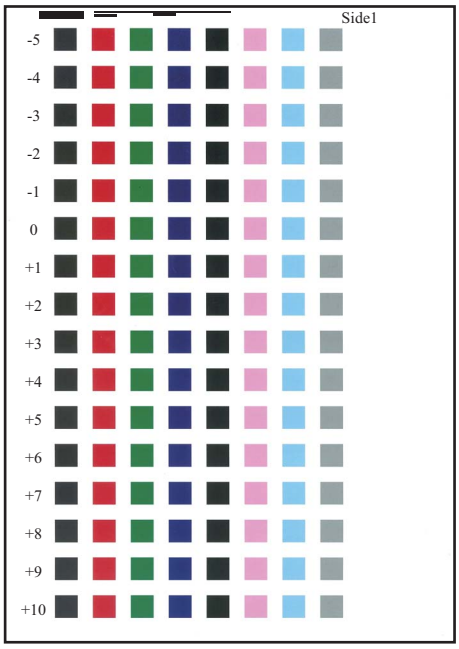

Note

- "Side 1" will be printed on the top right of the Side 1 sample, and "Side 2" will be printed on the top right of the Side 2 sample.
- When the paper size is A4, B4, or 8.5 X 11", the sample will be printed on two sheets.

10 Select [Scan Calibration Chart].

11 Set the print sample on the document glass as shown in the screen.

12 Place five or more blank sheets of the same size as the print sample over the print sample. Then close the document cover and select [Start]. After the print sample is completely scanned, remove the print sample and the blank sheets. When the sample is printed on both sides of the sheet, perform steps 11 and 12 for each side of the sample printout.

Note

- The number of times you need to scan the print sample depends on the number of pages of the print sample and whether it is 1 sided or 2 sided.
  - Once for 1 page and 1 sided
  - Twice for 1 page and 2 sided
  - Twice for 2 pages and 1 sided
  - 4 times for 2 pages and 2 sided
- [Start] is displayed after the first scanning is completed. Make sure to select [Start] after scanning all the printouts.
- Selecting [Start] with an insufficient number of scanning will cause an abnormal end of the adjustment in the next step.
- Any print sample can be scanned up to four times regardless of how many times it needs to be scanned. If the required number of scanning times is exceeded, the transfer output value is adjusted based on only the later samples required.
- When scanning a print sample which needs to be scanned twice or more, make sure to scan all the printouts. If you scan a print sample together with another print sample printed after 24 hours or more from the preceding sample printing, only the later sample will be used for adjustment.

13 After scanning has been completed, select [Start].

Note

- The message "Adjustment has been completed." is displayed when the adjustment process is completed normally.

14 Recommendable adjustment setting (sample number) is displayed on [Side 1] and [Side 2].

15 Select [Adjust].

The specified transfer output values will be applied.

16 Select [Close].

ESC/P-K Emulation

This section describes how to use ESC/P-K emulation.

Emulation

This section describes the printer language emulations available on the machine.

Print data conforms to certain rules (grammars). These rules (grammars) are called printer languages.

The machine supports two types of printer languages: a page description language,which is used to create images on a page-by-page basis, and an emulation, which is used to achieve the print results similar to those of other printers. To "emulate" means to imitate the print results of other printers.

Emulation Mode

When printing data written in a language other than a page description language supported by the machine, switch the machine to the emulation mode. The relationships between the emulation mode and the printer to be emulated are as follows:

Emulation Mode	Printer to be Emulated
ESC/P-K emulation mode (ESC/P-K mode)	LQ1900K II+

Host Interfaces and Emulation

Different host interfaces support different printer languages. The host interfaces that support printer languages are as follows:

- USB port
- LPD port
- SMB port
- IPP port
- Port 9100 port
- WSD port

Switching between Printer Languages

The machine provides the Multi-emulation feature that allows switching between different printer languages.

The methods of switching between printer languages are as follows:

■ Switching by Commands

Commands for switching between printer languages are provided. Upon receipt of a command, the machine switches to the relevant printer language.

■ Interface-dependent

You can set a printer language for each host interface by using CentreWare Internet Services. The machine switches to a printer language corresponding to the host interface that received data.

Output Feature

This section describes the machine's output feature.

Outputting a Pending Print Job

The printing of jobs already received by the machine can be prioritized over other jobs.

Reference

- For information on prioritizing the printing of jobs already received by the machine, refer to "Job Status" > "Printing Pending Jobs" in the User Guide.

ESC/P-K Emulation Print Features

Pages per Side

The Pages per Side feature reduces the size of multiple-sheet documents and prints them on a single sheet of paper.

The Pages per Side feature can be used in the ESC/P-K emulation mode. In the ESC/P-K mode, 2 Up can be used.

Form Overlay

In the ESC/P-K mode, you can register an original form on the machine, and overprint the form on a printout.

The form to be used for overlaying can be specified on the control panel.

Reference

- For more information on registering forms, contact our Customer Support Center.

Forms

You can use ESC/P-K to register forms on the machine. Up to 64 forms can be registered.

Reference

- For more information on registering forms, contact our Customer Support Center.

ESC/P-K Emulation Settings

The following tables show the basic and extended settings that can be configured onthe ESC/P-K emulation mode menu.

Basic Settings

The following tables show the basic and extended settings that can be configured onthe ESC/P-K emulation mode menu.

Setting Item	Item Number	Value
Output color	5	Sets the output color. [0] (Default): Color [1]: Monochrome

Paper tray	3	Sets the paper tray to be used for printing. [0]: Auto [1] (Default): Tray 1 [2]: Tray 2 [3]: Tray 3 [4]: Tray 4 [5]: Tray 5 If printing from Tray 5, instruct printing and then operate the machine to start printing. To cancel the setting, change the setting for "Tray 5Confirmation". **Important** • When Trays 1 to 4 is selected, the paper size is determined by the size of paper loaded in the tray, and thus [Paper Size] cannot be set. **Note** • When [Auto] is selected and paper of the same size in the same orientation is loaded in multiple trays, paper will be fed in the order of Tray 1 → Tray 2 → Tray 3 → Tray 4. If paper of the same size is loaded in multiple trays but in different orientations, feeding of the paper loaded in the landscape orientation is prioritized.
Document size	1	Sets the client-created document size. [99](Default):Paper [100]: Continuous form paper(10X12) [101]: Continuous form paper(10X11) [102]: Continuous form paper(15X12) [103]: Continuous form paper(15X11) [3]: A3 [4]: A4 [5]: A5 [14]: B4 [15]: B5 [21]: 8.5X14 [22]: 8.5X13 [23]: 8.5X11 [24]: 11X17 [0]: Postcard The number of characters printed is: 80 characters/72 rows for continuous form paper (10 x 12), 80 characters/66 rows for continuous form paper (10 x 11), 136 characters/72 rows for continuous form paper (15 x 12), and 136 characters/66 rows for continuous form paper (15 x 11). **Note** • When a continuous form paper is selected for [Original Size], [Paper Position] cannot be set. • When [Preset %] or [Fit to Cut Sheet] is selected for [Reduce/Enlarge], the machine automatically calculates the magnification based on a combination of [Original Size] and [Paper Size]. If the ratio, however, is outside the range of 45-210%, the document will not be reduced/ enlarged, and will be printed at a scale of 100%. When [2 Up] is selected, the machine automatically calculates the magnification based on a combination of [Original Size] and 1/2 of [Paper Size]. • The orientation set here is that of the document. It is not affected by the orientation of paper loaded in the paper trays.
Orientation	19	Sets the orientation of paper. [0] (Default): Portrait [1]: Landscape

Paper size	2	Sets the size of paper to be printed. This setting can be made only when [Paper Tray] is set to [Auto] or [Tray 5]. This setting can be configured only for cut sheets. [3]: A3 [4]: A4 [5]: A5 [14]: B4 [15]: B5 [21]: 8.5X14 [22]: 8.5X13 [23]: 8.5X11 [24]: 11X17 [0]: Postcard **Note** • When [Preset %] or [Fit to Cut Sheet] is selected for [Reduce/Enlarge], the machine automatically calculates the magnification based on a combination of [Original Size] and [Paper Size]. If the magnification, however, is outside the range of 45-210 %, the document will not be reduced/enlarged, and will be printed at a scale of 100 %. When [2 Up] is selected, the machine automatically calculates the magnification based on a combination of [Original Size] and 1/2 of [Paper Size].

Extended Settings

Setting Item	Item Number	Value
Paper position	20	Sets the paper position. [0]](Default): Without cut sheet feeder(left) [1]: With cut sheet feeder(center)
Output quantity	8	Sets the number of copies to be printed. [1 to 250](Default:1):1-250 copies **Important** • When the output quantity is specified by a client, that number of copies is printed. After printing, the number set on the control panel is overwritten with the number newly specified. However, the number of copies specified from the lpd port will not overwrite the number set on the control panel.
Reduce/Enlarge	54 (Reduce/ Enlarge mode)	Sets the print magnification. [0](Default): Preset % [1]: Variable % [2]: Fit to Cut Sheet [Preset %] is a magnification automatically calculated based on [Original Size] and [Paper Size], and reduces/enlarges the printable area of the document to fit in the printable area of the output paper. Therefore, when the size of the document of the output paper are the same, the ratio will be 100 %. Also, if [2 Up] is selected, the document will be reduced to the size at which two pages fit onto one sheet of paper. [Variable %] is a magnification set in [Variable %] under [Reduce/ Enlarge]. A reference point for scaling (reducing/enlarging) is the upper left corner of the printable area. This reference point applies to all text, images, and graphics. [Fit to Cut Sheet] prints the entire cut sheet area onto the printable area of the output paper. It is a magnification automatically calculated based on [Original Size] and [Paper Size], and reduces/enlarges the entire document (including the area outside of the printable area) to fit onto the printable area of the output paper.

Setting Item	Item Number	Value
Reduce/Enlarge	17 (Variable %/ vertical magnification)	Sets the magnification for the vertical or horizontal direction. [45 to 210](Default:100): 45-210 % **Note** • When a continuous form paper is selected for [Original Size], print result is identical for [Preset %] and [Fit to Cut Sheet].
	18 (Variable %/ horizontal magnification)	
2 Up mode	21	2Sets whether to print with the 2 Up or page by page. 2 Up is a feature that prints two pages onto one sheet of paper. Depending on the paper orientation, the two pages are printed side by side, or one above the other. [0](Default): Off [1]: Forward [2]: Reverse **Important** • When [Landscape] is selected for [Original Size], print result is identical for [Forward] and [Reverse].
Output destinatio	9	Sets the output tray for the printouts. [0](Default):Center Tray or Center Tray - Lower [1]: Left Top Tray (optional) [2]: Center Tray - Upper [80]: Right Middle Tray (optional)
Tray 5 confirmation	67	Prints from Tray 5, after you instruct to print and then operate the machine to start printing. [0](Default): Off [1]: On
Grid lines	22	Sets the method for printing double-byte grid lines. The options are as follows. [0](Default): Image [1]: Font
2 Sided printing	12	Sets the 2 sided printing. [0](Default): Off [1]: Head to Head [2]: Head to Toe **Important** • When [Postcard] is selected for [Paper Size], [Head to Head] and [Head to Toe] cannot be selected.
Font	13 (Chinese character fonts)	Sets the font for double-byte characters. [3](Default): ShuSong [4]: FangSong (optional) [5]: HeiTi (optional) [6]: KaiTi (optional)
	14 (Alphanumeric fonts)	Sets the font for single-byte characters. [0](Default): Roman [1]: Sanserif **Important** • Since this feature selects the default value, its setting will not be affected when an extended command is received.

Setting Item	Item Number	Value
Print control	50 (Chinese character codes)	Sets the code for double-byte characters. [2](Default): GB18030 [3]: BIG5
	51 (Blank sheet output)	Sets whether to print blank pages if included in the document. [0](Default): Off [1]: On **Note** • Even when [Off] is selected, blank pages are printed if they are spaces created with user-defined characters or images in white color. • When [Off] is selected for this feature and 2 Up or 2 sided printing is specified, blank pages are not printed.
	52 (Character print area)	Extends the position of the right margin. [0](Default): Standard [1]: Extended **Important** • Changing the character print area from [Extended] to [Standard] restores the left and right margins to the default values. • When the position of the right margin is set here, that position becomes the right edge of the character print area.
	53 (Image enhancement)	Sets whether or not to enable the Image Enhancement feature. Image Enhancement smoothens the border between black and white,reducing rough edges, and thus seemingly increasing the resolution. [0]: Off [1](Default): On
ESCP switch	55 (Text quality)	Sets the Text Quality mode to high quality or draft. [0](Default): High Quality [1]: Draft **Important** • Since the default value is selected for the [Text Quality], [Reduced Characters], [Character Code Table], [Page Length], and [1-inch Perforation Skip] features, their settings will not be affected when an extended command is received. **Note** • Changing settings does not change actual printing quality. • This setting affect the Text Quality selection commands. For more information on the Text Quality selection commands, contact our Customer Support Center.
	56 (Reduced characters)	Reduces the size of single-byte alphanumeric characters when printing.Sets whether to reduce their sizes or to print them at a scale of 100 %. [0](Default): Off [1]: On
	57 (Charactercode table)	Sets the character code table for double-byte characters. [1](Default): Extended Graphic [2]: Slant
	58 (Page length)	Sets the length of a page (printable area) to 11 inches or 12 inches. [0](Default): 11 inches [1]: 12 inches
	59 (1-Inch perforation skip)	Sets whether or not to leave a 1-inch space between pages. [0](Default): Off [1]: On **Important** • This is effective only when CSF under [Paper Position] is set to [Off].

Setting Item	Item Number	Value
ESCP switch	60 (Paper feed position)	Sets the position to start printing at 8.5 mm or 22 mm below the top edge of paper. [0](Default): 8.5mm [1]: 22mm
	61 (CR feature)	Sets the action to be executed when a CR command is received. [0](Default): Carriage return [1]: Carriage return and linefeed
Position adjustment	15 (Vertical position adjustment)	Adjusts the printing position vertically or horizontally, and changes the positions of the margins. [0](Default): Off [1-500]: -250 to +250 mm **Important** • Data outside the printable area is not printed regardless of the adjustment of the print position. In addition, data moved outside the printable area as a result of adjusting the print position is not printed.
	16 (Horizontal position adjustment)	
Escape sequence	62 (Escape sequence)	A normal extended command is specified starting with hexadecimal 1BH ESC as the escape sequence identifying the command, followed by ; (3BH). When you cannot use a semicolon or ESC code with the host computer, you can use a special string instead as an escape sequence. This setting specifies whether or not to enable the escape sequence replacement feature. When enabling, specify the escape sequence with item 63. [0](Default): Disabled [1]: Enabled **Note** • For more information on extended commands, contact our Customer Support Center.
	63 (Escape sequence character)	To control an extended command with a text code, you must specify an escape sequence (the first two bytes) of the extended command.Enter two characters using the keyboard displayed on the screen. [&%](Default) : 0x21 - 0x7e
Form overlay	64	Constantly performs Form Overlay by selecting a form name (No. 01-64) registered on the machine. [0](Default) : Off [1-64]: No. 1 - No. 64 **Important** • Since the default value is selected for this feature, this setting is not affected when an extended commend is received. • Once a form name is selected, it continues to be displayed even if the form is deleted. When a form name is selected using the up and down arrow keys, it is not displayed. In this case, the setting is set to "Off".
Stapling	66	Sets the stapling position. [0](Default) :Off [1]: Top left [2]: Top Double [3]: Top Right [4]: Left Double [5]: Right Double [6]: Bottom Left [7]: Bottom Double [8]: Bottom Right
Bypass Tray -Wait User	67	Sets whether to suspend the print processing when feeding paper from the Bypass Tray. Processing is resumed by a user operation on the machine. [0]: Off [1](Default): On

Setting Item	Item Number	Value
Form Type	68	Sets the form type. [0](Default) :ESC/P-K
Punching	69	Select the position for punching holes. [0](Default): Off [1]: Top [2]: Bottom [3]: Left [4]: Right
Number of holes	70	Select the number of punch holes. [0](Default): 2 holes [1]: 3 holes [2]: 4 holes
Binary character strings	72	Sets the character strings to be specified when entering commands in hexadecimal format. [0](Default): OFF [1]: &$ % $ [2]: $?!#
0 Style	73	Sets the typeface for "0". [0](Default): 0 [1]: Ø
Number of sets	74	Sets the method of specifying the number of print sets. [0]: Protocol [1]: Panel [2](Default): Command

Magnification Table

Preset %

Document Size	Paper Size	A3	A4	A5	B4	B5	11 x 17"	8.5 x 14"	8.5 x 13"	8.5 x 11"	Postcard
A3	Long edge	100	70	49	86	60	103	84	78	66	100
	Short edge	100	70	48	86	60	94	72	72	72	100
A4	Long edge	143	100	70	123	86	147	120	112	94	48
	Short edge	143	100	69	123	86	135	103	103	103	45
A5	Long edge	204	143	100	177	123	210	172	160	135	69
	Short edge	207	145	100	178	124	195	149	149	149	65
B4	Long edge	116	81	57	100	70	119	98	90	76	100
	Short edge	116	81	56	100	70	109	83	83	83	100
B5	Long edge	164	116	81	143	100	171	140	130	109	56
	Short edge	164	116	81	143	100	156	120	120	120	53
11 x 17"	Long edge	97	68	48	84	59	100	82	76	64	100
	Short edge	106	74	51	92	64	100	77	77	77	100
8.5 x 14"	Long edge	119	83	58	102	72	122	100	93	78	100
	Short edge	139	97	67	120	84	131	100	100	100	100
8.5 x 13"	Long edge	128	90	63	111	77	132	108	100	84	100
	Short edge	139	97	67	120	84	131	100	100	100	100
8.5 x 11"	Long edge	152	106	74	131	92	156	128	119	100	100
	Short edge	139	97	67	120	84	131	100	100	100	100
Postcard	Long edge	100	100	145	100	178	100	100	100	100	100
	Short edge	100	100	153	100	190	100	100	100	100	100
15 x 11"	Long edge	119	83	58	103	72	122	100	93	78	100

Document Size	Paper Size	A3	A4	A5	B4	B5	11 x 17"	8.5 x 14"	8.5 x 13"	8.5 x 11"	Postcard
	Short edge	103	72	50	89	62	97	74	74	74	100
15 x 12"	Long edge	119	83	58	103	72	122	100	93	78	100
	Short edge	95	66	46	81	57	89	68	68	68	100
10 x 11"	Long edge	147	103	72	127	89	151	124	115	97	50
	Short edge	142	99	68	122	85	133	102	102	102	45
10 x 12"	Long edge	135	95	66	117	81	139	114	105	89	46
	Short edge	142	99	68	122	85	133	102	102	102	45

Unit:[%]

Note

- If the magnification for either the long edge or short edge is outside the range of 45 - 210%, the magnifications for both the long edge and short edge becomes 100%.

Preset % (2-Up Printing)

Document Size	Paper Size	A3/2	A4/2	A5/2	B4/2	B5/2	11 x 17"/2	8.5 x 14"/2	8.5 x 13"/2	8.5 x 11"/2	Postcard/2
A3	Long edge	70	49	100	60	100	66	50	50	50	100
	Short edge	70	48	100	60	100	72	59	54	45	100
A4	Long edge	100	70	48	86	60	94	72	72	72	100
	Short edge	100	69	48	86	59	103	84	78	65	100
A5	Long edge	143	100	69	123	86	135	103	103	103	45
	Short edge	145	100	69	124	86	149	121	112	94	47
B4	Long edge	81	57	100	70	49	76	58	58	58	100
	Short edge	81	56	100	70	48	83	68	63	53	100
B5	Long edge	116	81	56	100	70	109	83	83	83	100
	Short edge	116	80	55	100	69	120	98	90	76	100
11 x 17"	Long edge	68	48	100	59	100	64	49	49	49	100
	Short edge	74	51	100	64	100	77	62	58	48	100
8.5 x 14"	Long edge	83	58	100	72	50	78	60	60	60	100
	Short edge	97	67	100	84	57	100	82	75	63	100
8.5 x 13"	Long edge	90	63	100	77	54	84	64	64	64	100
	Short edge	97	67	100	84	57	100	82	75	63	100
8.5 x 11"	Long edge	106	74	51	92	64	100	77	77	77	100
	Short edge	97	67	46	84	57	100	82	75	63	100
Postcard	Long edge	100	145	100	178	124	100	149	149	149	65
	Short edge	100	153	105	190	131	100	185	172	144	71
15 x 11"	Long edge	83	58	100	72	100	78	60	60	60	100
	Short edge	72	50	100	62	100	74	60	56	47	100

Document Size	Paper Size	A3/2	A4/2	A5/2	B4/2	B5/2	11 x 17"/2	8.5 x 14"/2	8.5 x 13"/2	8.5 x 11"/2	Postcard/2
15 x 12"	Long edge	83	58	100	72	100	78	60	60	100	100
	Short edge	66	46	100	57	100	68	55	51	100	100
10 x 11"	Long edge	103	72	50	89	62	97	74	74	74	100
	Short edge	99	68	47	85	59	102	83	77	64	100
10 x 12"	Long edge	95	66	46	81	57	89	68	68	68	100
	Short edge	99	68	47	85	59	102	83	77	64	100

Unit:[%]

Note

- If the magnification for either the long edge or short edge is outside the range of 45 - 210%, the magnifications for both the long edge and short edge becomes 100%.

Fit to Cut Sheet

Document Size	Paper Size	A3	A4	A5	B4	B5	11 x 17"	8.5 x 14"	8.5 x 13"	8.5 x 11"	Postcard
A3	Long edge	98	69	48	85	59	101	83	77	64	100
	Short edge	97	68	47	84	58	91	70	70	70	100
A4	Long edge	138	97	68	120	84	142	117	108	91	100
	Short edge	137	96	66	118	82	129	99	99	99	100
A5	Long edge	196	137	96	169	118	201	165	153	129	66
	Short edge	195	136	94	168	117	183	140	140	140	62
B4	Long edge	113	79	55	98	68	116	95	88	74	100
	Short edge	112	78	54	97	67	105	81	81	81	100
B5	Long edge	160	112	78	138	97	165	135	125	105	54
	Short edge	158	110	76	136	95	149	114	114	114	50
11 x 17"	Long edge	95	67	47	82	57	98	80	74	63	100
	Short edge	103	72	50	89	62	97	74	74	74	100
8.5 x 14"	Long edge	116	81	57	100	70	119	98	90	76	100
	Short edge	133	93	64	115	80	125	96	96	96	100
8.5 x 13"	Long edge	125	87	61	108	75	128	105	97	82	100
	Short edge	133	93	64	115	80	125	96	96	96	100
8.5 x 11"	Long edge	147	103	72	127	89	151	124	115	97	100
	Short edge	133	93	64	115	80	125	96	96	96	100
Postcard	Long edge	100	195	136	100	168	100	100	100	183	94
	Short edge	100	201	139	100	173	100	100	100	207	91
15 x 11"	Long edge	135	95	66	117	81	139	105	114	89	46
	Short edge	142	99	68	122	85	133	102	102	102	45

Document Size	Paper Size	A3	A4	A5	B4	B5	11 x 17"	8.5 x 14"	8.5 x 13"	8.5 x 11"	Postcard
15 x 12"	Long edge	135	95	66	117	81	139	105	114	89	46
	Short edge	142	99	68	122	85	133	102	102	102	45
10 x 11"	Long edge	147	103	72	127	89	151	115	124	97	50
	Short edge	142	99	68	122	85	133	102	102	102	45
10 x 12"	Long edge	147	103	72	127	89	151	124	115	97	50
	Short edge	142	99	68	122	85	133	102	102	102	45

Unit:[%]

Note

- If the magnification for either the long edge or short edge is outside the range of 45 - 210%, the magnifications for both the long edge and short edge becomes 100%.

Fit to Cut Sheet (When 2 Up is specified)

Document Size	Paper Size	A3/2	A4/2	A5/2	B4/2	B5/2	11 x 17"/2	8.5 x 14"/2	8.5 x 13"/2	8.5 x 11"/2	Postcard/2
A3	Long edge	69	48	100	59	100	64	49	49	100	100
	Short edge	68	47	100	58	100	70	57	53	100	100
A4	Long edge	97	68	47	84	58	91	70	70	70	100
	Short edge	96	66	46	82	57	99	80	74	62	100
A5	Long edge	137	96	66	118	82	129	99	99	99	100
	Short edge	136	84	65	117	80	140	114	106	88	100
B4	Long edge	79	55	100	68	48	74	57	57	57	100
	Short edge	78	54	100	67	46	81	66	61	51	100
B5	Long edge	112	78	54	97	67	105	81	81	81	100
	Short edge	110	76	53	95	65	114	93	86	72	100
11 x 17"	Long edge	67	47	100	57	100	63	48	48	48	100
	Short edge	72	50	100	62	100	74	60	56	47	100
8.5 x 14"	Long edge	81	47	100	70	49	76	58	58	58	100
	Short edge	93	50	100	80	55	96	78	72	61	100
8.5 x 13"	Long edge	87	61	100	75	52	82	63	63	63	100
	Short edge	93	64	100	80	55	96	78	72	61	100
8.5 x 11"	Long edge	103	89	100	89	72	97	74	74	74	100
	Short edge	93	80	100	80	55	96	78	72	61	100
Postcard	Long edge	195	136	94	168	117	183	140	140	140	62
	Short edge	201	139	96	173	119	207	169	156	131	65
15 x 11"	Long edge	95	66	46	81	57	89	68	68	68	100
	Short edge	99	68	47	85	59	102	83	77	64	100

Document Size	Paper Size	A3/2	A4/2	A5/2	B4/2	B5/2	11 x 17"/2	8.5 x 14"/2	8.5 x 13"/2	8.5 x 11"/2	Postcard/2
15 x 12"	Long edge	95	66	46	81	57	89	68	68	68	100
	Short edge	99	68	47	85	59	102	83	77	64	100
10 x 11"	Long edge	103	72	50	89	62	97	74	74	74	100
	Short edge	99	68	47	85	59	102	83	77	64	100
10 x 12"	Long edge	103	72	50	89	62	97	74	74	74	100
	Short edge	99	68	47	85	59	102	83	77	64	100

Unit:[%]

Note

- If the magnification for either the long edge or short edge is outside the range of 45 - 210%, the magnifications for both the long edge and short edge becomes 100%.

Paper Size and Number of Printable Characters

When the paper feed position is 22 mm

Paper Size	Portrait		Landscape	
	Characters	Lines	Characters	Lines
A3	113	92	161	63
B4	97	78	139	53
A4	79	63	113	42
B5	68	53	97	35
A5	54	42	79	27
Postcard	35	30	54	19
11 x 17"	106	94	166	58
8.5 x 14"	81	76	136	43
8.5 x 13"	81	70	126	43
8.5 x 11"	81	58	106	43

When the paper feed position is 8.5 mm

Paper Size	Portrait		Landscape	
	Characters	Lines	Characters	Lines
A3	113	95	161	66
B4	97	82	139	56
A4	79	66	113	45
B5	68	56	97	39
A5	54	45	79	31
Postcard	35	30	54	19
11 x 17"	106	98	166	62
8.5 x 14"	81	80	136	47
8.5 x 13"	81	74	126	47
8.5 x 11"	81	62	106	47

Note

- The values are based on 10-cpi character pitch and 6-lpi line pitch.
- The magnification for both the long edge and short edge is 100%.
- Some paper sizes may not be available depending on your hardware configuration.

Fit to Cut Sheet

Paper Size	Portrait		Landscape	
	Characters	Lines	Characters	Lines
A3	116	99	165	70
B4	101	85	143	60
A4	82	70	116	49
B5	71	60	101	42
A5	58	49	82	34
Postcard	39	34	58	23
11 x 17"	110	102	170	66
8.5 x 14"	85	84	140	51
8.5 x 13"	85	78	130	51
8.5 x 11"	85	66	110	51

Note

- The values are based on 10-cpi character pitch and 6-lpi line pitch.
- Some paper sizes may not be available depending on your hardware configuration.

15-inch Continuous Form Mode (When Aligned at Left in Landscape Orientation)

Paper Size	Portrait		Landscape	
	Characters	Lines	Characters	Lines
All supported paper sizes	136	66	136	72

Note

- The values are based on 10-cpi character pitch and 6-lpi line pitch.

10-inch Continuous Form Mode

Paper Size	Portrait		Landscape	
	Characters	Lines	Characters	Lines
All supported paper sizes	80	66	80	72

PDF Direct Print

PDF Direct Print is a feature that prints PDF files by directly using the lpr command instead of a print driver. When this feature is used, the following items will be printed based on the settings of [PDF] under [Print Mode].

- Output Quantity
- 2 Sided Printing
- Print Mode
- Collate
- Layout
- Paper Size
- Output Color
- Print Processing Mode

Important

- You cannot print DocuWorks files with Japanese fonts used.

Note

- Two types of the PDF Direct Printing methods are available: the genuine Adobe PDF Direct Print and the non-PostScript PDF Direct Print (PDF Bridge). You can select which method to prioritize in the System Administration mode.
- When you use the lpr command to print, specify the number of copies to be printed in the lpr command. The copy quantity setting made on [Output Quantity] under [PDF] becomes invalid. If the copy quantity is not specified in the lpr command, only one copy is printed.
- Before you print PDF file using the lpr command, the LPD protocol of the machine must be started with the control panel or CentreWare Internet Services.
- PDF Direct Print supports PDF version 1.6.

PDF Direct Print Settings

This section describes the available settings with the PDF Direct Print feature.

The settings configured here are valid when printing PDF files without using ContentsBridge provided by Fuji Xerox.

Note

- For information on printing PDF files using ContentsBridge Utility, refer to the manual provided on the Media (Software/Product Manual).

Setting Item	Item Number	Value
Output quantity	401	Sets the number of copies to be printed. [1-999] (Default: 1) : 1-999 sheets
2 sided printing	402	Sets the 2 sided printing option. [0] (Default) : 1 Sided [1]: 2 Sided, Flip on Long Edge [2]: 2 Sided, Flip on Short Edge [2 Sided Print, Flip on Long Edge] prints 2 sided in the orientation so that pages can be bound along the long edge. [2 Sided Print, Flip on Short Edge] prints 2 sided in the orientation so that pages can be bound along the short edge.
Print mode	403	Selects which you prioritize: image quality or print speed. [0] (Default): Standard [1]: High Speed [2]: Fine The [Standard] setting prints in a standard speed and quality. The [High Speed] setting prioritize the print speed. The [Fine] quality setting prints in high quality but in a slower speed.

Setting Item	Item Number	Value
Collate	404	Selects whether to print multiple-sheet documents as collated sets (1, 2, 3...1, 2, 3...). [0] (Default): Off [1]: On
Layout	405	Sets the layout for printing. **Note** • This item can be set when [PDF Bridge] is selected for [Process Mode]. [0] (Default) : Auto % [1]: Booklet [2]: 2-up [3]: 4-up [4]: 100 % (size-by-size) The [Auto %] setting automatically calculates the largest magnification possible to fit to the output paper size. The [Booklet] setting prints the images side by side, on both sides of each page, in the correct order to make a booklet based on the layout of the original PDF file. Some documents may not be printed in a booklet fashion depending on the structure of their pages. In this case, they will be printed with the [Auto %] setting. **Note** • When [A4] is selected for [Paper Size], documents will be printed on A4 size paper. • When [Paper Size] is set to [Auto], documents will be printed on A3 or A4 size paper. The [2-up] setting prints two pages onto one sheet of paper. When [2-Up] is selected, the paper size is fixed at A4. The [4-up] setting prints four pages on each sheet of paper. When [4-Up] is selected, the paper size is fixed at A4.
Paper size	406	Sets the size of the paper to be printed. [0] (Default) : Auto [1]: A4 The [Auto] setting automatically determines the paper size, based on the size and settings of a PDF file to be printed.
Output color	407	Sets whether to print in color or monochrome. [0] (Default) : Auto [1]: Black The [Auto] setting automatically determines the output color: color or monochrome for each page. If colors other than black and white are used on the original, the machine prints the document in color, and if only black and white are used on the original, the machine prints in monochrome.
Process mode	408	Sets the print processing mode when you use the PDF Direct Print feature. [0](Default): PDF Bridge [1]: PS [PDF Bridge] processes PDF files using the PDF Direct Print feature provided by Fuji Xerox. [PS] processes PDF files using the PostScript feature provided by Adobe. **Note** • This item is displayed when the Adobe PostScript 3 Kit (optional) is installed. • The print results may differ between the [PDF Bridge] and [PS] selections. • When [PS] is selected, the [Layout] setting becomes invalid.

DocuWorks Direct Print

DocuWorks Direct Print is a feature that prints DocuWorks files by using the lpr command directly instead of a print driver. When this feature is used, the following items will be printed based on the settings of [DocuWorks] under [Print Mode].

- Output Quantity
- 2 Sided Printing
- Print Mode
- Collate
- Layout
- Paper Size
- Output Color

Important

- You cannot print DocuWorks files with Japanese fonts used.

Note

- When you use the lpr command to print, specify the number of copies to be printed in the lpr command. The copy quantity setting made on [Output Quantity] under [DocuWorks] becomes invalid. If the copy quantity is not specified in the lpr command, only one copy is printed.
- Before you print DocuWorks file using the lpr command, the LPD protocol of the machine must be started with the control panel or CentreWare Internet Services.

DocuWorks Direct Print Settings

This section describes the available settings with the DocuWorks Direct Print feature.

The settings configured here are valid when printing DocuWorks files without using ContentsBridge provided by Fuji Xerox.

Note

- For information on printing DocuWorks files using ContentsBridge Utility, refer to the manual provided on the Media (Software/Product Manual).

Setting Item	Item Number	Value
Output quantity	501	Sets the number of copies to be printed. [1-999] (Default: 1): 1-999 sheets
2 sided printing	502	Sets the 2 sided printing option. [0](Default): 1 Sided [1]: 2 Sided, Flip on Long Edge [2]: 2 Sided, Flip on Short Edge [2 Sided Print, Flip on Long Edge] prints 2 sided in the orientation so that pages can be bound along the long edge. [2 Sided Print, Flip on Short Edge] prints 2 sided in the orientation so that pages can be bound along the short edge.
Print mode	503	Selects which you prioritize: image quality or print speed. [0] (Default) : Standard [1]: High Speed [2]: Fine The [Standard] setting prints in a standard speed and quality. The [High Speed] setting prioritize the print speed. The [Fine] quality setting prints in high quality but in a slower speed.
Collate	504	Selects whether to print multiple-sheet documents as collated sets (1, 2, 3...1, 2, 3...). [0](Default) :Off [1]: On

Setting Item	Item Number	Value
Layout	505	Sets the layout for printing. [0] (Default) : Auto % [2]: 2-up [3]: 4-up [4]: 100 % (size-by-size) The [Auto %] setting automatically calculates the largest magnification possible to fit to the output paper size.The [2-up] setting prints two pages onto one sheet of paper. When [2-Up] is selected, the paper size is fixed at A4.The [4-up] setting prints four pages on each sheet of paper. When [4-Up] is selected, the paper size is fixed at A4.
Paper size	506	Sets the size of the paper to be printed. [0] (Default) : Auto [1]: A4 The [Auto] setting automatically determines the paper size, based on the size and settings of a DocuWorks file to be printed.
Output color	507	Sets whether to print in color or monochrome. [0] (Default): Auto [1]: Black The [Auto] setting automatically determines the output color: color or monochrome for each page. If colors other than black and white are used on the original, the machine prints the document in color, and if only black and white are used on the original, the machine prints in monochrome.

PCL Emulation

Emulation

This section describes the printer language emulations available on the machine.

Print data conforms to certain rules (grammars). These rules (grammars) are called printer languages.

The machine supports two types of printer languages: a page description language, which is used to create images on a page-by-page basis, and an emulation, which is used to achieve the print results similar to those of other printers. To "emulate" means to imitate the print results of other printers.

Emulation Mode

When printing data written in a language other than a page description language supported by the machine, switch the machine to the emulation mode. The relationships between the emulation mode and the printer to be emulated are as follows:

Emulation Mode	Printer to be Emulated
PCL emulation mode (PCL mode)	LJ4200

Switching between Printer Languages

The machine provides the Multi-emulation feature that allows switching between different printer languages.

The methods of switching between printer languages are as follows:

■ Switching by Commands

Commands for switching between printer languages are provided. Upon receipt of a command, the machine switches to the relevant printer language.

■ Automatic Switching

The machine analyzes the data received by a host interface, and automatically identifies the printer language to be used. It then switches to the identified printer language.

■ Interface-dependent

You can set a printer language for each host interface by using CentreWare Internet Services. The machine switches to a printer language corresponding to the host interface that received data.

Fonts

Available fonts

The following fonts can be used for PCL emulation:

■ Alphanumeric fonts

- CG Times
- CG Times Italic
- CG Times Bold
- CG Times Bold Italic
- Univers Bold Condensed
- Univers Bold Condensed Italic
- Antique Olive
- Antique Olive Italic

- Univers Medium
- Univers Medium Italic
- Univers Bold
- Univers Bold Italic
- Univers Medium Condensed
- Univers Medium Condensed Italic
- Garamond Kursiv
- Garamond Halbfett
- Garamond Kursiv Halbfett
- Courier
- Courier Italic
- Courier Bold
- Courier Bold Italic
- Letter Gothic
- Letter Gothic Italic
- Letter Gothic Bold
- Albertus Medium
- Albertus Extra Bold
- Clarendon Condensed
- Coronet
- Marigold
- Arial
- Arial Italic
- Arial Bold
- Arial Bold Italic
- Times New
- Times New Italic
- Times New Bold
- Times New Bold Italic
- Symbol
- Wingdings
- Line Printer
- Times Roman
- Times Italic
- Times Bold
- Times Bold Italic
- Helvetica
- Antique Olive Bold
- CG Omega
- CG Omega Italic
- CG Omega Bold
- CG Omega Bold Italic
- Garamond Antiqua
- Helvetica Oblique
- Helvetica Bold
- Helvetica Bold Oblique
- CourierPS
- CourierPS Oblique
- CourierPS Bold
- CourierPS Bold Oblique
- SymbolPS
- Palatino Roman
- Palatino Italic
- Palatino Bold
- Palatino Bold Italic
- ITC Bookman Light
- ITC Bookman Light Italic
- ITC Bookman Demi
- ITC Bookman Demi Italic
- Helvetica Narrow
- Helvetica Narrow Oblique
- Helvetica Narrow Bold
- Helvetica Narrow Bold Oblique
- New Century Schoolbook Roman
- New Century Schoolbook Italic
- New Century Schoolbook Bold
- New Century Schoolbook Bold Italic
- ITC Avant Garde Book
- ITC Avant Garde Book Oblique
- ITC Avant Garde Demi
- ITC Avant Garde Demi Oblique
- ITC Zapf Chancery Medium Italic
- ITC Zapf Dingbats
- OCR-B

Font Caching

To ensure hi-speed printing, outline fonts of up to a certain size are cached. Outlinefonts are converted into bitmap data temporarily and then printed. To minimize thisprocessing time, the processed bitmap data is saved in the memory. This process iscalled font caching.

The saved bitmap data is deleted when you turn the machine off or reset it. For the PCL emulation mode, data other than that being processed is not saved.

Output Feature

This section describes the machine's output features. The following two output features are available:

- Outputting a Pending Print Job
- Forcible Output in Emulation Mode

Outputting a Pending Print Job

The printing of jobs already received by the machine can be prioritized over other jobs.

Reference

- For information on prioritizing the printing of jobs already received by the machine, refer to "Job Status" > "Printing Pending Jobs" in the User Guide.

Forcible Output in Emulation Mode

In emulation mode, data is not output until one complete page of data is prepared or the page break command is received. For a USB interface, if printing ends in the middle of a page, the next data set waits until the time set with [Auto Eject Time] elapses.

Reference

- For more information on forcible printing, refer to "Job Status" in the User Guide.
- For more information on the auto eject time, refer to Auto Eject Time(P.195).

PCL Emulation Settings

The following table shows the emulation parameters and their values for PCL emulation.

PCL Settings List

The following table describes the parameters that can be set with the mode menu.

Parameter	Item No.	Value
Paper tray	201	Sets the paper tray to be used for printing. [0] (Default): Auto [1]: Tray 1 [2]: Tray 2 [3]: Tray 3 [4]: Tray 4 [5]: Tray 5 **Note** • When any of Trays 1 to 4 is selected, the paper size is determined by the size of paper loaded in the tray, and thus [Paper Size] cannot be set. **Note** • When [Auto] is selected and paper of the same size in the same orientation in multiple trays is loaded, paper will be fed in the order of Tray 1 → Tray 2 →Tray 3 → Tray 4. If paper of the same size is loaded in multiple trays but in different orientations, feeding of the paper loaded in the landscape orientation is prioritized.
Auto size	202	Sets the default paper size. Only available when [Paper Tray] is set to [Auto]. Only cut sheet can be set. [3]: A3 [4] (Default): A4 [5]: A5 [14]: B4 [15]: B5 [21]: 8.5 X 14" [22]: 8.5 X 13" [23] (Default): 8.5 X 11" [24]: 11 X 17" [25]: Custom Size [30]: 8K **Important** • When any of Trays 1 to 4 is selected, [Paper Size] cannot be set. The paper size loaded in the specified tray is displayed. **Note** • When any of Trays 1 to 4 is selected, the paper size is determined by the size of paper loaded in the tray, and thus [Paper Size] cannot be set. **Note** • Depending on the combination of [Original Size] and [Paper Size], [?] may be displayed for the magnification. In this case, the document is printed at a scale of 100%.

Parameter	Item No.	Value
Bypass size	203	Sets the default paper size. Only available when [Paper Tray] is set to [Auto]. Only cut sheet can be set. [3]: A3 [4] (Default): A4 [5]: A5 [14]: B4 [15]: B5 [21]: 8.5 X 14" [22]: 8.5 X 13" [23] (Default): 8.5 X 11" [24]: 11 X 17" [25]: Custom Size
Output destination	204	Sets the output tray for the printouts. [0] (Default): Center Tray - Lower [1]: Side Tray (optional) [2]: Center Tray - Upper (optional) [80]: Right Middle Tray (optional) [81]: Right Top Tray (optional)
Orientation	205	Set the orientation of paper. [0] (Default): Portrait [1]: Landscape
2 Sided printing	206	Sets the 2 sided printing. [0] (Default): Off [1]: On

Parameter	Item No.	Value	
Default font	207	[0]: CG Times [1]: CG Times Italic [2]: CG Times Bold [3]: CG Times Bold Italic [4]: Univers Medium [5]: Univers Medium Italic [6]: Univers Bold [7]: Univers Bold Italic [8]: Univers Medium Condensed [9]: Univers Medium Condensed Italic [10]: Univers Bold Condensed [11]: Univers Bold Condensed Italic [12]: Antique Olive [13]: Antique Olive Italic [14]: Antique Olive Bold [15]: CG Omega [16]: CG Omega Italic [17]: CG Omega Bold [18]: CG Omega Bold Italic [19]: Garamond Antiqua [20]: Garamond Kursiv [21]: Garamond Halbfett [22]: Garamond Kursiv Halbfett [23] (Default): Courier [24]: Courier Italic [25]: Courier Bold [26]: Courier Bold Italic [27]: Letter Gothic [28]: Letter Gothic Italic [29]: Letter Gothic Bold [30]: Albertus Medium [31]: Albertus Extra Bold [32]: Clarendon Condensed [33]: Coronet [34]: Marigold [35]: Arial [36]: Arial Italic [37]: Arial Bold [38]: Arial Bold Italic [39]: Times New [40]: Times New Italic [41]: Times New Bold [42]: Times New Bold Italic	[43]: Symbol [44]: Wingdings [45]: Line Printer [46]: Times Roman [47]: Times Italic [48]: Times Bold [49]: Times Bold Italic [50]: Helvetica [51]: Helvetica Oblique [52]: Helvetica Bold [53]: Helvetica Bold Oblique [54]: CourierPS [55]: CourierPS Oblique [56]: CourierPS Bold [57]: CourierPS Bold Oblique [58]: SymbolPS [59]: Palatino Roman [60]: Palatino Italic [61]: Palatino Bold [62]: Palatino Bold Italic [63]: ITC Bookman Light [64]: ITC Bookman Light Italic [65]: ITC Bookman Demi [66]: ITC Bookman Demi Italic [67]: Helvetica Narrow [68]: Helvetica Narrow Oblique [69]: Helvetica Narrow Bold [70]: Helvetica Narrow Bold Oblique [71]: New Century Schoolbook Roman [72]: New Century Schoolbook Italic [73]: New Century Schoolbook Bold [74]: New Century Schoolbook Bold Italic [75]: ITC Avant Garde Book [76]: ITC Avant Garde Book Oblique [77]: ITC Avant Garde Demi [78]: ITC Avant Garde Demi Oblique [79]: ITC Zapf Chancery Medium Italic [80]: ITC Zapf Dingbats

Parameter	Item No.	Value
Symbol set	208	[0] (Default): Roman 8 [1]: ISO 8859-1 Latin 1 [2]: ISO 8859-2 Latin 2 [3]: ISO 8859-9 Latin 5 [4]: ISO 8859-10 Latin 6 [5]: PC-8 [6]: PC-8 DN [7]: PC-775 [8]: PC-850 [9]: PC-852 [10]: PC-1004 (OS/2) [11]: PC Turkish [12]: Windows 3.1 Latin 1 [13]: Windows 3.1 Latin 2 [14]: Windows 3.1 Latin 5 [15]: DeskTop [16]: PS Text [17]: MC Text [18]: Microsoft Publishing [19]: Math 8 [20]: PS Math [21]: Pi Font [22]: Legal [23]: ISO 4 United Kingdom [24]: ISO 6 ASCII [25]: ISO 11 Swedish:names [26]: ISO 15 Italian [27]: ISO 17 Spanish [28]: ISO 21 German [29]: ISO 60 Norwegian v1 [30]: ISO 69 French [31]: Windows 3.0 Latin 1 [32]: Windows Baltic [33]: Symbol [34]: Wingdings [35]: UCS-2
Font size	209	Specifies the point size of a font in 25 increments. The value of 100 represents 1 point. [400] - [5000] (Default: [1200]): 4.00 to 50.00 point
Font pitch	210	Specifies the pitch size of a font. The value of 100 represents the pitch size of 1 point. [600] - [2400] (Default: [1000]): 6.00 to 24.00 point
Form line	211	Specifies the number of lines on a page. [5] - [128] (Default: [64]): 6.00 to 24.00 point
Quantity	212	Sets the number of copies to be printed. [1] - [999] (Default: [1]): 1 to 999 sets **Note** • When the output quantity is specified by a client, that number of copies is printed. After printing, the number set on the control panel is overwritten with the number newly specified. However, the number of copies specified from the LPD port will not overwrite the number set on the control panel.
Image enhance	213	Sets whether or not to enable the Image Enhancement feature. Image Enhancement smoothens the border between black and white, reducing rough edges, and thus seemingly increasing the resolution. [0]: Off [1] (Default): On
HexDump	214	Sets whether to enable a hex dump. [0] (Default): Off [1]: On
Draft mode	215	When printing in black and white, prints the portion printed in black by using the draft mode. This feature is enabled for the entire document. [0] (Default): Off [1]: On
Color mode	216	Sets the color mode. [0] (Default): Auto [1]: Color [2]: Mono

Parameter	Item No.	Value
Binding	217	Sets binding when printing 2 sided. You can select [LEF] or [SEF] for 2 sided printing. Select according to the edge to be bound. Unifies the leading direction of the image on the front and rear sides of the paper at the long edge of the paper for LEF and at the short edge of the paper for SEF. [0] (Default): LEF [1]: SEF
Line termination	218	Sets line termination processing. [0] (Default): Off [1]: Add-LF (Appends an LF to CR) [2]: Add-CR (Appends a CR to LF and FF) [3]: CR-XX (Appends a CR to LF and FF, and LF to CR)
Default custom paper size	219(Short edge)	Specifies the default custom paper size. [2100] (Default short-edge value) : 210.0 mm [2970] (Default long-edge value) : 297.0 mm [0] - [9999]: 0 to 999.9 mm
	220(Long edge)	
	221	Sets the method for specifying the number of copies to print. [0] : Protocol [1]: Panel [2](Default): Command

HP-GL/2 Emulation

Emulation

This section describes the printer language emulations available on the machine.

Print data conforms to certain rules (grammars). These rules (grammars) are called printer languages.

The machine supports two types of printer languages: a page description language, which is used to create images on a page-by-page basis, and an emulation, which is used to achieve the print results similar to those of other printers. To "emulate" means to imitate the print results of other printers.

Emulation Mode

When printing data written in a language other than a page description language supported by the machine, switch the machine to the emulation mode. The relationships between the emulation mode and the printer to be emulated are as follows:

Emulation Mode	Printer to be Emulated
HP-GL/2 emulation mode (HP-GL/2 mode)	DJ750C Plus

Switching between Printer Languages

The machine provides the Multi-emulation feature that allows switching between different printer languages.

The methods of switching between printer languages are as follows:

■ Switching by Commands

Commands for switching between printer languages are provided. Upon receipt of a command, the machine switches to the relevant printer language.

■ Automatic Switching

The machine analyzes the data received by a host interface, and automatically identifies the printer language to be used. It then switches to the identified printer language.

■ Interface-dependent

You can set a printer language for each host interface by using CentreWare Internet Services. The machine switches to a printer language corresponding to the host interface that received data.

Fonts

Available fonts

The following fonts can be used for HP-GL/2 emulation:

■ Alphanumeric fonts

- Roman
- Sans serif

Font Caching

To ensure hi-speed printing, outline fonts of up to a certain size are cached. Outline fonts are converted into bitmap data temporarily and then printed. To minimize this processing time, the processed bitmap data is saved in the memory. This process is called font caching.

The saved bitmap data is deleted when you turn the machine off or reset it. For the PCL emulation mode, data other than that being processed is not saved.

Output Feature

This section describes the machine's output features. The following two output features are available:

- Outputting a Pending Print Job
- Forcible Output in Emulation Mode

Outputting a Pending Print Job

The printing of jobs already received by the machine can be prioritized over other jobs.

Reference

- For information on prioritizing the printing of jobs already received by the machine, refer to "11 Job Status" > "Printing Pending Jobs" in the User Guide.

Forcible Output in Emulation Mode

Factory Default Settings

In HP-GL or HP-GL/2 emulation mode factory default setting, the document is reduced or enlarged to print according to the paper size (Auto Layout).

■ Document: Auto, Coordinate Origin: 0 degrees, Scaling Mode: Paper Size, Scaling: On

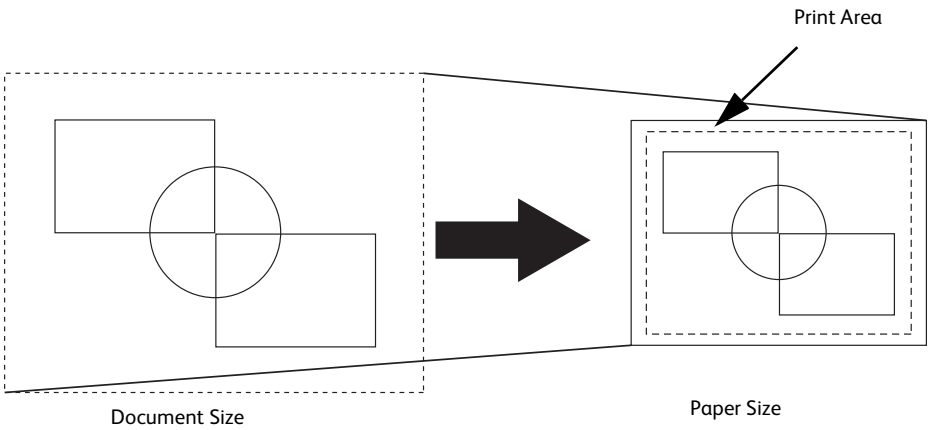

Note

- Change the factory default setting if required. For more information on changing procedures, refer to "HP-GL/2 Emulation" (P.688).

■ When the extra Hard Disk is installed on the printer

When Auto Layout is enabled, the print data is stored to the hard disk.

HP-GL/2 Emulation Settings

The following table shows the emulation parameters and their values for HP-GL/2 emulation.

HP-GL/2 Settings List

Items that can be set using the HP-GL/2 mode menu are explained in two groups: basic settings and extended settings.

Basic Settings

Parameter	Item No.	Value
Document size	101	Sets the document size created by a computer. [0]:] A0 [1]: A1 [2]: A2 [3]: A3 [4]: A4 [5]: A5 [10]: B0 [11]: B1 [12]: B2 [13]: B3 [14]: B4 [15]: B5 [99](Default):Auto [100]: Paper When [Auto] is selected, the settings of the Scaling mode, the Area Determination mode, and the Paper Margin settings of Print Control become enabled. **Note** • If the document size other than [Auto] is selected, the settings under [Auto layout] become [ON]. • Depending on the combination of [Document size] and [Paper size], the document is printed at a scale of 100%.
Paper size	102	Sets the default paper size. Only available when [Paper tray] is set to [Auto] or [Tray 5]. Only cut sheet can be set. [3]: A3 [4]: A4 [5]: A5 [14]: B4 [15]: B5 [99]: Auto [101](Default):A Size **Important** • When Trays 1 to 4 is selected, [Paper size] cannot be set. The paper size loaded in the specified tray is displayed. **Note** • If [A Size] or [Auto] is selected, the settings become as follows: • When [Document size] is set to other than [Auto], [Paper size] is set to [A3]. • When Trays 1 to 4 is selected, the paper size is determined by the size of paper loaded in the tray, and thus [Paper size] cannot be set. • Depending on the combination of [Document size] and [Paper size], [?] may be displayed for the magnification. In this case, the document is printed at a scale of 100%.

Paper tray	103	Sets the paper tray to be used for printing. [0](Default):Auto [1]: Tray1 [2]: Tray2 [3]: Tray3 [4]: Tray4 [5]: Tray5 **Important** • When Trays 1 to 4 is selected, the paper size is determined by the size of paper loaded in the tray, and thus [Paper size] cannot be set.
Paper tray	103	**Note** • When [Auto] is selected and paper of the same size in the same orientation in multiple trays is loaded, paper will be fed in the order of Tray 1 → Tray 2 → Tray 3 → Tray 4. If paper of the same size is loaded in multiple trays but in different orientations, feeding of the paper loaded in the landscape orientation is prioritized.

Extended Settings

Auto layout	106	Selects whether to perform auto layout of the document or not. [0](Default):ON [1]: OFF
Active palette	107	Selects whether to use a pen specified by command or set on the panel. [0](Default):Command [1]: Panel
No. of prints	108	Sets the number of copy to be printed. [1] - [250] (Default: 1) : 1 - 250
Output destination	109	[0] (Default) : Center Tray - Lower [1] : Side Tray (optional) [2] : Center Tray - Upper (optional) [80] : Right Middle Tray (optional) [81] : Right Top Tray (optional) **Note** • When the optional Extra Center Tray is installed, "Center Tray - Lower" is used as the Center Tray. [0] (Default) : Right Top Tray [80] : Right Middle Tray (optional) [0] (Default) : Center Tray or Center Tray - Lower [2] : Center Tray - Upper [80] : Right Middle Tray (optional) [0] (Default) : Right Top Tray [80] : Finisher Tray (optional) [0] (Default) : Center Tray [80] : Finisher Tray (optional) [0] (Default) : Center Tray or Center Tray - Upper [1] : Left Top Tray (optional) [2] : Center Tray - Lower [80] : Finisher Tray (optional) [68] : Stacker Tray (optional) [69] : Stacker - Top Tray (optional) [80] : Finisher Tray (optional) [81] : Right Top Tray (optional)
2 sided printing	110	Sets 2 sided printing. [0] (Default) : None [1] : Head to head [2] : Head to toe

Alphanumeric fonts	112	Sets the font for single-byte characters. **Reference** • For more information on fonts, refer to "Internal Fonts" (P.648). [0] (Default) : Stroke [1] : Roman [2] : Sans serif
Position adjustment	113 (Vertical position adjustment) 114 (Horizontal position adjustment)	Adjusts the hard clip area vertically or horizontally. You can set from -250 mm to +250 mm in 1 mm increments. [0] (Default) : Does not move the hard clip area. [1] - [250] : -250 to -1 mm [251] - [500] : +1 to +250 mm **Important** • Data outside the printable area is not printed regardless of the adjustment of the print position. In addition, data moved outside the printable area as a result of adjusting the print position is not printed.
Number of sets	115	Sets the method for specifying the print sets. [0] (Default) : Protocol [1] : Panel [2] : Command
Print control	150 (HP-GL mode)	Selects a graphics language. This setting affects to IW, OW, and UC of HP-GL/2 commands. [0] (Default) : HP-GL [1] : HP-GL/2 **Note** • To print HP-GL/2 command that does not include BP command, select [HP-GL/2].

Print control	151 (Hard clip)	Sets the size of hard clip area. In HP-GL mode, the plottable area is determined in line with the paper size, apart from the printable area. This area is called the "hard clip area", and determines the maximum range of pen movement. Accordingly, images cannot be drawn outside the boundary of the hard clip area. [0] : Standard [2] (Default) : Paper **Reference** • For more information on hard clip area, refer to "Hard Clip Area" (P.695).
	152 (Eject command SP)	Sets the command that indicates the end of plotting. When the command specified here is received, plotting is terminated and the paper is output. [0] (Default): OFF [1]: ON The default value is [ON] for SPO, and [OFF] for the others. **Reference** • If multiple commands are specified, when one of the commands is received, plotting is terminated and the paper is output.
	153 (Eject command SPO)	
	154 (Eject command NR)	
	155 (Eject command FR)	
	156 (Eject command PG)	
	157 (Eject command AF)	
	158 (Eject command AH)	
	159 (Scaling)	Sets whether the original size is enlarged or reduced so that the document size fits the paper size. [0]: OFF [1] (Default) : ON
	160 (Scalingmode)	Selects the document size for auto scaling: A series paper (A0, A1, A2, A3, A4, and A6) or the active coordinate area which is determined accordance with the setting selected in [Area Determination Mode]. [0] (Default) : Paper Size [1] : Active Coordinate Area **Note** • [Active Coordinate Area] can be selected only when [Auto layout] is set to [ON]. When [OFF] is selected, [Scaling mode] becomes [Paper Size]. • The setting of the scaling mode is valid when [Document size] is set to [Auto].
	161 (Activeareadetermationcommand)	Sets the method to obtain the active coordinate area when auto scaling is being used. [0] (Default) : Auto [1]: PS [2]: IW [3]: IP [4]: Adapted **Note** • The setting of the active area determination command is valid when [Document size] is set to [Auto].

Print control	162 (Papermargin)	Sets the paper margin when auto scaling is being used. [0] - [99] (Default: 0) : 0 to 99 mm **Note** • The setting of the paper margin is valid when [Document size] is set to [Auto].
	163 (Imageenhancement)	Sets whether to perform image enhancement, which artificially increases the resolution of an image and smooth its edges. [0]:OFF [1] (Default) : ON
Stapling	164	Sets the stapling position. [0] (Default) : None [1]: Top Left [2]: Top Double [3]: Top Right [4]: Left Double [5]: Right Double [6]: Bottom Left [7]: Bottom Double [8]: Bottom Right
Manual feed traycheck indicator	165	[0]:None [1] (Default): Yes
Punching	166	Select the position for punching holes. [0](Default): None [1]:Top [2]:Bottom [3]:Left [4]:Right
Number of holes	167	Select the number of punch holes. [0] (Default) : 2 holes [1]:3 holes [2]:4 holes
Emulation target printer	169	Select the machine to emulate. [0] (Default): HP750 [1]: FX4036
Pen attributes	800-815 (Pen width) (No. 0-No.15)	Set the width (thickness of the line) of the 16 pens (No. 00 to 15). You can set the width from 0.0 to 25.5 mm in 0.1 mm increments. No. 00 denotes Item No. 800. [0] - [255] (Default: 3) : 0 to 25.5 mm **Note** • If the image is reduced by concern with the relationship between [Document size] and [Paper size] settings, the pen width is reduced accordingly to 0.1 mm at the smallest. • The width of the line gets thick symmetrically with respect to the center of the line. • If the width is set to 0.0 mm, nothing is plotted.

Pen attributes	850-865 (Lineend shape) (No. 0-No.15)	Set the line end shape of the 16 pens (No. 00 to 15). No. 00 denotes Item No. 850. [0] (Default): Cut [1]: Round [2]: Rectangular [Cut] •: specified coordinate [Round] •: specified coordinate [Rectangular] •: specified coordinate
	900-915 (Pen intersects)(No. 0-No.15)	Set the process for when pens' lines intersect for 16 pens (No. 00 to 15).No. 00 denotes Item No. 900. [0] (Default): None [1]: Intersect [2]: Round [3]: Cut [None] [Intersect] [Round] [Cut] **Note** • [None] is suitable for drafts because it takes shortest processing time. • If a symbol is set by symbol command, the link process is not executed. The symbol command is an HP-GL/2 command for specifying a symbol.

Hard Clip Area

In the HP-GL mode, the plottable area is determined in line with the paper size, apart from the printable area. This area is called the "hard clip area", and determines the maximum range of pen movement. Accordingly, images cannot be drawn outside the boundary of the hard clip area. This machine allows you to select a hard clip area from the following:

- Standard

  Defines the printable area of the machine as the hard clip area.

- Paper

Defines a size same as the paper size as the hard clip area. However, the area that allows actual printing is within the printable area.

The hard clip area can be set either with HP-GL emulation mode settings or by the specified hard clip command "&I".

The following coordinate values present an example of when the origin is set at the lower left (Auto Layout in HP-GL/2) of A3 sheet.

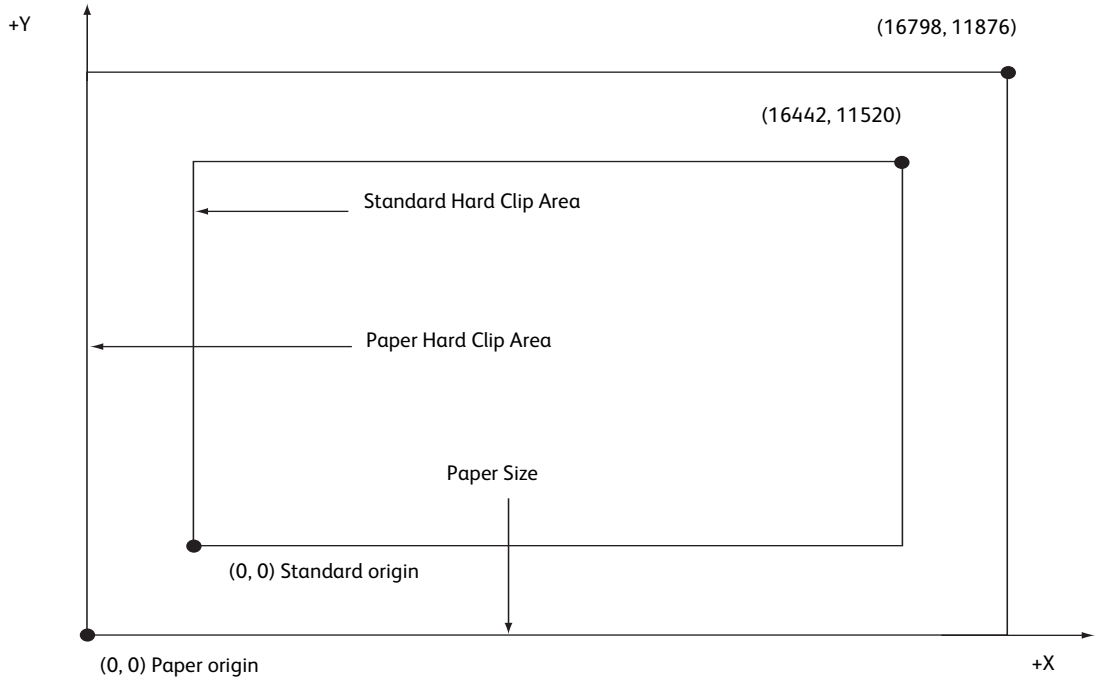

Standard

Defines the printable area of the machine as the hard clip area.

Printable Area

The printable area in the HP-GL mode is as follows:

Paper Size and Printable Area

Papersize	Paper Length(1/7200 inch)		Coordinate Value (1/7200 inch)							
	X Axis	Y Axis	Margin		Printable Area		Top-right Edge		Margin	
	Width	Height	Bottom-left X	Bottom-left Y	LongSide	ShortSide	ToprightX	ToprightY	XR	YU
A3	119052	84168	1260	1260	116532	81648	117792	82908	1260	1260
A4	84168	59508	1260	1260	81648	56988	82908	58248	1260	1260
A5	59508	41940	1260	1260	56988	39420	58248	40680	1260	1260
B4	103176	72828	1260	1260	100656	70308	101916	71568	1260	1260
B5	72828	51588	1260	1260	70308	49068	71568	50328	1260	1260

Note

- The HP-GL emulation supports five paper sizes: A3, A5, A4, B4, and B5.

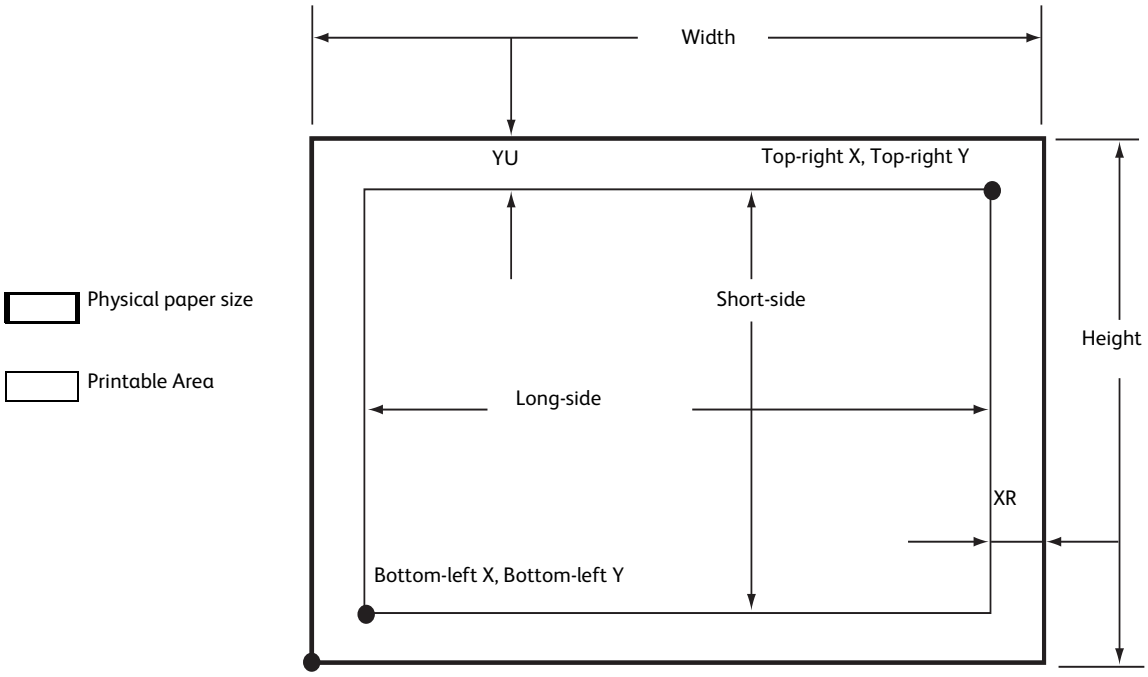

Papersize	Paper Length(1/7200 inch		Coordinate Value (1/7200 inch)							
	X Axis	Y Axis	Margin		Printable Area		Top-right Edge		Margin	
	Width	Height	Bottom-left X	Bottom-left Y	LongSide	ShortSide	ToprightX	ToprightY	XR	YU
A3	84168	119052	1260	1260	81648	116532	82908	117792	1260	1260
A4	59508	84168	1260	1260	56988	81648	58248	82908	1260	1260
A5	41940	59508	1260	1260	39420	56988	40680	58248	1260	1260

Papers ize	Paper Length(1/7200 inch		Coordinate Value (1/7200 inch)							
	X Axis	Y Axis	Margin		Printable Area		Top-right Edge		Margin	
	Width	Height	Bottom-left X	Bottom-left Y	LongSide	ShortSide	ToprightX	ToprightY	XR	YU
B4	72828	103176	1260	1260	70308	100656	71568	101916	1260	1260
B5	51588	72828	1260	1260	49068	70308	50328	71568	1260	1260

Note

- The HP-GL emulation supports five paper sizes: A3, A5, A4, B4, and B5.

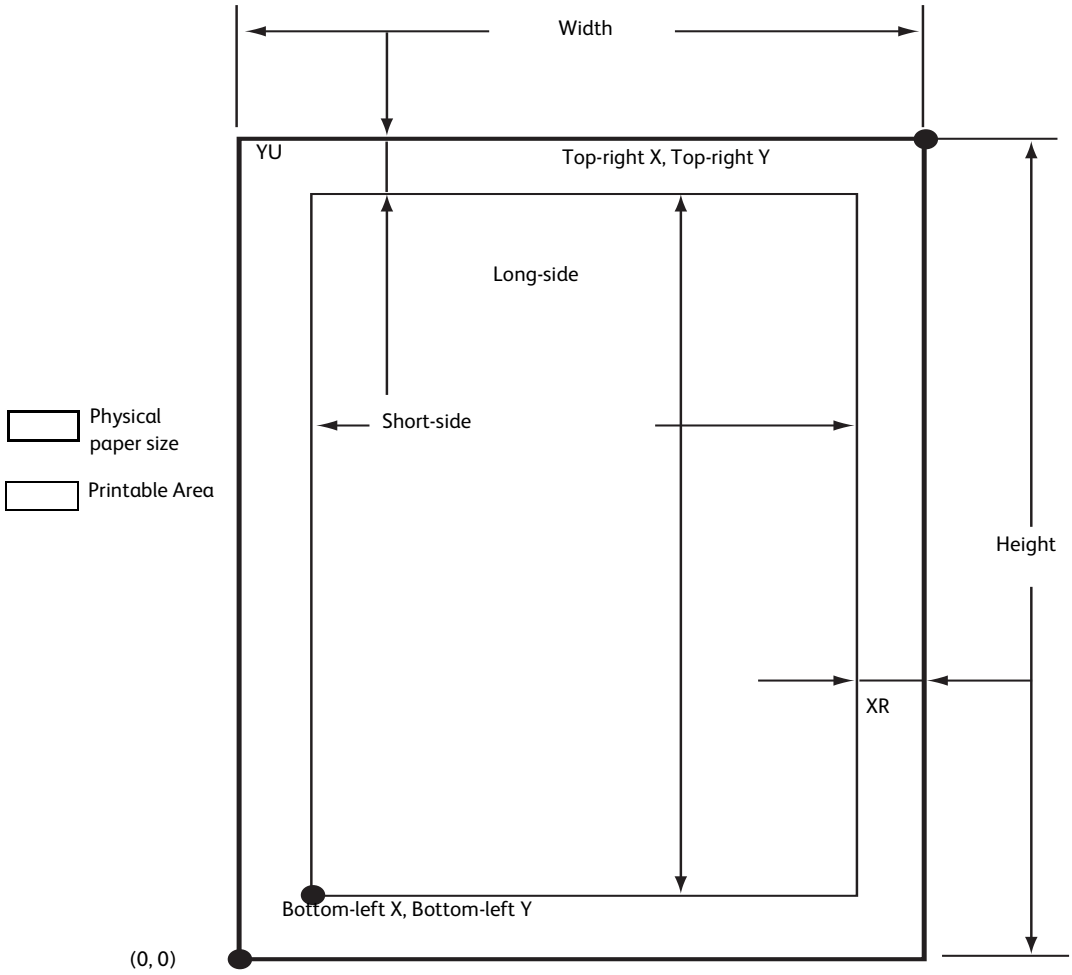

Auto Layout

This section explains Auto Layout.

What is Auto Layout?

Auto Layout is a function that evaluates document size using the HP-GL data entered from a host system and enlarges or reduces the document size corresponding to the paper size so that data plotted is placed in the center of the paper. Using the Auto Scaling/Auto Layout

function enables you to print a document in the HP-GL mode without concern for document size and origin position.

All Auto Layout settings can be made in the [HP-GL/2 - Programming] screen (Select the <Machine Status> button > [Print Mode] > [HP-GL/2 Emulation] > [Programming]). The settings cannot be made with advanced commands.

Enabling Auto Layout

To enable Auto Layout, enter Item Numbers and Values on the [HP-GL/2 - Programming] screen as follows:

- Set [Document size ([101])] to [Auto ([99])]. The default value is [Auto ([99])].
- Set [Auto layout ([106])] to [ON ([0])] to set the origin position. The default value is [ON ([0])].
- Set [Scaling ([159])] to [ON ([1])]. The default value is [ON ([1])].
- Select a method for obtaining the active coordinate area using the area determination mode. The default value is [Auto ([0])].
- Set the paper margin using [Paper margin ([162])]. The default value is 0 mm ([0]).
- Set the scaling mode. The default value is [Paper Size ([0])].

Setting Item Details

The following describes the details for each setting. You can change the settings on the [HP-GL/2 - Programming] screen.

■ Document Size

To set Document size to Auto, enter [101] to the [Item Number] box and select [Change Value], and then enter [99] to the [New Value] box and select [Save]. Once you set Document size to Auto, you can set Auto layout to ON.

■ Auto Layout

To set Auto layout to ON, enter [106] to the [Item Number] box and select [Change Value], and then enter [0] to the [New Value] box and select [Save].

Enabling Auto layout activates the settings for scaling, area determination mode, paper margins, and scaling mode.

■ Scaling

Set whether the original size is enlarged or reduced so that the document size fits the paper size.

■ Area Determination Mode

The following methods are available to obtain an active coordinates area using HP-GL data.

Auto

Automatically selects the method of determining the active coordinates area from PS, IW, IP, and Adapted in that order of priority.

IW

The area specified by the last IW command in the data becomes the active coordinates area. If there are no IW commands in the data, the active coordinates area is determined by Adapted.

IP

The coordinates encompassing all areas specified by IP commands in the data becomes the active coordinates area.If there are no IP commands in the data, the active coordinates area is determined byAdapted.

Adapted

The active coordinates area is determined by the following conditions:

- Minimum/Maximum position coordinates plotted by drawing commands
- Maximum font size specified within the page
- Maximum line width

PS

The coordinates encompassing all areas specified by PS commands in the data becomes the active coordinates area. If there are no PS commands in the data, the active coordinate area is determined by Adapted.

■ Paper Margin

Set the range from 0 to 99 mm. The default value is 0 mm. To get the active coordinates area, subtract the area set in paper margins from the active coordinates area obtained in the area determination mode.

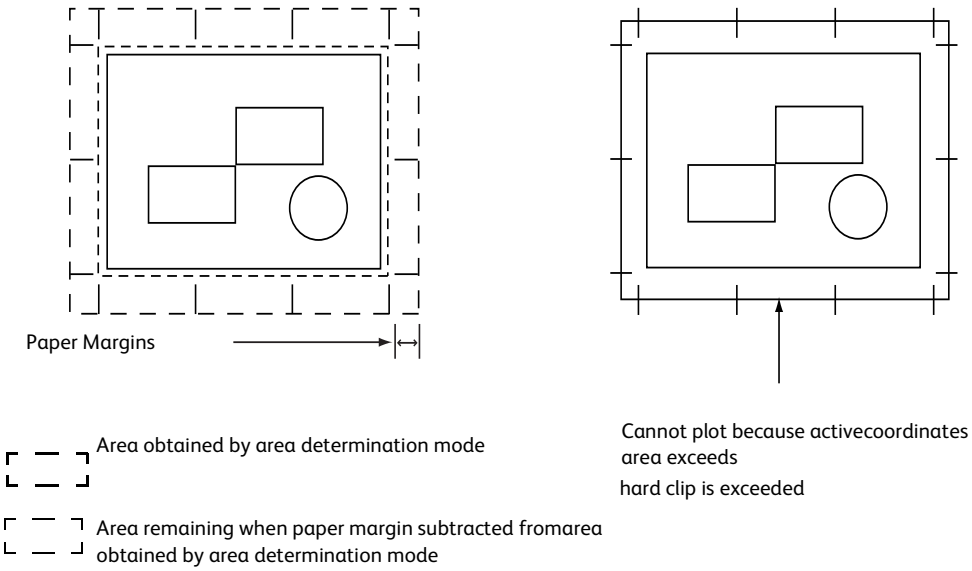

■ Scaling Mode

Select the mode for determining the document size from the obtained active coordinates area. Use active coordinates area to determine whether the paper orientation will be portrait or landscape.

- If it is an Active Coordinates Area

To obtain the document size, subtract the area specified in paper margins from the active coordinates area obtained in the area determination mode.

- If it is a Paper Size

Set the document size from the obtained active coordinates area and the origin point setting. The document size can be selected from six sizes of A series paper (A0, A1, A2, A3, A4, or A5).

How to Determine Document Size

The document size is determined by comparing with the hard clip area of each paper size based on the active coordinates area obtained in the scaling mode, paper margin, and area determination mode.

■ If the Scaling Mode is a Paper Size

1) Obtain the coordinate area to be active from the HP-GL data entered, in accordance with the area determination mode.

2) As a margin, add the larger value of either the font size specified in the page, the default size or one half the specified pen width, to the active coordinates area obtained in step 1.

3) Subtract the value set in paper margins from the active coordinates area obtained in step 2.

4) The minimum size that includes the active coordinates area obtained in step 3 will be the document size.

■ If the Scaling Mode is the ACA

1) Obtain the coordinate area to be active from the HP-GL data entered, in accord with the area determination mode.

2) As a margin, add the larger value of either the font size specified in the page, the default size or one half the specified pen width, to the active coordinates area obtained in step 1.

3) Subtract the value set in paper margins from the active coordinates area obtained in step 2.

4) The ACA obtained in the process up to step 3 will be the document size.

- For Example:

If the following data is entered when the scaling mode is paper size, origin position is Auto, paper margin is 10mm, and area determination mode is IP:

All pen width settings are 0.1 mm.

The following data does not contain a character size specification command and the A3 physical size of the area specified by IP/IW.

IN;

IP-8399,-5938, 8399, 5938;

IW-8399,-5938, 8399, 5938;

PU;

SP1;

:

:

SP0;

1) As the area determination mode is IP, the active coordinates area is specified as the area -8399,-5938,8399,5938 by an IP command.

2) Because there are no font size specification commands and all pen widths are 0.1mm in the above example, add the height/2 of the default font size for A3 size paper (75 plotter units) to the active coordinates area obtained in step 1.

The active coordinates area obtained in step 2 is -8474,-6013,8474,6013.

3) The value set in paper margins (10 mm = 400 plotter units) is subtracted from the active coordinates area obtained in step 2.

The active coordinates area obtained in step 3 is -8074,-5613,8074,5613.

4) As the active coordinates area obtained in step 3 exceeds the A4 size and is A3 size, the document size is determined to be A3.

In addition, when the paper margin setting is 0 mm and the active coordinates area is 8474,-6013,8474,6013, and this exceeds A3, but is A2 or smaller, the document size is determined to be A2.

If the operation panel settings are as follows, the paper size is determined as below.

Document size: Auto

Paper Tray: Auto

The method for determining the paper size differs according to the paper size and scaling mode settings on the operation panel.

■ If the Paper Size Setting is A Sizes

The paper sizes among the three sizes (A3, A4, and A5) that are actually loaded in the trays become the possible paper size.

If A series paper (A3, A4, A5) is not loaded in the trays, all three sizes, A3, A4, and A5 become possible sizes; a message is displayed on the touch screen prompting the user to load A series paper.

■ If the Paper Size Setting is Auto

The paper sizes among the five sizes (A3, B4, A4, B5, and A5) that are actually loaded in the trays become the possible paper size.

If A3, B4, A4, B5, or A5 paper is not loaded in the trays, all five sizes become possible sizes; a message is displayed on the touch screen prompting the user to load paper.

■ If the Scaling Mode Setting is Paper Size

If the paper size and the document size are the same, select paper that is the same size as the document.

If the document size is larger than any possible paper sizes, select the largest paper.

If the document size is smaller than any possible paper sizes, select the smallest paper.

■ If the Scaling Mode Setting is ACA

Select the smallest paper size that can contain the ACA.

If the active coordinates area is larger than any possible paper sizes, select the largest paper.

If the active coordinates area is smaller than any possible paper sizes, select the smallest paper.

Note

- If the document size is set to anything other than Auto, the paper size is the one set on the control panel.
- If the paper tray is set to Auto, the paper size is the one loaded in each tray. However, If paper whose size is not supported is loaded, an error message will be displayed prompting the user to load a supported paper.

How to Determine the Scaling Ratio

When auto scaling is being used, although the scaling ratio is determined by document size and paper size, it differs according to the scale mode setting.

Note

- To activate scaling, set the scaling to ON on the [HP-GL/2 - Programming] screen. If it is set to OFF, it is plotted at the same scale (100 %).

■ If the Document Size is Auto and the Scaling Mode is Paper Size

The hard clip setting is inactive. The hard clip area is always the paper's hard clip area.

- If the document size = paper size, it plots at the same scale (100 %).
- If the document size > paper size, it plots at a reduced scale.
- If the document size < paper size, it plots at the same scale (100 %).

Paper Size / Document Size	A3	A4	A5	B4	B5
A0	35	25	100	31	100
A1	50	35	25	43	31
A2	71	50	35	61	43
A3	100	71	50	87	61
A4	100	100	71	100	87
A5	100	100	100	100	100

Unit: Percent (%)

If the origin position of the plotting position is Layout, the document is placed and drawn in the center.

If the origin position is bottom left or center, the origin of the document and the paper are aligned and drawn.

■ If the Document Size is Auto and the Scaling Mode is ACA

The hard clip setting is inactive. The hard clip area is always the advanced hard clip area.

The scaling factor is determined according to the ACA and the paper size. The range for the ACA for each paper size is as follows:

Paper Size	0 Degrees				90 Degrees			
	Min Value		Max Value		Min Value		Max Value	
	P2x - P1x	P2y - P1y	P2x - P1x	P2y - P1y	P2x - P1x	P2y - P1y	P2x - P1x	P2y - P1y
A3	7829	5485	73075	51200	5485	7829	51200	73075
A4	5485	3828	51200	35733	3828	5485	35733	51200
A5	3828	2648	35733	24720	2648	3828	44088	35733
B4	6762	4723	63120	44088	4723	6762	44088	63120
B5	4723	3297	44088	30773	3297	4723	30773	44088

Unit: Plotter Unit

The maximum scaling factor is 210 % of the advanced hard clip area for each paper size and the minimum scaling factor is 22.5 %.

Restriction on Auto Layout

■ When the extra Hard Disk is installed on the printer

When Auto Layout is enabled, the print data is stored to the hard disk.

■ When the extra Hard Disk is not installed on the printer

When Auto Layout is enabled, the print data is stored to auto layout memory area.The default size of auto layout memory is set to 100 kbyte and an error will occur on the printer when the print data exceeds 100 kbyte. In this case, change the size of auto layout memory using the control panel. Auto layout memory size can be set up to 5120 kbyte. The printer cannot receive the print data exceeding 5120 kbyte. We recommend you to install hard disk on the printer when using Auto Layout feature.

Examples of Combinations of Each Function

The following are examples showing the print results that can be achieved by combining various functions.

■ Document: Auto, Coordinate Origin: 0 Degrees, Scaling Mode: Paper Size, Scaling: ON

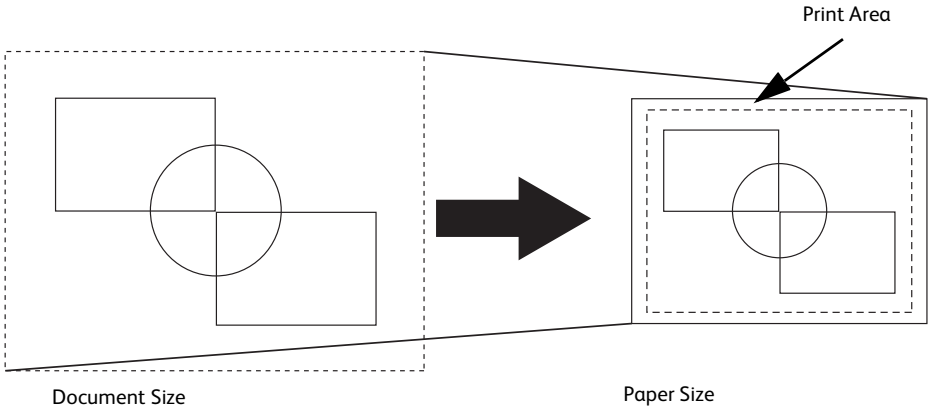

■ Document: Auto, Coordinate Origin: 0 Degrees, Scaling Mode: Paper Size, Scaling: OFF

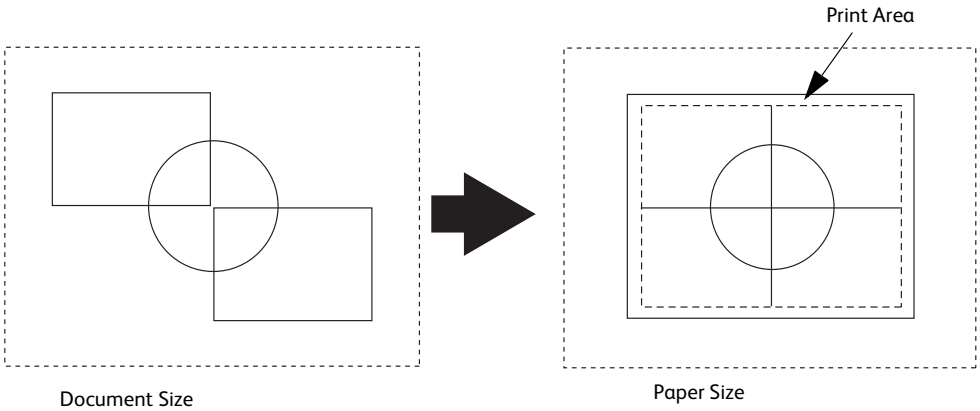

■ Document: Auto, Coordinate Origin: 0 Degrees, Scaling Mode: Active Coordinate Area, Scaling: ON

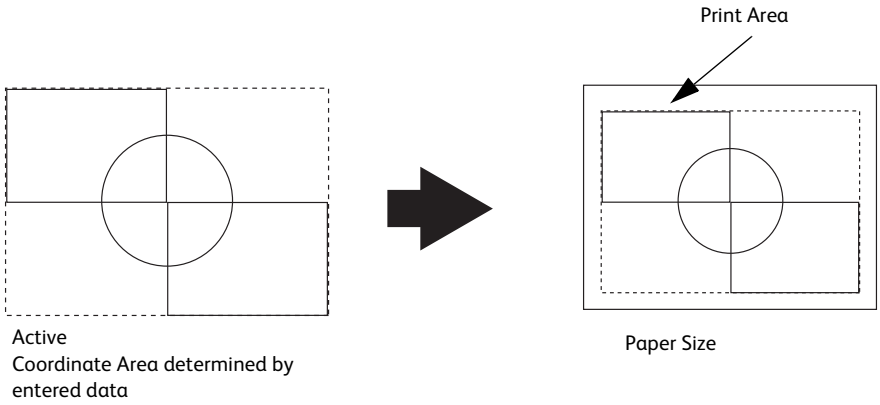

■ **Document: Auto, Coordinate Origin: 0 Degrees, Scaling Mode: Active Coordinate Area, Scaling: OFF**

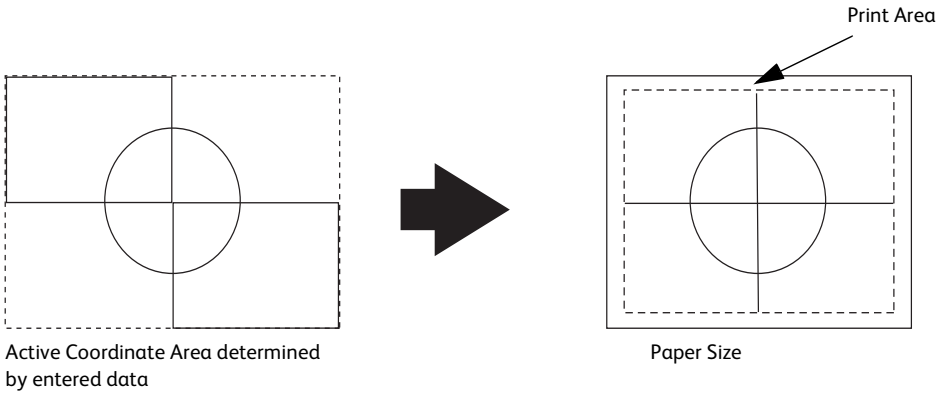

Notes and Restrictions

This section describes the notes and restrictions to observe when using the machine.

Notes and Restrictions on the Use of the Machine

■ Notes on Switching Off the Main Power and Power

Power off processing is performed internally on the machine for a while after the power is switched off. Therefore, do not switch the main power off immediately after switching the power off. Do not switch the main power off while the touch screen displays a screen or the <Power Saver> button blinks. Switching off the main power may damage the hard disk and the memory or cause a machine malfunction. In addition, the machine will not be activated soon if you switch on the power before the touch screen gets blank. Confirm that the touch screen is blank before switching on the power.

■ Installing and Moving the Machine

- When moving the machine to another location, contact our Customer Support Center.
- When the machine is operating, do not subject it to shock.
- When closing the document cover, be careful not to pinch your fingers.
- Do not place any objects near the ventilation openings of the machine's exhaust fan.

■ Character Code

In data transmission from a computer or read processing of data in a medium such as a USB memory device, if characters that the machine does not support are included in folder and file names, these characters may not be displayed correctly.

When the Media Print - Photos service is used, only ASCII characters can be used.

■ Output Destination

When you change the finisher to install, reconfigure the output destination under [Tools] > [System Settings] > [Copy Service Settings] > [Copy Defaults] > [Output Destination].

You can also change the output destination for Print E-mail, Private Folder Printed Files, and Fax Received as required.

■ Restrictions on Method of Recipient Specification

- The [New Recipients] and [Redial List] buttons may not be displayed when you specify a recipient for fax/Internet fax/e-mail transmission if the method of recipient specification is restricted in the System Administration mode. In this case, you cannot use the numeric keypad either. Consequently, the recipients you can specify are limited to those who are registered on the Address Book.

  You must add an address book entry using CentreWare Internet Services or Device Setup Tool (free software). The system administrator, however, can register new recipients from the control panel of the machine even when the method of recipient specification is limited.

- The users who belong to an authorization group for which [Restrict Recipient Selection Method] is set to [No Restriction] can directly specify a recipient for fax/Internet fax or an e-mail transmission.

■ One-Touch Buttons

The One-Touch buttons (only for fax models) are used to specify an address when sending faxes, IP faxes, internet faxes, Scan to PC, or E-mail. The buttons cannot be used when you specify an e-mail address, a shared folder of SMB/FTP, or a server address.

The following two methods are available to assign the address numbers to the One-Touch buttons.

- [Type 1]: Assigns the One-Touch buttons 1 to 52 to the address numbers 0001 to 0052, and buttons 53 and 54 to the stored programming jobs 1 and 2.
- [Type 2]: Assigns the One-Touch buttons 1 to 45 to the address numbers 0001 to 0045, and buttons 46 to 54 to the stored programming jobs 1 to 9.

Note

- [Type 1] is selected by factory default.

Reference

- For more information on how to change the number of address numbers assigned, refer to "One-touch Buttons" (P.153).

■ Assigning to the One-Touch Buttons

You can change the way how address numbers and stored programs are assigned to the One-Touch buttons. When you have changed the assignment, some One-Touch buttons that were used for address numbers before may be used for stored programs while other One-Touch buttons that were used for stored programs before may be used for address numbers. Be sure that you perform the correct operation.

■ IC Card Reader (optional)

- There are two types of IC Card Reader you can choose: the Embedded IC Card Reader (optional) and the IC Card Reader for Wing Table (optional).
- Installing the IC Card Reader to the machine enhances the authentication function of the machine. Also, you can restrict the usage of the machine and improve the security management feature and availability of documents.
- The following EP accessories can be simultaneously installed on the machine with the IC Card Reader.
  - Foot Switch
  - Dispenser 2
  - IC Card Cashier
  - Coinkit 8
  - Coinkit 9

Note

- When you want to install IC Card Cashier, contact our Customer Support Center. Our service representative performs the installation and configures the settings.

■ Printed Time in Force Annotation

The time you specified to print a job, the time at which the print job is started inside the machine, and the time at which the job is actually printed may not be coincident with one another depending on the machine status and settings or the content of the print job. The time printed in Force Annotation is the time at which the print job is started inside the machine.

■ Stored Programming

- The following features and operations cannot be registered on a stored program.
  - Registration and call of a stored program
  - EP Diagnostic Request

- System Settings
- The [Media Print - Text] and [Media Print - Photos] buttons on the Services Home screen
- The [Store to USB] button on the Services Home screen
- The [Job Flow Sheets], on the Services Home screen
- A custom button to which the Job Flow service is assigned
- Address Book for the Fax/Internet Fax, E-mail, and Scan to PC services
- Buttons that cannot be selected
- The [Language] button on the Services Home screen
- The [Screen Brightness] button on the Services Home screen
- The [Browse] button of the Scan to PC service
- Address editing operation of the E-mail service ([Remove], [Edit], and [Close Menu] on the pop-up menu)
- The <Power Saver> button

• After registering a program, you may not be able to retrieve the stored program correctly if you execute the following operations:
  - If a Watermark is registered on the program, and you change the default value of the Watermark after registering the program
  - If a passcode of a folder that is subject to operation by a stored program is changed after the program is registered
  - If the settings of the control panel are changed
  - If the features registered on the custom buttons are changed
  - If the setting is changed with [Tools] > [System Settings] > [Copy Service Settings] > [Preset Buttons]
  - If the program is selected from a list of a job flow or the Address Book
  - If a button no longer functions as a result of a change of optional components such as Finisher
  - If the measurement unit such as mm or inch is changed
  - If a file is selected from a file list with Job Status
  - The use of a scrolling bar when you select an item

■ Output Color

When you select [Auto Detect] in [Output Color] for a copy job or select [Color] in [Output Color] for a print job, the machine may consume yellow, magenta, and cyan toner cartridges and drum cartridges even when your document is black and white.

In addition, when [Background Suppression (Color Copy)] is set to [High Speed] under [Tools] > [System Settings] > [Common Service Settings] > [Image Quality Adjustment], yellow, magenta, and cyan toner cartridges and drum cartridges are always used. Thus these color toner cartridges and drum cartridges are consumed even when your document is black and white.

■ Opening and Closing of the Document Cover during the Power Saver Mode

If you open the document cover during the Power Saver mode, and then start scanning a document immediately after the machine exits the mode, the detection error of a document size may occur. In this case, enter the document size manually. It takes a few seconds before the machine can detect a document size automatically. This detection error will not occur if you load a document, close the document cover, and wait for a few seconds before start scanning a document.

■ Operations during the Power Saver mode

- It takes a few seconds before you can operate the system settings under [Tools] after the machine exits the Sleep mode.
- The <Power Saver> button still lights up when you perform the operations which do not light up the touch screen such as printing command from a computer.
- A message does not appear on the touch screen if you open and close the top cover of the document feeder when the document feeder is deactivated (such as when the service to use a scanner is not selected). However, the confirmation message appears on the touch screen and the <Error> indicator lights up when the document feeder is activated (exits the Power Saver mode) while the top cover is open.
- The machine exits the Power Saver mode when you open the document cover to copy or scan.
- After the machine exits the Power Saver mode, the document feeder and scanner device are activated after the document cover is opened while the scanner device is deactivated. However, to make the document detected on the document glass, make sure that the scanner device in the document glass moves to the detect position for the document size, and then close the document cover.
- After the machine is activated from the Power Saver mode, a message does not appear on the touch screen if you perform the following operations while the service to be used for the output device, such as copying and secure printing, is not selected.
  - Opening and closing the top cover of the document feeder
  - Opening and closing the front cover
  - Opening and closing the bottom left cover
  - Opening the paper tray
  - All the operations including opening and closing the front cover of the finisher, and pressing the buttons

  However, the confirmation message appears and the <Error> indicator lights up when the machine is activated (exits the Power Saver mode) while each cover or a paper tray is open.
- After the machine exits the Power Saver mode, the value detected before the machine enters the Power Saver mode is displayed or informed as paper tray status and the information on the consumables such as the toner remaining amount, status of the drum cartridge, and paper, if the service used for the output device is not activated.
- After the machine exits the Power Saver mode, be careful for the following if you use the copy feature before you activate the service used for the output device. The information displayed such as a paper size specified for the paper tray or the remaining amount is detected before the Power Saver mode. If you change the paper size or remaining amount during the Power Saver mode, it takes a few seconds for the change to be updated on the screen.
- Exiting the Power Saver mode activates the entire machine when Copy, Simple Copy, or Stored Programming is set as the default screen on the touch screen.
- Exiting the Power Saver mode activates the entire machine when [Paper Tray Attributes During Loading] is set to [On].
- The entire machine exits the Power Saver mode when you press the <Machine Status> button, enter the System Administration mode, or select the Stored Programming service.
- The machine does not exit the Sleep mode when you use the EP service by EP-BB.

- When [Tools] > [System Settings] > [Connectivity & Network Setup] > [Port Settings] > [USB] > [USB - Print Mode] is set to any option other than [Auto], exiting the Power Saver mode activates the entire machine.

Notes and Restrictions on the Use of the Copy Feature

■ Copy Feature

The machine does not offer the Improves Fit feature.

■ Meter Count for Dual Color and Single Color Copies

Dual color and single color copies are counted as color copies.

■ Color Effect for Dual Color Copy

To extract colors for dual color copy, adjusting the colors of the document is requiredin advance.

Our service representative performs the adjustment. Contact our Customer SupportCenter.

■ Pages per Side for Black & White and Color Mixed Documents and Meter Count

If you copy a document that contains black & white and color pages by specifying[Pages per Side], an output sheet that has both black & white and color pages will be counted as a color page.

■ Copy and Simple Copy

You cannot switch the screen between the Copy and Simple Copy services. Return to the Services Home screen, and then select a service. In that case, the settingsspecified in either service are cleared.

■ ID Card Copy

- The machine does not shift the ID card image to the center of the output in any magnification ratio and image size you specified.
- When the reduced size is specified to copy an ID card, the machine may copy the ID card in a different orientation from the original orientation depending on the magnification ratio specified.

Notes and Restrictions on the Use of the Print Feature

■ Output of Long Feed Documents

The output of long feed documents is not supported.

■ PostScript Driver

Some options such as Poster (Photo Enlargement) are not supported by the PostScript driver. With the Pages per Sheet (N-Up) feature, you can specify 2, 4, 6, 9, or 16 pages up, and with or without frame borders.

■ Printing from Macintosh via USB Connection

When you send a print job from the PostScript driver of Macintosh connected via USB and the job includes application data with graphic data (EPS file including binary data) pasted,

the machine may misidentify the binary data as protocol data; therefore, the output of text data may extend for multiple pages.

In this case, select [RAW] for [Adobe Communication Protocol] under [Tools] > [System Settings] > [Connectivity & Network Setup] > [Port Settings] > [USB] to properly print data which includes EPS files with binary data.

■ Text and Photos for Media Print

You can use a commercially available single-slot memory card reader, but the operation is not guaranteed. When you use a multi-slot memory card reader, only one of those slots can be recognized. The slot to be used differs depending on the card readers. Some of the media and slots of memory card readers may not be used on the machine, and the operation is not guaranteed.

■ Thumbnail for Media Print

The Media Print - Photos feature supports Thumbnail view but not Preview. The Media Print - Text feature supports neither Thumbnail view nor Preview.

■ Print Jobs while the Control Panel is being Operated

The processing and output speeds of print jobs may slow in the following conditions:

- The control panel is being operated while the machine processes a print job.
- The status of a print job is being viewed in the [Job Status] screen.

■ When the Print Results Differ from the Settings

As in the following cases, insufficient memory for the print page buffer may cause print result in not printing as specified. In this case, we recommend that you increase the memory.

- Printed only on 1 side when 2 sided printing is specified.
- A job was terminated (If data cannot be written to the print page buffer, the job including that page is terminated).

■ Direct Print via USB Host (a USB memory device)

When the machine is in the Sleep mode, your computer does not detect the machine if you connect a USB memory device to the machine. Exit the Sleep mode, and thenconnect the USB memory device and send a print job.

■ Printing from a USB Memory Device

- To print from a USB memory device, the USB Memory Kit (optional) is required.
- Use USB 2.0 compliant memory devices only.

  The following USB memory devices are not supported:

  - A USB memory device with multiple media partitions that require other utilities to access to the contents therein.
  - A USB memory device connected via an external hub.
- Multiple USB memory devices cannot be used simultaneously.
- The machine does not display a menu to prevent you from removing a USB memory device while it is being accessed.

■ Meter Counts for 2 Sided Printing

When printing 2 sided, depending on the application being used, blank sheets can be inserted automatically to adjust pages. These blank sheets inserted by the application will also be counted by the meter.

■ Meter Count for Watermark

When the Copy Management Expansion Kit (optional) is installed and a document is printed using the Watermark feature (such as Annotation and Force Annotation), the meters count with the following method:

- Color documents are counted as color copies regardless of whether the Watermark feature is used or not.
- Black & white documents are counted as color copies if [Font Color] is set to other than [Black], or counted as black & white if [Font Color] is set to [Black].

■ PDF Direct Print

PDF Direct Print supports Adobe PDF 1.6. However, note the followings:

- It may take long to output a PDF file, for the rendering processing is complicated.
- This feature does not support the "Embed OpenType Fonts" setting of Adobe® Acrobat® 7 (PDF 1.6).
- This feature supports the features of PDF 1.6 created by Adobe Acrobat 7 or later. However, it does not support the features of PDF 1.7 (Adobe Acrobat 8 and 9).
- PDF Bridge, which is provided by Fuji Xerox, of the machine supports the features of PDF 1.6 such as transparent object.
- Set the PostScript Memory to its maximum value (128MB) to print PDF files properly.

■ ThinPrint

- To install "ThinPrint .print" to Windows Server 2003 or Windows Server 2008, a ".print Application Server Engine" licence is required.
- ThinPrint can operate in an IPv4 environment, but not in an IPv6 environment.
- ".print AutoConnect" is not supported.
- Up to three can be connected simultaneously. The fourth or above connection requests are stored in the queue. Up to 10 connection requests can be stored in the queue. If exceeding 10, another connection request is no longer received. After preceding connections are terminated, the connection requests in the queue will be processed subsequently when the total number of the connections becomes less than four.
- Functions to control jobs, such as canceling or suspending jobs, are not provided. Instead, you can cancel a job on the [Job Status] screen from the control panel, or from CentreWare Internet Services.
- The machine prints jobs in the order in which they are spooled. The jobs may not be printed in the order in which the job requests are received by the machine.
- If the power is switched off, this feature can store the order of jobs spooled and their data. If the power switched off while a job is being received, the job is deleted.

■ Paper Orientation when Printing Mixed Size Originals

- The combinations available for printing mixed size originals from the print driver are the followings: A4 and A3, B5 and B4, 8.5 x 11" (Letter) and 11 x 17" (Tabloid), 16K and 8K.
- The document orientation (portrait or landscape) may not be determined correctly depending on the application being used. In this case, the output may have a different

orientation from the document orientation, depending on the combination of the mixed size originals.

- The output may have a different orientation from the original orientation when a document stored in a folder is printed.

■ Direct Fax Driver

The direct fax driver does not support Envelope (90 x 205 mm), Envelope (162 x 229 mm), Envelope (229 x 324 mm), and Envelope (235 x 120 mm).

■ Printing via lpr Port

When a print job is sent via the lpr port, the characters of user name, file name, or host name may be garbled and displayed incorrectly on the screen during printing, the job confirmation screen, or the Job History Report.

To prevent character garbling, use a port other than lpr.

■ When Using the Authentication Feature on the machine

When you set the authentication information on the print driver, set the User ID up to 32 single-byte characters (16 double-byte characters). If you set the User ID using 17 doublebyte characters or more, an authentication error occurs so that you cannot start printing.

Notes and Restrictions on the Use of the Scan Features

This section describes notes and restrictions to observe when using the Scan features.

Reference

- For the notes and restrictions on Network Scan Driver and Stored File Manager 3, refer to the Readme contained in the Media (Software/Product Manual).

■ Retrieving Files from Folder

- When [Delete Files After Retrieval] is set to [No], the same file can be accessed by multiple clients.

  When [Delete Files After Retrieval] is set to [Yes], only one client can access any given file. The file that is being imported by a client cannot be seen by other clients.

- When files are retrieved from CentreWare Internet Services, the files are not deleted regardless of the setting of [Delete Files After Retrieval].

■ Using Network Scan Driver and Stored File Manager 3 Simultaneously

You cannot use both the Network Scan Driver and Stored File Manager 3 on a single computer to connect to the machine.

A maximum of three computers using either the Network Scan Driver or Stored File Manager 3 may retrieve files simultaneously from one machine.

■ Secure Polling from Other Faxes

■ Using TIFF Files

The TIFF files created by Stored File Manager 3 are compressed into the MMR, MH,JBIG, or JPEG format. To open a TIFF file, use application software that supports the format.

■ Restriction on Scanning Capacity

The maximum scanning capacity for one page is 297 x 432 mm. For standard sizes,A3 or 11 x 17 inches.

■ Number of Sheets for Scanning (for Folder)

A maximum of 999 pages can be scanned for folders at one time. The number of pages may differ depending on the file size and resolution.

■ Store to USB

- The Scanner Kit (optional) and the USB Memory Kit (optional) are required to use this service.
- You cannot use this service on job flows (whose Target is Scan Jobs or Folder).
- The USB 2.0 compliant memory device is supported.
- Neither file nor directory names in a USB memory device are displayed on the touch screen.
- You cannot delete the files or folders in a USB memory device using the machine.
- To prevent you from removing a USB memory device while it is being accessed, an icon showing that the removal of a USB memory device is prohibited appears on the touch screen. Be sure to remove a USB memory device from the machine after the message "Data has been transferred." is displayed on the touch screen.
- When the data size exceeds the capacity of the USB memory device while the machine is performing the Store to USB service, the job in progress is cancelled.
- Neither the Media Print - Text nor Media Print - Photos feature can be used while the Store to USB service is in progress. The Store to USB service cannot be used as well while the Media Print - Text or Media Print - Photos feature is in progress.
- You can enable or disable the Store to USB service from CentreWare Internet Services in the System Administration mode. You cannot set it from the touch screen. (The default setting is [Enabled].)
- You can set not to display the [Store to USB] service on the Services Home screen from the touch screen.
- The machine may not be able to recognize a USB memory device that was formatted by a digital camera or a tool other than the Windows standard format tool.

■ Screen Switching After Inserting a USB Memory Device

- If a USB memory device is inserted when the machine is switched off, and then you switch on, the Services Home screen is displayed.
- When a USB memory device is inserted into the USB memory slot during the Power Saver mode, the touch screen does not light up. After exiting the Power Saver mode by pressing the <Power Saver> button, insert the USB memory device again or select the feature to be used on the Services Home screen.
- The screen does not switch when removing a USB memory device.
- The screen switches even when a USB memory device whose format is not supported is inserted. However, an error occurs when selecting the menu.
- If no media is in the Memory Card Reader (commercially available), the screen switches when you insert the Reader.
- If the Memory Card Reader (commercially available) is used and it is left inserted all the time, the screen does not switch even when a media is inserted into the slot of the Reader.

■ Network Reference on SMB Environment

- If you configure more than 256 shared resources other than shared folders (such as shared printers) when using Windows Server 2003, Windows Server 2012, Windows

Server 2012 R2, Windows Vista, Windows 7, Windows 8, or Windows 8.1, shared resources other than shared folders may be displayed in the shared folder list.

- Names such as workgroup names, server names, and shared names on the network may not be displayed alphabetically on the list.

■ Scan High Compression Feature

- To use the Image Compression feature, the Scan features are required.
- You can select 200 dpi or 300 dpi for the resolution.
- To view or print High-compression DocuWorks documents that are output by using the Image Compression feature (on your computer), one of the following software is required:
  - DocuWorks 6.0 or later
  - DocuWorks Viewer Light 5.1 or later
  - DocuWorks Viewer Light for Web 5.1 or later

Note

- You cannot use DocuWorks Trial edition.Use DocuWorks Viewer Light 7.0 (free distribution) contained in the Media (Software/Product Manual).

- You can open High-compression PDF files with Adobe Acrobat 4.0 (PDF 1.3) or later.
- The Image Compression feature may not be able to scan the colors of the documents precisely due to the image processing to improve the compression ratio.

■ High Compression Image Kit (Optional)

- To use the Image Compression feature, the Scan features are required.
- You can select 200 dpi or 300 dpi for the resolution.
- To view or print High-compression DocuWorks documents that are output by using the Image Compression feature (on your computer), one of the following software is required:
  - DocuWorks 6.0 or later
  - DocuWorks Viewer Light 5.1 or later
  - DocuWorks Viewer Light for Web 5.1 or later

Note

- You cannot use DocuWorks Trial edition.

- You can open High-compression PDF files with Adobe Acrobat 4.0 (PDF 1.3) or later.
- The Image Compression feature may not be able to scan the colors of the documents precisely due to the image processing to improve the compression ratio.

■ PKI Encryption and PKI Signature of Scan Files

- Signature using the electronic stamp of DocuWorks is not supported.
- Acrobat Approval is not supported.

■ PKI Encryption and PKI Signature of PDF and DocuWorks Documents

- PKI (Public Key Infrastructure) encryption of PDF is not available. A certificate is not used for password encryption.
- If a message stating that a certificate revocation could not be checked is displayed and a signature verification error occurs in the viewer of DocuWorks and PDF, confirm the certificate revocation setting in the viewer.

■ Digital Signature of PDF

- The security handler (XERX.FX.PPKMS) of Xerox is not provided.
- When a PDF document signed by the machine is displayed with Adobe Acrobat (Reader), a message stating that no handler is found for signature confirmation may be displayed. In this case, select [Windows Digital Certificate] or [Adobe Default Security].
- A certificate to be used for PDF digital signature must meet the conditions described in the "S/MIME" section.

■ S/MIME Communication

The E-mail and Internet Fax services support S/MIME.

■ Searchable PDF

- We recommend that you set [300 dpi] for [Resolution] when you use the optical character recognition (OCR) feature.
- For Store to Folder, you cannot select [Searchable] for [Searchable Text].
- When you use CentreWare Internet Services to retrieve a file from a folder, you can set [Searchable Text] if all scanned images of the file in the folder are set as follows:
  - Image Size: 15 x 15 mm to 309 x 432 mm
  - Color Scanning: Auto Detect, Color, Grayscale, Black & White (Black & White only for some models)
  - Original Type: Photo & Text, Text (for faxes, all types)
  - Color Space: sRGB
  - Resolution: 200dpi, 300dpi (for faxes, all resolutions)
  - Reduce/Enlarge: 100 % (for faxes, all ratios)

■ Compression Format of Scanned Images

- You cannot retrieve grayscale or color images in uncompressed (Raw) format.
- JBIG2 compression of PDF is supported.

■ Preview of Scan File

- The output is not rotated even when the previewed image is rotated on the screen in the following cases:
  - The document is output in TIFF or JPEG
  - The document is scanned to a folder
  - The document is scanned using a job flow sheet
- If a preview image is not what you expected, cancel the job, configure the settings, and then scan the document again.
- If you cancel the scanning of a document by pressing the <Stop> button on the control panel or the [Delete] button in the touch screen, selecting [Preview] may not display all the scanned files.

■ Scanning Documents with a Small Number of Colors (the Specific Color Feature)

- To use the Specific Color feature, the High Compression Image Kit (optional) is required.
- Specific Color (for PDF or DocuWorks) and MRC High Compression (for PDF or DocuWorks) cannot be used simultaneously.
- You cannot use this feature when retrieving data via Network Scanner Utility 3
- Select [Color] for [Color Scanning].

- This feature is available when [Color Scanning] is set to [Color], when [Resolution] is set to [200 dpi] or [300 dpi], and when [File Format] is set to [PDF] or [DocuWorks].
- You cannot change the number of colors. (The maximum is 16 colors.)
- You can attach thumbnails to files when [Specific Color] is selected, but the thumbnails are displayed in full color.
- Monochrome images scanned with the Specific Color feature may be different from the ordinary monochrome images in the image quality.
- The Specific Color feature is not suitable for documents with graphs and photographs, or with multiple colors. For those documents, use MRC High Compression.

■ Obtaining Addresses from LDAP Server

- Recipients' addresses that can be obtained from the LDAP server for the E-mail service are e-mail addresses, Internet fax addresses, and fax numbers.
- The Address Book that can be used for the E-mail service in Job Flows is the Address Book stored in the machine.

■ Restrictions on Internet Explorer

- When you access a URL that is sent by e-mail using Internet Explorer, a File Download pop-up window is displayed. Start the download within three minutes after the pop-up window appears, otherwise an incomplete file will be left in your computer.
- When you use the Store & Send Link service by selecting [DocuWorks] and [Single File for Each Page] for [File Format], you may not properly obtain files from the destination URL if [Automatic prompting for file downloads] is set to [Disable] under [Tools] > [Internet Options] > [Security] > [Custom Level] > [Automatic prompting for file downloads] with your Internet Explorer.
- When you use Internet Explorer, even if you click "To delete file, click here." in the [Document Acquisition] screen of the Store & Send Link service, file deletion may not be performed. In this case, use another browser than Internet Explorer to delete the file.

■ Split Files

You cannot select [Single File for Each Page] when using the Store to Folder or JobFlow Feature.

■ Thumbnail View

- Files in a folder may not be displayed in thumbnail view in the following cases. In those cases, display them in list view.
  - Some file is not displayed in thumbnail view even though it is stored in the folder.
  - Characters and images are not correctly displayed because they are scaled down from the actual sizes.
- The orientation of an image displayed in thumbnail view depends on which orientation the document was stored in.
- If the power is cut off immediately after a scanned file is stored in a folder, or if the hard disk space is insufficient to display thumbnails, files in the folder may not be displayed in thumbnail view. In that case, display them in list view.

■ FTP Transmission for Scan to PC

- By factory default, [Passive Mode] is selected as a transfer mode to send scanned data via FTP from the machine.

- You can switch the FTP transfer mode using CentreWare Internet Services, but cannot switch the mode per job or per destination FTP server.
- Depending on your network environment, operations may not be performed properly unless the FTP transfer mode is switched from [Passive Mode] to [Active Mode].
- When [IP Filtering] is enabled, make sure to switch the FTP transfer mode to [Active Mode].

  In [Passive Mode], the server permits a client to connect to the port for the data transfer so that the client starts the connection. [Passive Mode] is commonly used and also has lower security risk than [Active Mode].

  In [Active Mode], a client notifies the server of the port number for the data transfer so that the server starts the connection. [Active Mode] may incur a security risk such as impersonation by third parties.

  In addition, the proper connection may not be available in a firewall environment. In such a case, select [Passive Mode].

■ SMB Transfer for Scan to PC

- If you use Mac OS X 10.7 Lion, contact our Customer Support Center and ask if your operating system is supported.
- If you use OS X 10.8 Mountain Lion, contact our Customer Support Center and ask if your operating system is supported.

■ Store to WSD

Note

- WSD stands for Web Services on Devices.

- When the WSD scan port is not activated, the [Store to WSD] button is not displayed in the Services Home screen. Enable the WSD scan port to use the Store to WSD feature on the machine.
- Store to WSD feature requires the scanner driver included as standard in Windows Vista Service Pack 2 or later. When an appropriate operation system is installed, you can operate scan using [Windows Fax and Scan] or [From scanner or camera] in [Microsoft Paint].
- [Next Original] is not displayed when using WSD scan.
- You cannot execute multiple jobs simultaneously. If you execute a job during the scan job, the latter job is not accepted.
- When using WSD scan, you cannot change layout settings by the machine. Configure the settings on the computer using the scanner driver included as standard in Windows.
- Press [Operate From Computer] to display the standby screen. If the standby screen is not displayed, a scan job will not be started even when the network computer recognizes the machine. While the standby screen is displayed, the machine does not execute Auto Clear or enter the Power Saver mode.
- After being scanned, remove the originals and then select [OK] on the [Remove Your Originals] screen. You cannot execute any operation without selecting [OK].
- Store to WSD feature requires the default scanner driver included as standard in Windows Vista or later. Setting items are different from those for the dedicated scanner driver.

Notes and Restrictions on the Use of the Fax Feature

■ Settings on Manual Fax Transmissions

Manual fax transmissions are performed in accordance with the settings in [Fax Defaults].

If you change settings on the fax screen before the calling screen appears,the settings become effective.

■ Unavailable Fax Functions

The machine does not support the following functions.

- ISDN connection
- G4 communication
- Relay station role for the relay broadcast
- Specifying all the addresses at a time using the wild card (*)
- Telephone function via an optional line

■ Unavailable Fax Functions

The Internet Fax feature does not support the following functions.

- Manual send
- Remote Polling
- Relay Broadcast
- Sorting received faxes by folder (Folder Selector)
- Direct Fax

■ Relay Broadcast

The machine has the function of an initiating station but does not have the function of a relay station.

The machine does not support G4 communications, but if a relay station supports G4 communications, the machine can select a G4 communication function that a relay station performs as an instruction for relay broadcast.

■ Features Supported by F Code Communication

F Code communication supports the following features: the Send Fax - Remote Folder, Secure Polling, Store File - Local Folder, Relay Broadcast, and Remote Relay Broadcast features.

■ Fax Immediate Reception

If the machine's memory capacity becomes insufficient to receive fax data, the machine automatically switches into immediate reception mode. In this mode, the machine outputs received documents on a page-by-page basis; each document page is output immediately after the machine finishes receiving it. However, if the machine receives large data, such as an A3 size photo with many halftone levels, the machine may not print it even after the machine finishes receiving it. In that case, press the <Stop> button, or turn the machine off and then on again, to have the machine print the document.

■ Skip Blank Pages Feature

The accuracy of detecting blank pages depends on the status of the page. For example, if a blank page background shadows, the machine may not determine the page as a blank.

■ Address Type Settings When Registering on the Address Book

The following address types can be selected when you add an address to AddressBook:

Fax, IP Fax (SIP), Internet Fax, E-mail, and Server (FTP/SMB)

When you register an address on the Address Book, select an address type in accordance with the service. The address book entry registered with the wrong address type cannot be selected from the original service.

■ Simple Fax

- While you are making the settings for [Fax/Internet Fax], you cannot switch to the [Simple Fax] screen. To switch to the [Simple Fax] screen, you must return to the Services Home screen. Once you return to the Services Home screen, the settings you have made will be cleared.
- You can re-enter a recipient after entering the recipient to prevent sending a fax to a wrong address.
- You cannot use address numbers to specify recipients for Broadcast Send, group dial numbers, the Address Book, and wildcards.

■ Printer Lockout

If the power is switched off when both [Set Lockout Duration] and [Allow User to Lock Out] are selected in [Printer Lockout], the manually configured [Lock Out Printer] setting is cleared. If the power is switched on again, [Set Lockout Duration] will be effective regardless of the [Lock Out Printer] setting.

■ Activity Report

- The number of a smart card cannot be displayed.

■ Direct Fax

When sending a fax using the Direct Fax feature, the recipient name is printed on the Activity Report, Confirmation Options, Transmission Report - Job Undelivered,Broadcast Report, and Job History Report. If you want to print the telephone number or SIP URL instead, leave the text box of [Name] on the print driver screen blank. Note that the column of [To] on the Fax Cover Page is also left blank under this setting.

When a recipient's name of Direct Fax exceeds 18 single and double-byte characters, the 19th character and after will be truncated on the Job History Report.

■ Prevention of Wrong Transmissions for Direct Fax

- After specifying a recipient using an address number (Speed Dial) or selecting from the Address Book, the [Settings of Reentering Fax Address] dialog box will not be played even when [Settings of Reentering Fax Address:] is set to [On] on the [Configuration] tab on the [Properties] screen.
- You cannot enter a fax number when [Restriction of Specifying Fax Address] is set to [Speed Dial Only] or [Phonebook Only] on the [Configuration] tab on the [Properties] screen. Specify a recipient using an address number (Speed Dial) or selecting from the Address Book under this setting.
- You cannot specify multiple recipients when [On] is set for [Restrict Multi- Address Fax Transmission:] to prevent faxes from being sent to undesired destinations.

Notes and Restrictions on the Use of the E-mail/Internet Fax Feature

■ Notes on E-mail Transmissions

"The job has been sent." that is displayed on the confirmation screen, Activity Report, or Confirmation Options indicates that an e-mail has been sent to the SMTP server configured on the machine for transmitting e-mail. The e-mail, however, may not reach its destination for some problem on the transmission path of the Internet. In this case, the machine is not notified of such transmission error. After sending an important e-mail, we recommend that you confirm its reception, such as by calling the recipient.

■ Feature Combinations when Transmitting an Internet Fax

◆ [Resolution] on the [Fax/Internet Fax] screen

When [TIFF-S] is selected for [Internet Fax Profile] on the [Fax/Internet Fax Options] screen, [Superfine (400 dpi)] or [Superfine (600 dpi)] cannot be selected.

Reference

- For information on Internet fax profiles, refer to "Fax" > "Fax/Internet Fax Options" > "Internet Fax Profile (Specifying Internet Fax Profiles)" in the User Guide.

◆ [Starting Rate] on the [Fax/Internet Fax Options] screen

The communication mode can be specified only when sending e-mail using the Fax Gateway feature. For other cases, e-mail is sent via G3 Auto.

Reference

- For more information on the Fax Gateway feature, refer to "4 Fax" > "About Internet Fax" > "Useful Features" > "Sending Internet Fax to regular fax machines via a relay station" in the User Guide.

◆ [Original Size] on the [Layout Adjustment] screen

When [TIFF-S] is selected for [Internet Fax Profile] on the [Fax/Internet Fax Options] screen, an Internet fax is sent in A4 even if a size larger than A4 is specified.

Reference

- For information on Internet fax profiles, refer to "4 Fax" > "Fax/Internet Fax Options" > "Internet FaxProfile (Specifying Internet Fax Profiles)" in the User Guide.

■ Internet Fax and Direct Internet Fax

- You can switch between the Internet Fax and Internet Fax Direct features in the System Administration mode, however, you cannot use both features simultaneously. For switching between the features, contact your system administrator.
- Both the Internet Fax and E-mail services can be used at the same time. The Internet Fax Direct and E-mail services can also be used simultaneously.
- The following recipient machines (models with the Fax feature) can establish a peerto-peer communication with the machine for the Internet Fax Direct feature:
  - DocuCentre-V C2265/C2263
  - ApeosPort-V C7776/C6676/C5576/C4476/C3374/C2276
  - DocuCentre-V C7776/C6676/C5576/C4476/C3374/C2276
  - ApeosPort-V C7775/C6675/C5575/C4475/C3373/C2275
  - DocuCentre-V C7775/C6675/C5575/C4475/C3373/C2275
  - DocuCentre-V C7780/C6680/C5580
  - ApeosPort-IV C5575/C4475/C3375/C3373/C2275
  - DocuCentre-IV C5575/C4475/C3375/C3373
  - ApeosPort-IV C7780/C6680/C5580
  - DocuCentre-IV C7780/C6680/C5580

- ApeosPort-IV C4430
- DocuCentre-IV C4430
- DocuCentre-IV C2260
- ApeosPort-IV C5570
- DocuCentre-IV C5570
- ApeosPort-IV C4470
- DocuCentre-IV C4470
- ApeosPort-IV C3370
- DocuCentre-IV C3370
- ApeosPort-IV C3371
- DocuCentre-IV C3371
- ApeosPort-IV C2270
- DocuCentre-IV C2270
- ApeosPort-III C4405
- DocuCentre-III C4405
- ApeosPort-III C3305/C2205
- DocuCentre-III C3305/C2205
- ApeosPort-III 4000/3000
- DocuCentre-III 4000/3000
- ApeosPort-III 7000/6000/5000
- DocuCentre-III 7000/6000/5000
- ApeosPort-III C4400
- DocuCentre-III C4400
- ApeosPort-III C3300/C2200
- DocuCentre-III C3300/C2200
- DocuCentre-III 4000/3000
- ApeosPort-II 7000/6000/5000
- DocuCentre-II 7000/6000/5000
- ApeosPort-II C7500/C6500/C5400
- DocuCentre-II C7500/C6500/C5400
- DocuCentre-II 4000/3000
- Papered 4000/3000
- DocuCentre-II C4300/C3300/C2200
- ApeosPort-II C4300/C3300/C2200
- ApeosPort C7550 I/C6550 I/C5540 I
- ApeosPort 750 I/650 I/550 I
- ApeosPort C4535 I/C3626 I/C2521 I
- ApeosPort 450 I/350 I
- DocuCentre Color f450/f360/f250
- DocuCentre f285/f235

- When [Resend Attempts] is set to [On] and the status of the Internet Fax Direct feature enters Resend Required, the subsequent jobs will not be executed until the jobs in Standby status finish.
- Transmission results of Internet faxes cannot be listed on Transmission Report - Job Undelivered or Transmission Report by recipients. Transmission results of Internet Direct faxes can be listed on the reports.

■ Internet Fax Profiles

◆ When specifying an Internet fax profile

The Internet fax profile that can be processed varies depending on the machine that the recipient uses. When specifying an Internet fax profile, confirm whether it can be processed by the recipient's machine.

◆ When an Internet fax profile not supported by the recipient's machine is specified

If the Internet fax profile you specified is not supported by the recipient's machine, the image you sent cannot be displayed or printed on the recipient's machine. Before using an Internet fax profile, confirm if it can be processed by both your machine and the recipient's machine.

◆ TIFF files and Internet fax profiles that can be processed upon Internet fax reception

- TIFF file format: TIFF-FX (RFC2301)
- Internet fax profile: TIFF-S, TIFF-F, TIFF-J, TIFF-C

When the machine receives unsupported internet fax profile, the file may not be printed. When the machine receives TIFF-C, the file will be printed in B&W.

Note

- Communications and Information network Association of Japan (CIAJ) confirms the use of image-/tiff-fx.

◆ Transmission conditions for broadcast transmission

- When sending a document via a broadcast transmission, it can be sent to both Internet fax and regular fax addresses at the same time. To Internet fax addresses, the document will be sent by e-mail, and to regular fax addresses, the document will be sent by fax.
- When the transmission conditions are different for each address, set all addresses to the following settings:
  - Transmission mode:G3 Auto
  - Internet fax profile :TIFF-S
  - Read/delivery receipt:None

■ E-mail Forwarding

If the fax you received is a JBIG-compressed image, and if the Internet fax profile of the forwarding destination is set to TIFF-F, the machine converts the image into MH format when forwarding. When the Internet fax profile is TIFF-S, the data is forwarded with its size and resolution unchanged.

■ S/MIME Communication for Internet Fax

S/MIME Encryption cannot be used for the features that use special e-mail addresses, such as the reception of Internet fax with a folder specified and a fax transfer for e-mails received by Internet Fax.

■ S/MIME Untrusted E-mail Reception Settings

When [Receive Untrusted E-mail] or [Receive Untrusted Internet Fax] under [Connectivity & Network Setup] > [Security Settings] > [S/MIME Settings] is set to [No] in the System Administration mode, you cannot receive the confirmation result even if [Read Receipts] is set to [On].

■ Fax Gateway Feature

This feature can only be used when the e-mail receiving protocol is SMTP on the Internet Fax-enabled machine that faxes are sent to.

If an e-mail was sent by converting it into fax, and if it was not delivered successfully to the recipient, the e-mail that was received originally will be deleted.

Reference

- For more information on the Fax Gateway feature, refer to "4 Fax" > "About Internet Fax" > "Useful Features" > "Sending Internet Fax to regular fax machines via a relay station" in the User Guide.

■ Restrictions on Paper Selections upon Internet Fax Reception

The machine determines whether a TIFF file attached to an e-mail complies with the content type defined in RFC2301 and RFC3250. If the content type is compliant with RFC2301 and RFC3250, the machine selects appropriate paper to render the file image as a fax-received image.

Even when the file was received via Internet Fax, if its content type is not compliant with FRC2301 or RFC3250, the machine will not properly select paper for it. For example, an incoming fax that is A4 size may be printed on B4 paper instead.

Such problems may improve depending on the usage. Contact our Customer Support Center for further information.

■ Resolution when group is specified

When you specify a group using Internet Fax, [Resolution] for the address numbers registered as a group is not applied. The resolution set by [Resolution] in the [Fax/Internet Fax] screen is transmitted to the machine.

■ Restrictions on the E-mail Server

Depending on the system environment (such as the restrictions on your e-mail server), large e-mail may not be delivered successfully. When sending a large e-mail by splitting it, check the capacity of your system environment and of the recipient's environment.

If the data size is still too large to send, reduce their size by lowering the image resolution or transmission resolution.

■ Network Security

We do not guarantee the security of any information disclosed over the network.

■ Setting the System Environment for E-mail Service

To send or receive e-mail, the system environment of the machine must be set for the E-mail service. Set up the system environment such as SMTP, POP3, and DNS servers, as required.

■ Notes on Security

E-mail uses the Internet, which is a network connecting computers worldwide, as its transmission path. Thus, since other signals also are sent over the Internet, you must pay attention to security to prevent third parties from reading or tampering of your e-mail.

Consequently, to transmit important information, we recommend that you use other transmission methods that guarantee security. In addition, to avoid the reception of unwanted e-mail, we recommend that you do not disclose your e-mail address to third parties unless necessary.

■ Preventing Receipt of Unwanted E-mail

The machine provides a feature that prevents the reception of unwanted e-mail sent from third parties.

By specifying the domains from which e-mail can be received, you automatically can reject e-mail sent from other addresses.

Reference

- For information on restricting domains from which e-mail can be received, refer to "Domain Filtering" (P.226).

■ Notes on E-mail Receptions

A large volume of e-mail may not be printed if the memory capacity is insufficient. In this case, increase the memory size or ask the sender to lower the resolution.

■ Notes on E-mail Reception when [Split by Data Size] is specified

When [Split by Data Size] is specified as the e-mail splitting method, even if you receive the split e-mail, you cannot reconstruct and print it.

■ Notes on E-mail Transmission when [Split by Data Size] is specified

When [Split by Data Size] is specified as the e-mail splitting method, split the data so as to enable e-mail reception with e-mail software corresponding to the Message/Partial content type.

■ Job Counter Report

If you specify multiple different [Pages per Side] settings using the Build Job feature, the numbers of pages displayed for [2 Pages] and [Greater than 2 Pages Up] displayed on the Job Counter Report are calculated according to the latest N-up setting you specify.

Example 1:

When you select [2 Pages] for Document 1 (4 pages) and [Off] for Document 2 (2 pages), both Documents 1 and 2 are set to [Off] and the number of printed pages is calculated as follows:

- Total pages: 4
- 2 up: 0

Example 2:

When you select [Off] for Document 1 (4 pages) and [2 Pages] for Document 2 (2 pages), both Documents 1 and 2 are set to [2 Pages] and the number of printed pages is calculated as follows:

- Total pages: 5
- 2 up: 5

On ApeosWare Log Management (sold separately) or ApeosWare Accounting Service (sold separately), the numbers of pages for 2in1, 4in1, and 8in1 are also calculated in the same way as described above.

The meter on the [Billing Information] screen calculates the number of printed pages correctly regardless of the [Pages per Side] setting.

■ Folder Passcode

You do not need to specify the passcode of a recipient when sending an IP Fax (SIP) to a remote folder. Thus, the passcode enclosed in "\" or "/" is not replaced by "*" as with that of regular faxes.If you select an IP Fax (SIP) by mistake and specify the passcode of a recipient when you send a fax or an Internet fax, the passcode is displayed on the touch

panel screen, the Job Status screen, and a report. Be sure to check the type of fax before sending a fax to a remote folder.

Note

- Communications and Information network Association of Japan (CIAJ) confirms the use of image-/tiff-fx.

Notes and Restrictions for IP Fax (SIP)

This section describes notes and restrictions to observe when using IP Fax (SIP).

■ IP Fax (SIP) Feature

- In IP Fax (SIP) transmissions, protocols used for call connection are SIP and for data communication is T.38. Other IP Fax transmissions protocols, such as H.323 standard and deemed voice communication method, are not supported.
- IP Fax (SIP) cannot be performed on SSL/TLS communication.
- In IP Fax (SIP) transmissions, authentication is performed between the machine and a SIP server.

  The authentication supports the digest authentication only. NTLM and the other authentication methods are not supported.
- The number of simultaneous connections for IP fax (SIP) is one. The machine cannot perform sending and receiving an IP fax (SIP) at the same time.
- Up to two SIP servers are available for a registrar server and a proxy server, respectively.
- The IP address of a SIP server can be resolved using DHCP or DHCPv6 (The IP address of the SIP server must be set to the option number "120" of a DHCP or a DHCPv6 server). However, observe the following considerations:
  - If an IP address is automatically resolved using DHCP in an IPv4 environment, set [IPv4 - IP Address Resolution] to [DHCP] or [DHCP/AutoIP].
  - Even when an IP address can be resolved automatically using DHCP or DHCPv6, port number, login user name, login password, and server type cannot be resolved automatically. Configure these items manually.
  - If an IP address is resolved automatically, the same IP address is assigned to a proxy server and a registrar server. If you use different IP addresses for a proxy server and a registrar server, configure the IP addresses manually.
  - If multiple IP addresses are resolved automatically, assign the first IP address to a primary proxy/registrar server and the second to a secondary proxy/registrar server. The third and subsequent addresses are not used.
- Only ToS (IP Precedence/DSCP) is supported as a QoS control method, and other QoS controls including CoS are not supported. Set the priority of IP packet transmission in [Prioritize IP Packets] to perform QoS control for the machine.

■ Recipients

- The communication between IP Fax (SIP) devices is available for our compatible machines in a corporate intranet. (Able 1407 λ is not available.) For information on the compatible machines, contact our Customer Support Center.

■ SIP Server

The following e-mail applications can transmit e-mails between the machine and a computer:

- Cisco MCS 7800 series (Cisco Unified Communications Manager 6.0/6.1/7.1/8.0 is installed) is validated as a SIP server available for the machine.
- The gateway may not work properly over an analog line depending on your environment.

- If you use a SIP server manufactured by Cisco Systems, Inc., only UDP can be used as T.38 protocol.
- SIP servers do not work on IPsec communications.
- SIP servers do not work in an IPv6 environment.
- SRST that works on routers such as CISCO2801 manufactured by Cisco Systems, Inc. is not supported.
- Cisco Call Manager Express that works on routers such as CISCO2801 by Cisco Systems, Inc. is not supported.
- If you use a SIP server manufactured by Cisco Systems, Inc., you can specify only IPv4 address character strings of the SIP server on the right side of @ in [SIP User ID (Sign-in Name)]. If you specify IPv6 address character strings, FQDN character strings, and SIP domain name character strings, the SIP server does not work.
- When a SIP server is configured as a SIP terminal of the machine on the server, if settings other than specified are configured, the SIP server does not work as the SIP terminal.
- For a SIP server manufactured by Cisco Systems, Inc., an address retention period is fixed to 120 seconds. This value cannot be changed even if Timer Register Expires value is changed.

■ VoIP Gateway

- Cisco ISR 2800 series (with IOS 12.4) is validated as a VoIP gateway available for the machine.
- If you use a VoIP gateway manufactured by Cisco Systems, Inc., only UDP can be used as T.38 protocol.
- VoIP gateways do not work on IPsec communication.
- VoIP gateways do not work in an IPv6 environment.
- If settings other than specified by Fuji Xerox are configured for a dial peer or a voice port on a VoIP gateway, the VoIP gateway does not work.
- If a part of transferred data is lost on a network, a part of image may be missing or be getting stacked. To avoid these, the ECM mode is effective. The machine can always use the ECM mode, however, you cannot use the mode depending on the VoIP gateway settings. Consult your network administrator whether the ECM mode is available.

■ NAT/NAPT

Communication protocols that transmit UPnP, TURN, STUN, ICE, and UDP hole punching in SIP communications are not supported. IP Fax (SIP) does not work in an environment that uses NAT/NAPT devices including ALG.

Notes and Restrictions when Connecting with Internet Service Provider

This section describes notes and restrictions to observe when using features that transmit e-mails or Internet faxes using an Internet service provider (ISP).

The features related to e-mail are as follows:

- E-mail
- E-mail Notification Service
- Internet Fax

■ Notes and Restrictions on Accessing ISP

Observe the following notes and restrictions when connecting the machine to ISP:

- Dial-up connection is not supported. Continuous connection is required.
- Connect the machine in an environment using IP masquerade. Assigning a global IP address to the machine is not supported.
- Be sure to assign an exclusive e-mail account to the machine for POP reception. Sharing an e-mail account with other users may cause troubles.
- Be sure to set size limitation for sending e-mail. Although the applicable e-mail size may vary depending on the ISP used, we recommend that you set a small value.
- Although continuous connection other than ADSL or cable connection is also supported, the reception of image data significantly burdens the machine.
- SMTP reception is not supported. This machine supports only POP reception.
- When installing the machine in an environment that is operating a mail transfer agent (MTA) in a private segment, set the machine to adapt to the operation system being used.
- For information about supported ISPs, contact our Customer Support Center.
- When received via POP, the fax cannot be sent using the Fax Gateway feature. This is because POP receiving does not forward an Internet fax document received by e-mail to the fax machine.

■ Feature Specifications

Details of the features related to e-mail are as follows:

- Transmission specifications

  Supported protocol : SMTP

  Port number : 25 (default)

- Authentication for transmission

  SMTP authentication : AUTH GSSAPI (only for Kerberos), AUTHNTLMv2, AUTH NTLMv1, AUTH PLAIN, AUTH LOGIN, and AUTH CRAM-MD5

  POP before SMTP : Plain and APOP

  Waiting time for POP authentication : cannot be changed

  Encryption communication (SSL): supported

- Receiving specifications

  Supported protocol : POP3

  POP3 port number : 110 (default)

  Authentication method for POP3 : Plain and APOP

  E-mail processing after POP3 reception: deletes e-mail received from a server after reception. Settings to store e-mail on the server is not supported.

  Encryption communication (SSL):not supported

Note

- IMAP4 is not supported.

■ IP Address Settings

The machine does not support a global IP address. Be sure to use the machine in an environment using IP masquerade.

◆ Operating with fixed address

Register the machine's IP address on a router or a server managing IP addresses for domain control servers.

◆ Operating with DHCP

Setting is not required. Depending on settings of the router and the DHCP server, registration may be required. Confirm operation rules for the router and DHCP server you are using. When access is restricted by MAC address, registration on the DHCP server may be required.

■ Settings from the Control Panel

Before you use the E-mail service, set the maximum data size for sending e-mail on the control panel. For more information on the maximum limit, refer to the ISP guidelines. The recommended value is 1 to 2 MB.

In the System Administration mode, select [Tools] > [System Settings] > [Email/Internet Fax Service Settings] > [E-mail Control] > [Maximum Total Data Size] to configure the setting.

Reference

- For more information on setting, refer to "Maximum Total Data Size" (P.264).

Suitable image sizes are as follows:

Reference

- A4 full-color 200 dpi with standard compression: around 700 KB
- A4 full-color 200 dpi with high compression: around 400 KB
- A4 black and white 200 dpi (text document) : around 25 KB
- A4 black and white 200 dpi (text & photo document):around 200 KB

Note

- The sizes described above are applicable when sending e-mail. The actual size may be different.

■ Settings from CentreWare Internet Services

Reference

- For more information on settings to be configured on CentreWare Internet Services, click [Help] at the upper right corner of the CentreWare Internet Services screen to see help.

Important

- To display the online help for CentreWare Internet Services, users need to have the environment to connect to the internet. The communication fee shall be borne by you.
- Set [Polling Interval] to at least 10 minutes when connecting to ISP.

Notes and Restrictions on the Interrupt Mode

If you press the <Interrupt> button while printing, the machine temporarily stops printing and enters the Interrupt mode.

Note

- However, if the machine is scanning a document while printing, the print job cannot be interrupted.

Jobs can/cannot be executed during interruption are as follows:

Job		Job Instruction from the Control Panel*1	Job Execution
Copy		Required	O
Print	Printing of a document*2 instructed from a client computer	Required*3	O
	Printing of a document*4 instructed from the <Job Status> button > [Secure Print Jobs & More]	Required	O
Fax	Fax transmission, Broadcast Send	Required	O
	Store for Poling	Required	O
	Incoming Fax Print	Required*3	O
	Printing of a document in the Public Folder ([Job Status] > [Secure Print Jobs & More] on the control panel)	Required	O
Direct Fax	Direct Fax transmission	Not required	△
Internet Fax	Internet fax Transmission	Required	O
	Internet fax reception/printing	Required*3	O
	Internet fax reception/Store Internet fax - Local Folder	Not required	△
	Forwarding an incoming Internet fax to a regular fax machine	Not required	△
	Forwarding an incoming fax to an Internet fax	Not required	X
Scan	Store to Folder, Scan to PC, E-mail, Network Scanning, Store & Send Link, and Store to USB	Required	O
Report/List	Automatic printing of a report/list other than a Job History Report	Not required	X
	Automatic printing of a Job History Report	Not required	O
	Printing of a report/list instructed from the <Machine Status> button > [Machine Information] > [Print Reports]	Required	O
Folder	Automatic forwarding of a stored file, automatic fax/Internet fax transmission	Not required	X

Job		Job Instruction from the Control Panel*1	Job Execution
Folder	Printing of a stored file (Fax for Secure Polling/Store Fax - Local Folder/Store Internet Fax - Local Folder) instructed from the control panel	Required	O
	Printing of a stored file (scanned file/ print file) instructed from the control panel	Required	X
	Automatic printing of a stored file	Required*3	O
Job Flow Sheet	Execution of a job flow sheet instructed in [Send from Folder] or [Job Flow Sheets] on the touch screen	Required	O

O : The job can be executed during the Interrupt mode.
X: The job cannot be executed during the Interrupt mode.
△ :The job can be accepted from a client or another machine, but the job cannot be executed during the Interrupt mode.

*1 : The job instruction from the control panel is required/not required to execute the job.
*2 : Normal printing, first set of Sample Set, Delayed Print (auto print)
*3 : During interruption, any document displayed as a pending job on the [Job Status] screen can be printed by selecting [Promote Job]. When priority printing is instructed during interruption, the next priority printing is disabled until the instructed print job is completed.
*4 : Secure Print, Private Charge Print, Sample Set, Delayed Print, or Charge Print

Note

- The followings jobs are executed regardless of the Interrupt mode.
  - Automatic fax transmission (Send Fax - Remote Folder)
  - Fax reception

Notes and Restrictions on Folders

■ Printing Scan Files

When you print files in a folder such as the following, it may take long to output the first page:

- Files with multiple pages
- Files with colors or saved in high resolution

■ Retrieving Files in Folder from CentreWare Internet Services

- Files in a folder can be retrieved in DocuWorks or PDF format from CentreWare Internet Services, but DocuWorks and PDF files that are encrypted or with signature attached cannot be retrieved from CentreWare Internet Services.
- When you retrieve a file in PDF format from CentreWare Internet Services, the PDF file cannot be optimized for Web view.

Notes and Restrictions when Connecting to Internet or Intranet

■ Internet/Intranet Connection

Depending on the web server, server application, proxy server, and firewall, you may not be able to connect to the Internet or intranet.

To connect to the Internet or intranet using a third party server application, proxy, or firewall, the following requirements must be met:

- Support Windows Server 2003, Windows Server 2008, Windows Server 2008 R2, Windows Server 2012, Windows Server 2012 R2, Windows Vista, Windows 7, Windows 8, or Windows 8.1

Notes and Restrictions when Operating from Computers

■ Supported OS

There are notes and restrictions on Microsoft Windows Server 2003 x64 Editions, Microsoft Windows Vista x64 Edition, Microsoft Windows Server 2008 x64 Editions, Microsoft Windows 7 x64 Edition, Microsoft Windows Server 2008 R2 x64 Editions, Microsoft Windows 8 x64 Edition, Microsoft Windows 8.1 x64 Edition, Microsoft Windows Server 2012 x64 Editions, and Microsoft Windows Server 2012 R2 x64 Edition Drivers. For notes and restrictions on the supported operating systems, refer to our Web site before using the operating systems.

■ Restrictions on Macintosh (standard)

- In Macintosh environment, the Scan features using the Direct Fax feature and a TWAIN scanner driver cannot be used.
- The print driver for Max OS X adopts the Plugin driver, which enables you to make the settings for the authentication information and to use the Secure Print feature.

■ Restrictions on Macintosh (the Adobe PostScript 3 Kit (optional))

To print using PostScript, the Adobe PostScript 3 Kit (optional) is required.

- Because the print drivers for Mac OS X 10.5/10.6, Mac OS X 10.7 Lion, OS X 10.8 Mountain Lion, OS X 10.9 Mavericks, and OS X 10.10 Yosemite adopt Plug-ins, the User Details Setup, Secure Print, Sample Set, Delayed Print, and Print Stored File features are available.

■ Print Driver for Mac OS X

- Mac OS X 10.5/10.6, Mac OS X 10.7 Lion, OS X 10.8 Mountain Lion, OS X 10.9 Mavericks, and OS X 10.10 Yosemite is supported.
- The Direct Fax feature cannot be used.
- There is neither the feature to adjust image quality nor to save toner. There are also some limitations, for example, in paper size settings and paper types. To fully utilize the Print feature, install the Adobe PostScript 3 Kit(optional).

■ Direct Fax for Mac OS

- Documents in various sizes are not supported.
- When sending a document of different orientations using this feature, the machine may divide the document into multiple jobs in each size. (It depends on the application you use.)
- This feature does not support documents with covers.

- If you attach covers to a document on Mac OS, only the cover page is sent to the recipient. Even if you set to output multiple sets, the setting is changed to 1 set automatically.
- The Collate feature is not available.

■ CentreWare Internet Services

- When [CSRF Protection] feature is enabled, CentreWare Internet Services may become inaccessible depending on your browser type, web browser usage situation, and the network environment. In such a case, try to access CentreWare Internet Services from other computer. Be sure to consult your system administrator before disabling the feature. If you have no other computer that can access CentreWare Internet Services, contact our Customer Support Center. CSRF is a type of attack that forces a user to execute unwanted action on a web site in which the user is currently authenticated, via the malicious web site. The [CSRF Protection] feature prevents unwanted actions from being executed on CentreWare Internet Services and changing the machine settings in case the user unknowingly accesses a malicious website.
- The optional hard disk is required to obtain a Job History Report in a CSV format using CentreWare Internet Services. For more information, contact our Customer Support Center.
- Do not edit or change the CSV file (address book data) exported by CentreWare Internet Services, using software such as Microsoft Excel. Some models do not display any warning message when registering the altered data. Since the altered data may be damaged, fax may be sent to undesired recipients.
- The recipient data is added to the Address Book in the machine without deleting registered recipients when you import the data from [Data Import] on [Address Book] tab of CentreWare Internet Services. If you want to change the setting to overwrite mode, contact our Customer Support Center.
- Only the Address Book data exported from [Data Export] on the [Address Book] tab of CentreWare Internet Services is available for importing with [Data Import] on [Address Book] tab.
- When the Authentication feature is used and the characters other than alphanumeric characters are used for the User ID, CentreWare Internet Services is not available.

Notes and Restrictions on Job Flows

■ Job Flow Settings for High Compression Format

- When [MRC High Compression] is set to [On] under [File Format] for the Scan features, select one of the alternatives for each setting item:
  - Color Scanning: [Auto Detect], [Color], or [Grayscale]
  - Resolution: [200 dpi] or [300 dpi]
  - Reduce / Enlarge: [100 %]
  - File Format (without thumbnail specification): [PDF], [DocuWorks], or [XPS]
  - File Format (with thumbnail specification): [DocuWorks] or [XPS]

Important

- If settings other than the above are used, you can register a Job Flow sheet on the machine, but an error occurs when the machine executes the Job Flow and the Job Flow cannot be carried out.

Note

- XPS stands for XML Paper Specification.

■ Addresses Registered on Job Flows

If you specify a speed dial or an address registered on the Address Book when creating a job flow on the machine, any subsequent change of the number or address on the Address Book is not reflected on the job flow created. To transmit to the changed address, you must directly correct the address registered on the job flow.

Notes and Restrictions on the Security Features

■ Allow User to Disable Active Settings (for Forcible Printing Features)

This feature cannot apply to the ordinary print jobs. This feature is applicable to the jobs stored in the machine and then printed by the instruction from the touch screen, such as Copy, Secure Print, Private Charge Print, Print Stored File, Media Print - Text, and Media Print - Photos .

Notes and Restrictions on the Authentication and Accounting Features

■ Notes and Restriction on Authentication and Accounting

- The general shared folders created under the [No Login Required] mode become unavailable after the machine's login type is changed to require login.
- When the machine's login type is set to require login, the private folders and the administrator shared folder can be created. The general shared folder cannot be created.

■ Notes on the User ID setting

If you change the [User ID for Login] setting under [Authentication / Security Settings] > [Authentication] > [User Details Setup], the registered user information including the user-related folders and job flow sheets will be deleted.

■ Notes on Job Status Default Setting

If you set [Hide Job Details] on [Authentication / Security Settings] > [Job Status Default], you cannot stop or delete jobs you instructed. Therefore, you cannot cancel jobs in the case of operational error of copies or wrong transmission of faxes.

■ Remote Authentication using the Smart Card

- Remote Authentication can be performed in an environment where Active Directory is used.
- Change the default realm name only when you want to use a different realm name.

Notes and Restrictions for Using SMB

This section describes notes and restrictions to observe when using SMB.

■ Configuration on the Machine

- IP addresses are managed for the entire system. Configure the settings only after consulting your network administrator.
- The setting of subnet mask and gateway addresses may be required depending on the network environment. Consult your network administrator and configure the required settings.

■ Configuration on the Computer

- IP addresses are managed for the entire system. Configure the settings only after consulting your network administrator.
- When setting the network such as IP addresses with a host used under the Network Information Service (NIS), consult your NIS administrator.

■ SMB Authentication

When an IP address or a host name is used to designate the authentication server for SMB authentication, even if the domain name is incorrect, the authentication succeeds if the correct user name and passcode are entered.

Notes and Restrictions for Using TCP/IP

This section describes notes and restrictions to observe when using TCP/IP (LPD).

■ Configuration on the Computer

- IP addresses are managed for the entire system. Configure the settings only after consulting your network administrator.
- When setting the network such as IP addresses with a host used under the Network Information Service (NIS), consult your NIS administrator.

■ Turning Off the Machine

Check the following points when turning off the machine:

- When [Receiving Buffer - LPD] is set to [Spool to Memory

  All print data spooled within the machine memory, including the data which is being printed, is erased. The print data does not remain when the machine is turned on again.

  However, if the machine was turned off immediately after a computer instructed a print job, the job may remain on the computer. In this case, when the machine is turned on, the data stored on the computer is printed before any jobs instructed subsequently.
- When [Receiving Buffer - LPD] is set to [Spool to Hard Disk]

  All print data spooled in the machine hard disk, including the data which is being printed, is saved. In this case, when the machine is turned on, the data stored on the machine hard disk is printed before any jobs instructed subsequently.
- When [Receiving Buffer - LPD] is set to [No Spooling]

  All print data spooled in the machine receiving buffer, including the data which is being printed, is erased. The print data does not remain when the machine is turned on again.

  However, if the machine was turned off immediately after a computer instructed a print job, the job may remain on the computer. In this case, when the machine is turned on, the data stored on the computer is printed before any jobs instructed subsequently.

■ While Printing

- When [Receiving Buffer - LPD] is set to either [Spool to Hard Disk] or [Spool to Memory]

  If the transmitted print data size exceeds the available capacity of either hard disk or memory, the print data is not received.

  Note
  - When the print data exceeds the receivable size, some computers may immediately re-transmit the print data. In this case, the computer appears to be not operating. Remedy this problem by canceling the print data transmission from the computer.
- When [Receiving Buffer - LPD] is set to [No Spooling]

When the machine receives a print request from a computer, the machine cannot accept print requests from any other computers.

- When a computer's IP address or a computer name is changed

  When you change a computer's IP address or a computer name, queries and cancel processes submitted from the machine are no longer executed correctly. Thus, turn the machine off and on when there is no print data in the receiving buffer.

Note

- From the control panel on the machine, you can cancel print jobs or force the machine to print the jobs remaining in the receiving buffer. For more information on the operation, refer to "11 Job Status" in the User Guide.

Notes and Restriction for Using Secondary Ethernet (Optional)

This section describes notes and restrictions to observe when using Secondary Ethernet (optional).

- The exceptions setting dialog box may be displayed when you access CentreWare Internet Services using FQDN by Ethernet 2 while enabling [HTTP - SSL/TLS Communication].
- The job log does not record Ethernet1 and Ethernet2 separately. You cannot identify which network has transmitted a job.
- The remaining level of consumables and the meter value information transmitted from the machine are identical between Ethernet 1 and Ethernet 2. When you use the software which is not supplied by Fuji Xerox to check the machine usage status, please do not set IP address to avoid the duplication of machine information. Instead of IP address, set the machine-specific information such as UUID depending on the software you use.
- When [LPD Print Queue] is set to [Job Submission Order], no priority of print order occurs between Ethernet 1 and Ethernet 2.
- The submission, status confirmation (lpq), and cancellation (lprm) of print jobs from different hosts which have the same IP address are processed as the same host's request.
- Port 9100 receives a print job from single line at one time even when two Ethernet interface lines are used.
- [Get IP Address from DHCP] of [IPv6 - DNS Server Setup] is available only for [TCP/ IP - Network Settings (Ethernet 1)]. For [TCP/IP - Network Settings (Ethernet 2)], set the DNS server address manually.
- On the [Properties] tab > [Connectivity] > [Protocols] > [TCP/IP] of CentreWare Internet Services, selecting [Enabled] for [Dynamic DNS Registration] of both Ethernet 1 and Ethernet 2 may cause the Dynamic DNS registration to fail. Select [Enabled] only for either Ethernet 1 or Ethernet 2 to use the Dynamic DNS registration feature.

Notes and Restrictions for Using Bonjour

This section describes notes and restrictions to observe when using Bonjour.

■ Supported Environment for Bonjour

Bonjour is available on Printer Setup Tool (Print Center, Printer Setup Utility) of Mac OS X 10.5/10.6, Mac OS X 10.7 Lion, OS X 10.8 Mountain Lion, OS X 10.9 Mavericks, OS X 10.10 Yosemite, or Macintosh computers that use Safari. The Discovery feature of Bonjour is available only within the same subnet.

■ Printer Name

- If you change a printer name or a host name that is already assigned, documents may be printed by a printer that is not selected.
- If a printer name or a host name is duplicated on the same network, one of the duplicated names is automatically changed by adding a number to avoid duplication.
- If you change a printer name or a host name, because of the limitation on the number or type of characters used, a name differing from the designated name may be assigned. We recommend that you not change printer names or host names.

Notes and Restrictions for IPv6 Connection

This section describes notes and restrictions to observe when using IPv6 connection.

- Printing via IPv6 supports the following versions of the operating systems.
  - Windows Vista
  - Windows 7
  - Windows 8
  - Windows 8.1
  - Windows Server 2008
  - Windows Server 2008 R2
  - Windows Server 2012
  - Windows Server 2012 R2
  - Linux distribution that Common Unix Printing System supports IPv6 and is printable
- IPv6 does not support the following protocols:
  - UPnP Discovery
- Some features of SMB are not supported (If you attempt to use services with a NetBIOS name, communication may not be available in some environment).
- IPv6-in-IPv4-tunneling in the machine itself is not supported.

Important

- If [IP Mode] is set to [IPv6 Mode], the IPv6-inIPv4-tunneling cannot be performed.

- If more than one router exist in the same subnet, a communication error may occur.
- In a dual stack environment, some services may cause performance problems depending on the network settings (for example, when you attempt to set the machine to prioritize IPv6 in an environment where the Web server is started with IPv4).
- In a multi-prefix environment (where multiple IPv6 global addresses are used), data transmission from the machine to a device installed on another network may fail.
- In a multi-prefix environment (where multiple IPv6 global addresses are used), an address that is not assigned to the machine may be used for communication.
- The machine may be assigned an unavailable address, such as site local addresses (fec0::) or the documentation prefix (2001:db8::/32), as an autoconfigured IPv6 address or as an IPv6 DNS server address.
- The machine may use the DNS information for IPv4 rather than that for IPv6 if: the machine is in Dual Stack mode, the DNS information for both IPv4 and IPv6 is configured, the machine is to be communicate with a device that is specified using the FQDN, and the machine has just been turned on.
- The machine may display an incorrect machine address. Example: Either the IPv4 or IPv6 address is not displayed in Dual Stack mode. A different IPv6 address is displayed.

- A time synchronization server cannot be specified in IPv6 format. Use the IPv4 format to specify a time synchronization server directly.
- WINS does not support IPv6 communication.
- When a self-signed certificate is used for SSL communication, observe the following restrictions when specifying the printer URL:
  - When specifying the machine by using the domain name (for IPv4 or IPv6): Set the host name and domain name for the machine before creating a self-signed certificate. Example: When the FQDN is "csw.ipv6.domain.local", specify csw for the host name, and ipv6.domain.local for the domain name.
  - When specifying the machine by using the IPv4 address: Import a self-signed certificate that is created in IPv4 or Dual-Stack mode.
  - When specifying the machine by using the IPv6 address: Secure IPP (IPP-S) communication is not available.
- When IPv6 is enabled and IPv4 is disabled on the machine, you cannot specify a storage location for the Browse function of the Scan to PC (SMB) service.
- When the Scan to PC (FTP) service is used, only ASCII characters can be used for file names.
- In the following cases, since the addresses may not be recognized as those of the same machine, the lpq command (for status check) and the lprm command (for canceling) may not be available for LPD print jobs.
  - When simultaneously operating IPv4 and IPv6 addresses with the same host
  - When simultaneously operating multiple IPv6 addresses with the same host
- IPv6 addresses may not be correctly recorded on job logs. Use an IPv4 network for correct logging.
- When searching a device outside the router via SMB, directly specify the address. Multicasting is supported only within a local link (FF02::1).
- In an IPv6 environment without a DNS server, if a computer name is specified in the SMB server settings for SMB authentication, the authentication fails. Specify the IPv6 address directly for a computer name of the authentication server.
- If you specify an IPv6 address as a destination URL using a remote access service, such as DocuShare, the address does not operate correctly. In an IPv6 environment, use a DNS server and specify a remote service's destination URL by using the FQDN.

Notes and Restrictions for Print E-mail

■ Print E-mail

The machine cancels receiving e-mails but does not display error codes when disk space is insufficient.

Passcode Setting for Extended Functions

A passcode is required to use the extended function on the machine.

Available Extended Function and Passcode

Extended Function	Passcode
Extensible Customization Function/custom service	RWHJBEIIAIMQ@

Note

- It takes a few minutes longer to warm-up the machine after you set the passcode to enable the extended function.

Following are instructions for enabling the extended function.

1. Press the <Log In/Out> button on the control panel.

2. Enter the System Administrator's user ID with the numeric keypad or the keyboard displayed on the screen, and select [Enter].

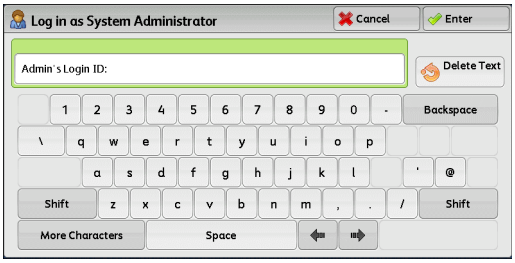

Note

- When a passcode is required, select [Next] and enter the System Administrator's passcode.

3. Select [Tools] on the Services Home screen.

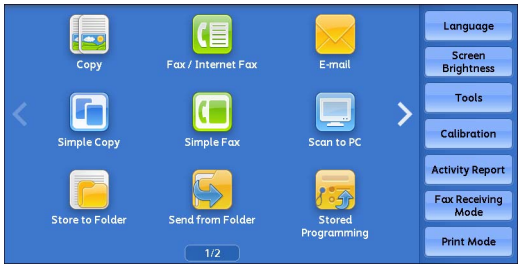

4 Select [Maintenance] in [Common Service Settings] under [System Settings].

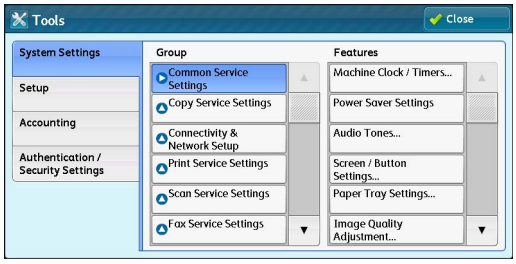

5 Select [Software Options].

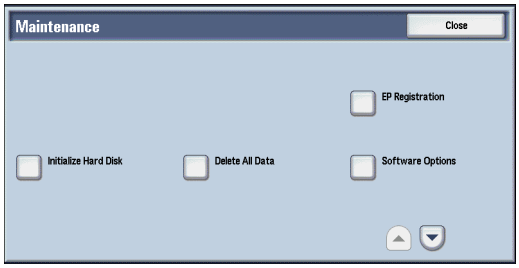

6 Enter the passcode for the extended function with the keyboard.

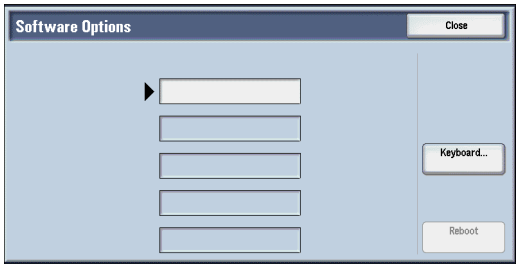

7 Select [Reboot].

The setting of "Fonts to Prevent Garbled Characters on Touch Screen" is completed after rebooting the machine.

If you are setting "Embedded Plug-ins", continue the steps below.

8 After rebooting the machine, start CentreWare Internet Services.

Note

- For information on how to start CentreWare Internet Services, refer to "Starting CentreWare Internet Services" (P.330).

9 Select [Embedded Plug-ins] in [Plug-in / Custom Services Settings] under [Security] from [Properties] tab.

10 Check the [Enabled] checkbox and click [Apply].

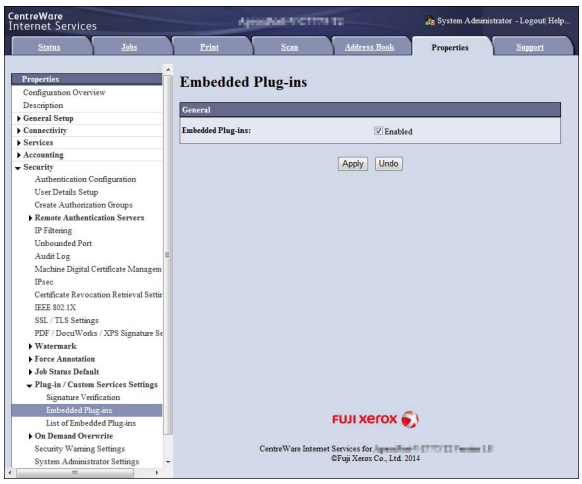

Note

- XPS stands for XML Paper Specifications.

11 Click [Reboot Machine].

After rebooting the machine, the setting will be enabled.

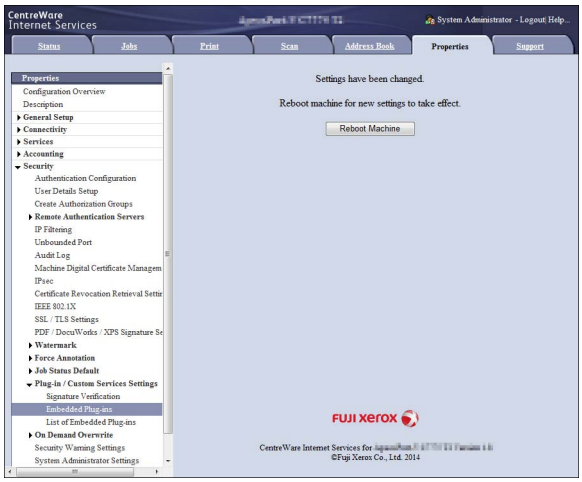

Using the Telephone

This section describes how to use an external telephone connected to the machine with the Fax feature.

Placing a Call

The following describes how to place a call using the external telephone.

To place a call, the following two methods can be used:

- Dialing with the receiver lifted (off-hook dialing)
- Dialing with the receiver resting in the cradle (on-hook dialing)

Off-hook Dialing

The following describes how to place a call with off-hook dialing.

1 Pick up the receiver of the external telephone.

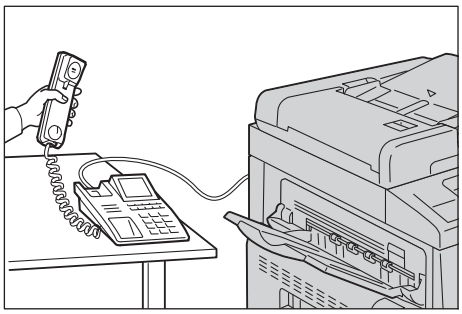

Important

- While the machine is in the Power Saver mode, you cannot place a call using the external telephone. To place a call, press the <Power Saver> button to exit the Power Saver mode.

2 Specify the call destination.

- The call destination can be specified using the numeric keypad, address numbers, or one-touch buttons. The Address Book cannot be used.
- The call destination can be specified also with the keyboard displayed on the screen.

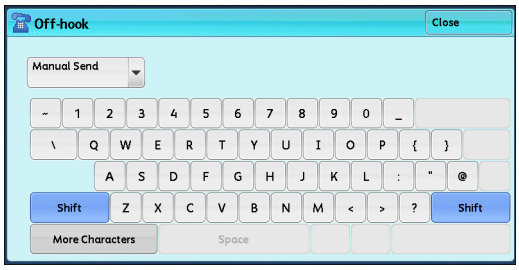

Note

- To disconnect the call, select [Close].
- If your telephone line is set to touch-tone, [Tone (:)] does not appear.
- If you want to send tones (or to use the touch-tone services) while using a pulse line, select [Tone (:)].
- Some touch-tone services may not be available even if you set your telephone to send tones.

3 When the call is connected, start speaking.

4 When the call is finished, place the receiver back in the cradle.

Important

- Be sure that the receiver is placed properly in the cradle. Otherwise, the line remains "busy".

5 Select [Close].

On-hook Dialing

The following describes how to place a call with on-hook dialing. Adjust the line monitor volume so that you can hear the sound clearly.

Reference

- The volume of the line monitor can be changed in the System Administration mode. For more information on how to change the volume, refer to "Line Monitor Volume" (P.152). By factory default, the volume is set to [Soft].

1 On the Services Home screen, select [Fax/ Internet Fax].

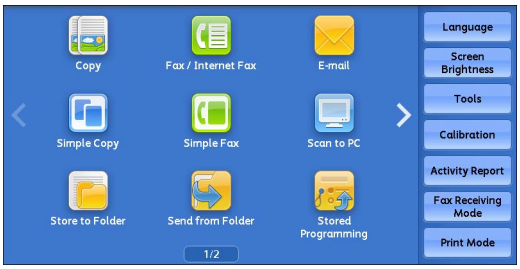

2 Select the [More Options] tab, and then select [On-hook (Manual Send/Receive)].

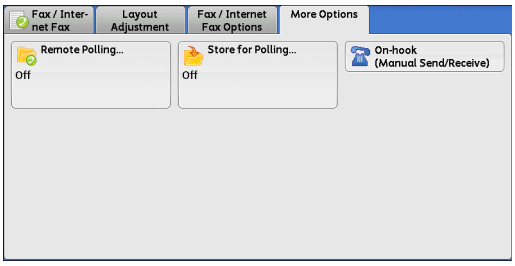

3 Specify the call destination.

- The call destination can be specified using the numeric keypad, address numbers, or one-touch buttons. The Address Book cannot be used.

- The call destination can be specified also with the keyboard displayed on the screen.

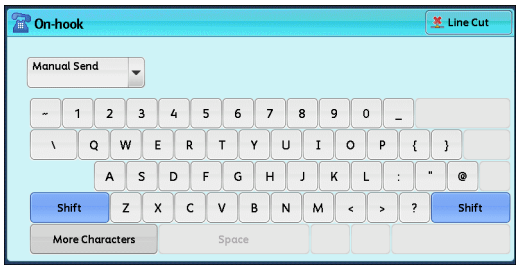

Note

- To disconnect the call, select [Line Cut].
- If your telephone line is set to touch-tone, [Tone (:)] does not appear.
- If you want to send tones (or to use the touch-tone services) while using a pulse line, select [Tone (:)].
- Some touch-tone services may not be available even if you set your telephone to send tones.

4 When the call is connected, lift the receiver and start speaking.

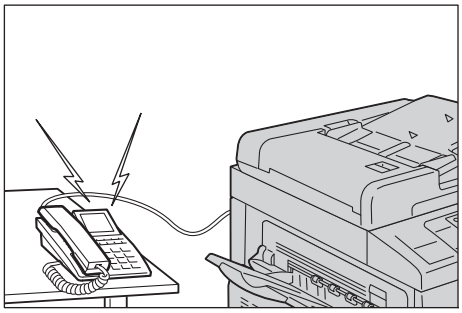

5 After the call is finished, place the receiver back in the cradle.

Important

- Make sure that the receiver is placed properly in the cradle. Otherwise, the line remains "busy".

Activity Report

You can print activity reports to check whether a transmission is successfully completed or not. In the report, a remote terminal name and a result or a status of each operation are recorded by outgoing and incoming transmission.

Reference

- For information on how to print the activity report, refer to "Print Reports" (P.115).

Item	Description
No	The serial numbers for transmissions is shown.
Doc.	Job numbers that the machine automatically assigned to documents when the documents were received.
Remote Station	Information on recipient to which transmission is made is recorded in the following order of priority. • Transmitting (speed dialing) 1 Recipient 2 Remote terminal name 3 G3 ID (including spaces) 4 Tel. No. 5 Communication mode EC (or G3, SG3) When IP Fax (SIP) is used: 1 Recipient 2 Remote terminal name 3 G3 ID (including spaces) 4 SIP address 5 Communication mode IP Fax or IP Fax-ECM • Transmitting (when all digits are dialed) 1 Remote terminal name 2 G3 ID (including spaces) 3 Tel. No. 4 Communication mode EC (or G3, SG3) When IP Fax (SIP) is used: 1 Remote terminal name 2 G3 ID (including spaces) 3 Tel. No. 4 SIP address 5 Communication mode IP Fax or IP Fax-ECM • Receiving 1 Remote terminal name 2 G3 ID (including spaces) 3 Communication mode EC (or G3, SG3) When IP Fax (SIP) is used: 1 Remote terminal name 2 G3 ID (including spaces) 3 Communication mode IP Fax or IP Fax-ECM **Note** • You can set the number of character digits displayed for the recipient whether the first 40 digits or the last 40 digits. For details on setting up, see "Activity Report - Recipient" (P.166). The factory default displays the first 40 digits.
Start Time	The date and time that the communication began are shown. In Batch Send, the start time of the transmission for each document is recorded.

Item	Description
Duration	The duration of the transmission is displayed. In Batch Send, it is the length of time taken to transmit each document is recorded.
Pages	"-" is shown when the number of pages is 0. • Transmitting The number printed on the left side of the slash "/" indicates the number of pages that were successfully transmitted. The number printed on the right side of the slash "/" indicates the number of total pages. In Batch Send, the number of total pages is not shown. • Receiving/Polling The number of pages that the machine successfully received is shown. **Note** • Depending on the transmission status on the recipient's machine or the setting of the machine, the value in [Pages] may differ from the actual number of pages printed.
Mode	The mode used for the communication is shown. There are three modes: G3, EC, and SG3 (Super G3). (Thisfield is blank if a mode other than above these was used.) When IP Fax (SIP) is used: IP Fax or IP Fax-ECM
Contents	The information about the communication is indicated. See the Note field at the bottom of the report for a list of abbreviations and their definitions. • Transmitting 1 Remote service 2 Redial 3 Folder XXX 4 Broadcast/Multi-Poll 5 Polling 6 Relay Broadcast Assignment 7 Fax forwarding box XXX When IP Fax (SIP) is used: 1 Redial 2 Folder XXX 3 Broadcast/Multi-Poll 4 Polling • Receiving 1 Folder XXX 2 Polling 3 Receiving line box XXX When IP Fax (SIP) is used: 1 Folder XXX 2 Polling 3 Receiving line box XXX **Note** • XXX indicates the Folder number
Status	The result of the operation is indicated. Completed : The operation ended normally. Busy : The recipient is busy or did not answer. Auto Send : The document is being re-sent and the set re-send times has not been exceeded. Canceled : The communication was terminated.

Item	Description
	Check Remote Station : An error caused by the recipient or the line during communication. Send Again : The document must be re-sent because the re-send times have reached the maximum due to a transmission error. Receive Again : A polling request must be re-sent due to a polling reception error.Or, you must ask a sender to resend the document due to a reception error. Disconnected : Check that the line is properly connected. When IP Fax (SIP) is used, check that the network cable is properly connected. XXX-XXX : Error code **Reference** • For more information on lines, refer to "2 Product Overview" > "Machine Components" > "Telephone line connectors" in the User Guide and for more information on XXX-XXX (error code), refer to Error Code(P.496). • For more information on how to connect network cables, refer to "Using the Ethernet Interface" (P.21)
Total	All pages received or sent are recorded.

EP System

Electronic Partnership (EP) is a system to automatically control or maintain the machine by connecting the machine and the EP center of Fuji Xerox.

You can use the EP system via the Internet.

The following describes how to use the EP system on the machine.

Note

- The services provided by the EP system are available only when the machine is switched on.
- The EP system may not be available in some regions. For more information, contact our Customer Support Center.

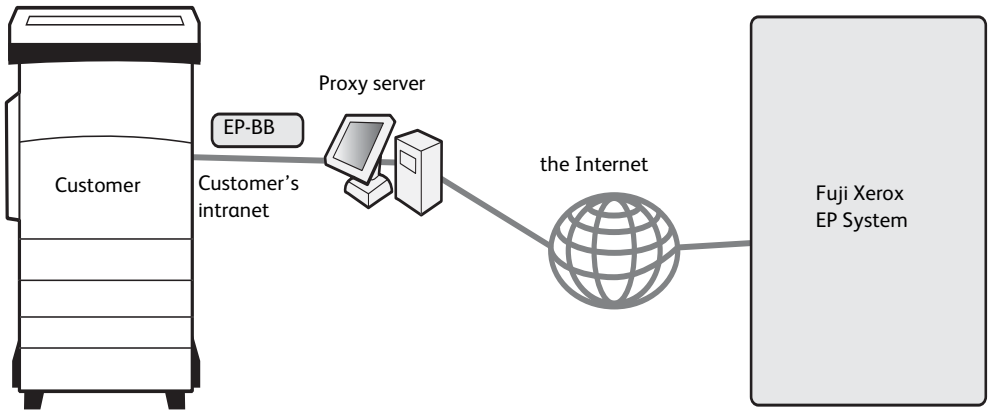

The following services are available for EP system:

Automated Meter Reading

The machine automatically reports the meter readings at a scheduled date and time every month. You can check the previous meter readings by selecting [Billing Information].

Note

- [Billing Information] can be displayed when the EP system is used. For more information, refer to "Billing Information" (P.134).

Check or Maintenance Request of the Machine

When a check or maintenance is required, the machine sends a check or maintenance request to our Customer Support Center. A service representative visits you as required. This operation should be performed by a system administrator.

Automated Alert Notification

When a problem occurs, the machine performs a self-diagnosis and automaticallynotifies the problem to our Customer Support Center.

A service representative visits you in response to the notification.

Timely Delivery of Consumables

The machine notifies us of the used amount of consumables such as toner cartridges. We send you consumables based on usage track records.

Remote Modification of the Settings

We can remotely change the machine settings as you request. For more information on each setting, contact our Customer Support Center.

Software Upgrade

When the software requires an upgrade, you can download a newer version of thesoftware and upgrade it.

Reference

- For information on software upgrade, refer to "Software Upgrade" (P.168).

Index

Numerics

10 Mbps Full-Duplex 201
10 Mbps Half-Duplex 201
100 Mbps Full-Duplex 201
100 Mbps Half-Duplex 201
1000 Mbps 201
10-inch Continuous Form Mode 676
15-inch Continuous Form Mode (When Aligned at Left in Landscape Orientation) 676
1st Tab - Features Allocation 236, 245
2 Pages Up On Receipt 252
2 Sided Copying 186
2 Sided Printing 252, 287
2 Sided Report 166
200 dpi (High Speed) 269

A

A/B Series Size 159, 192, 240, 241, 257
Accept Cookies 274
Access Control 315, 426
Access To 325
According to Original Orientation 243
According to Print Auditron 322
Account Administration 428
Account Administrator 304, 425
Account Auto Setup for Card Login 319
Account Limit for All User 426
Account Limit for Each User 426
Accounting 141, 145, 301
Accounting Login Screen Settings 308
Accounting Type 307
Accounting using Authentication Server 428
Accounting/Billing Device 311
Accounting/Billing Device Settings 310
Active Jobs View 324
Activity Report 165, 721, 746
Activity Report - Recipient 166
Add Address Book Entry 289
Add Domain Name 240
Add Domain Name to User Name 226
Add Fax Comment 300
Add Me to "Cc" Field 264
Add Me to "To" Field 264
Add This User to Authorization Group 304
Added Port Number 196
Adding paper 66
Address Book 120, 121, 284, 286
Address Book Default - Fax 266
Address Book Default - Scan 266
Address Book Settings 140, 144, 266
Address Book Type 266
Address Type 292
Address Type Settings When Registering on the Address Book 721
Addresses Registered on Job Flows 735
Addresses to Bypass Proxy Server 206
Adjust Color Registration 164
Adjust Image Transfer 169, 654
Adjust Paper Registration 169
Adjust Punch Position/Booklet Fold Position 169
Adjusting Screen Brightness 41
Adjusting the Transfer Output Value 654
Administrator Guide 17
Adobe Communication Protocol 195
Alert Tone 151
All Account Limits 306
All Authorization Groups 306
All Feature Access Settings 306
All levels below root entry 218
All User Accounts 306
Allocate Memory 227
Allow Casual Users to Edit From Field 264
Allow Guest Users to Edit From Field 264
Allow Print Driver to Override 232
Allow to edit From if Search Failed 264
Allow to edit From if Search Found 264
Allow User to Disable Active Settings 318, 324, 425
Allow User to Disable Active Settings (for Forcible Printing Features) 735
Alphanumeric fonts 681, 688
Alternative Name for Account ID 309
Alternative Name for User ID 308, 318
Annotations - Comment - Font Color 188
Annotations - Comment - Font Size 188
Annotations - Comment Density 191
Annotations - Create Comments 193
Annotations - Stored Comment 188

Applicable Lines 640
Apply Layout Template to Copy/Print Jobs 173
Area Determination Mode 700
ART IV, ESC/P, 201H Form Memory 227
as the address type 291, 292
Assigning Services to the Custom Buttons 39
Assigning to the One-Touch Buttons 708
Attachment, Basic Headers & Message 260, 262
Attachment, Full Headers & Message 260, 262
Attribute Name of Custom Items 1, 2, and 3 219
Attribute of Login User Name 217
Attribute of Smart Card 217
Attribute of Typed User Name 217
Attribute Type of Certificate 219
Attribute Type of Custom Items 1, 2, and 3 219
Attribute Type of E-mail (Internet Fax) 219
Attribute Type of E-mail Address 219
Attribute Type of Fax Number 219
Attribute Type of Given Name 218
Attribute Type of IP Fax (SIP) Number 219
Attribute Type of Name 218
Attribute Type of Surname 218
Audio Tones 150
Auditron Mode 308
Auditron Report (Copy Jobs) 124
Auditron Report (Fax Jobs) 125
Auditron Report (Print Jobs) 125
Auditron Report (Scan Jobs) 125
Auditron Reports 123
Authenticating Login Users 448
Authentication 315
Authentication and Accounting Features 423
Authentication and Accounting Relationship 429
Authentication for Job Flow Sheets and Folders 435
Authentication Method 216
Authentication Methods 427
Authentication of User Attributes 216
Authentication System 214
Authentication/Security Settings 141, 145, 313
Authorization Groups 425
Auto 201
Auto Clear 148
Auto Clear Alert Tone 151
Auto Display of Login Screen 152
Auto Eject Time 195
Auto Job Promotion 177
Auto Job Release 148
Auto Layout 698, 699
Auto Paper Off 190
Auto Paper Select 158
Auto Print 148
Auto Reduce On Receipt 251
Auto Retrieval of CRL 225
Auto Select 287
Auto Start 279
Auto Tray Switching 160
Auto Tray Switching Control 160
Auto Upright Orientation 243
Auto Validation of Speed Dial Entry 181
Automated Alert Notification 749
Automated Meter Reading 749
Automatic Switching 681, 688
Automatic Tray Selection 66
Automatically Configured IPv6 Address 204
Automatically Printed Reports/Lists 125
Available Extended Function and Passcode 740

B

Back Cover Tray - Button 1 - 3 183
Background Pattern 171
Background Suppression 185, 237
Background Suppression (Black Copy) 163
Background Suppression (Color Copy) 163
Background Suppression (Photo & Text) 191
Background Suppression (Scan Jobs) 163
Background Suppression Level 242
Background Suppression Level (Text) 191
Banner Sheet 232
Banner Sheet Offset 232
Banner Sheet Tray 232
Base Tone 151
Basic Settings 660, 690
Batch Send 250
Bates Stamp - Top Left, - Top Center, - Top Right, - Bottom Left, - Bottom Center, and - Bottom Right 192
BB Registration 167
Before Using the Machine 15
Billing - Day Time, Billing - Night Time, Billing - Midnight 298
Billing Data List 122
Billing for Fax Jobs 431

Billing Information 112, 134
Binary 195
Black Impressions 134
Black Large Impressions 135
Block Inbound Faxes 254
Block Unknown Fax Numbers 254
Bonjour 196
Booklet Creation - Default Cover Tray 189
Booklet Finishing 644
Booklet Offset 176
BOOTP 202
Border Limit 251
Broadcast Checkbox on 1st Tab 249
Broadcast Disabled 248
Broadcast Report 126
Broadcast Starting Rate 260
Broadcast/Multi-Poll Report 165
Bypass 287

C

Calibration 164
Cancel 305
Cancel Printing 233
Capacity 642
Center Erase/Binding Edge Erase 187, 238
CentreWare Internet Services 734
CentreWare Internet Services Help 17
CentreWare Internet Services Problems 488
CentreWare Internet Services Setting Items .. 339, 343, 347, ... 358, 372
CentreWare Internet Services Settings 327
Certificate Auto Store 222
Certificate Conditions 407
Certificate conditions that can be set according to the types of encryption 407
Certificate Revocation Retrieval Settings 225
Chain Dial 249
Change Account Limit 303
Change Settings 158
Changing Passcode 449
Changing Passcode by User 449
Changing the Default Authorization Group Settings 442
Changing the Interval for Entering Power Saver Mode .. 23
Changing the Paper Settings 72
Changing the Paper Size 70
Changing the Paper Size for Trays 1 to 4 70
Changing the Screen Default 29
Character Code 707
Charge/Private Print Settings 321
Check Document Guides Position 180
Check EP Connection 167
Check Folder Passcode 277
Check or Maintenance Request of the Machine 749
Check Smart Card Details 168
Checking the status of consumables 79
Cleaning the Document Cover and Document Glass . 99
Cleaning the Document Feeder Rollers 101
Cleaning the Exterior 96
Cleaning the Interior (LED Printheads) 97
Cleaning the Machine 96
Cleaning the Touch Screen 99
Cleaning the White Chute and Constant Velocity Transport Glass 100
Clear Cache Upon Closing 274
Coding Method 640, 642
Color Capability 632
Color Effect for Dual Color Copy 711
Color Impressions 134
Color Large Impressions 135
Color Scanning 236
Color Shift 186
Color Space 237, 242
Common Service Settings 140, 143, 146
Company Logo 258
Compatible Mode 233
Completed Jobs View 324
Compression Format of Scanned Images 717
Configuration for Account Administration 446
Configuration for Authentication 439
Configuration for IC Card Reader (Optional) 444
Configuration of E-mail Encryption/Digital Signature 416
Configuration of Encryption using IPsec 413
Configuration of HTTP Communications Encryption 410
Configuration of Job Flow Sheets 376
Configuration of Network Scanning (Job Template Scanning) 373
Configuration of PDF/DocuWorks/XPS Signature 420

Configuration of Scan to My Folder 367
Configuration of Scan to PC 364
Configuration of Store & Send Link 377
Configuration of Store to Folder 362
Configuration of Store to USB 372
Configuration of Store to WSD 379
Configuration on Sender and Recipient 417, 420, 421, 422
Configuration on the Computer 736
Configuration on the Machine 328, 410, 413, 416, 420, 735
Configuration on the Server 354
Configuration Report 116, 117, 119, 121
Confirmation Options 247
Connection Interval 147
Connectivity & Network Setup 140, 143, 194
Continuous Copy Speed 633
Continuous Print Speed 635
Contrast 185, 237
Control Panel Alert Tone 151
Control Panel Select Tone 151
Conventions 19
Convert Custom Size to Standard Size 267
Copy 288
Copy and Simple Copy 711
Copy Control 189
Copy Defaults 183
Copy Feature 711
Copy Function 632
103
Copy Output 188
Copy Reports 116
Copy Service Settings 140, 143, 182
Copy Tab - Features Allocation 182
Cover Page 295
Covers - Default Front Cover Tray, Default Back Cover Tray 189
Create Authorization Groups 317
Create Fax Group Recipients 299
Create Folder 276
Create Job Flow Sheet 279
Creating Job Flow Sheet on the 436
Create Job Flow Sheet Keyword 288
Create New Job Flow Sheet 281
Create Text String 173
Create/Change Link 279
Create/View User Accounts 301, 317
Creating / Using Job Flow Sheet 435
Creating an Authorization Group 443
CRL Retrieval Time-Out 225
Current System Software 113
Custom Buttons 1 to 3 153
Custom Colors 193
Custom Item 1 293
Custom Item 2 293
Custom Item 3 293
Custom Paper Name/Color 157
Custom Settings 128
Custom Size 160, 192, 240
Custom Watermark 1 to 3 172
Customize Paper Supply Screen 158
Customize User Prompts 308
Customizing the Button Layout 33
Customizing the Control Panel 29
Cut Link 278

D

Data Indicator 181
Data Processing Order 234
Date 146
Date - Font Size 189
Date & Time
Newest First 273
Oldest First 273
Date Format 170
Daylight Savings 149
Deactivate All 150
Default Language 153
Default Print Paper Size 177
Default Programming 129
Default Watermark 170
Default Watermark Effect 170
Delay Start 296
Delay Start - Specific Time 247
Delete 282
Delete All Certificates/Initialize Settings 169
Delete All Data 167
Delete Expired Files 278
Delete Files After Retrieval 278
Delete Form 229
Delete from this group 300

Delete Job 190, 231, 241, 253
Delete Layout Template 173
Delete Persistent Cookie Upon Closing 274
Delete Remote Accounts 320
Delete this Group 300
Deleting a Private Charge Print Job with an Invalid User ID 108
Delivery Confirmation Method 260
Delivery Receipts 260
Delivery Receipts/Read Receipts 247
Density 171
Destination Computer 367
Device Access 303, 315, 426
Device Certificate 223
Device Certificate - Client 221
Device Certificate - S/MIME 221
Device Certificate - Server 220
Device certificates corresponding to the types of encryption 406
DHCP 202, 209
DHCP v6 209
DHCP/AutoIP 203
Digital Signature 285
Digital Signature - Outgoing E-mail 222
Digital Signature - Outgoing Internet Fax 222
Digital Signature of PDF 717
Dimensions 635, 645
Dimensions/Weight 643, 644
Direct (P2P) 259
Direct Authentication 216
Direct Fax 254, 721
Direct Fax Driver 714
Direct Fax for Mac OS 733
Direct Fax Function (optional) 640
Direct Print via USB Host (a USB memory device) 712
Directory Service 266
Disabled 150, 158
Display Billing Information Upon Login 309
Display Confirmation Screen 230
Display Consumables Screen 155
Display Default of Stored Print Job List 272
Display Details of Stored Print Job List 272
Display Fax Line Selection 246
Display Message 230
Display Message at End of Scanning 242
Display Message at End of Transfer 242
Display Paper Supply Screen 230
Display Scan & Transfer Screens 242
Document Feeder Quiet Mode 180
Document Jams 623
Document Size 640, 641
DocuWorks Direct Print 679
DocuWorks Direct Print Settings 679
DocuWorks Printer Settings List 119
DocuWorks Signature 223
DocuWorks Signature Hash Algorithm 223
Domain Filter List 120, 121
Domain Filtering 226
Domain Name 206, 215, 220
Domains 1 to 50 226
Double-Tap Interval 157
Drag 42
Dual Color - Non-target Area Color 184
Dual Color - Source Color 184
Dual Color - Target Area Color 184
Dual Stack 202
Duplex Automatic Document Feeder 642
Duplex Function 642
Duration for Preview Generation 272

E

Edge Erase 238
Edge Erase - 2 Sided Original - Side 2 187
Edge Erase - Bottom Edge 186
Edge Erase - Left & Right Edges 238
Edge Erase - Left &amp 252
Edge Erase - Left Edge 186
Edge Erase - Right Edge 187
Edge Erase - Top & Bottom Edges 238, 252
Edge Erase - Top Edge 186
Edit E-mail Recipients 265
Edit/Delete 281, 288
E-mail 350, 360
When selecting 291
E-mail Address 205, 292, 303
E-mail Addresses 1 to 5 175
E-mail Control 262
E-mail Encryption 239
E-Mail Environment 393
E-mail Environment Settings 349
E-mail Features Problems 489

E-mail Forwarding 724
E-mail Message 175
E-mail Notification 288, 351
E-mail Notification (Status notifications such as consumables) 350
E-mail Notification Service 198
E-mail Overview 350
Email Screen Default 236
E-mail Send Authentication 214
E-mail Sending When Search Failed 264
E-mail Subject 238
E-mail/Internet Fax Service Settings 140, 144, 262
Embedded Plug-ins 175
Embossed 170
Emptying Punch Waste Container (for Finisher-B1) ... 93
Emulation 637, 659, 681, 688
Emulation Mode 659, 681, 688
Enable File Printing 275
Enable SIP Server 209
Enabled 150, 303
Enabling Authentication 439
Enabling Auto Layout 699
Encrypting HTTP Communications from the Machine to a Remote Server(SSL/TLS Client) 408
Encryption 285
Encryption and Digital Signature Overview 406
Encryption and Digital Signature Settings 405
Encryption and Digital-Signature Features for Scan Files 409
Encryption Features for Communication 408
Encryption Key for Confidential Data 179
Encryption using IPsec 409
End Sheet 232
Enter Once Only 248, 249
Enter Twice 248, 249
Entering Text 45
EP Diagnosis 170
EP Diagnostic Request/Repair Request 166
EP Proxy Server Setup 207
EP Registration 167
EP System 749
EPA Server Registration 167
Error Code 496
ESC/P Logical Printers List 118
ESC/P Settings List 118
ESC/P User Defined List 118
ESC/P-K Emulation 659
ESC/P-K Emulation Print Features 660
ESC/P-K Emulation Settings 660
Ethernet - Rated Speed / Ethernet 1 - Rated Speed, Ethernet 2 - Rated Speed 201
Ethernet Settings 201
Ethernet1 - Network Name, Ethernet 2 - Network Name 201
Executing Calibration 103
Expiration Date for Files in Folder 271
Extended Printable Area 646
Extended Settings 662, 691
Extension 248
Extra Center Tray 176

F

F Code 297
Factory Default Settings 689
Factory Defaults 128
Failed Access Log 318
Fault Tone 151
Faults 112, 132
Fax 430
When selecting 291
Fax Billing Data 310
Fax Comments List 122
Fax Control 248
Fax Data in Folder Priority 1 to 3 254
Fax Defaults 246
Fax Function (optional) 639
Fax Gateway Feature 725
Fax Group Recipients 121
Fax Immediate Reception 720
Fax Line 1 - Name to Fax Line 3 - Name 246
Fax Number 295
Fax Received - Line 1 to 3 257
Fax Received - SIP 257
Fax Received Options 255
Fax Receiving Mode 130, 251
Fax Reports 120
Fax Screen Default 245
Fax Service 175
Fax Service Settings 140, 144, 245
Fax Speed Dial Default 266
Fax Transfer from Address Book 261

Fax Transfer Maximum Data Size 261
Fax Transfer Resolution 269
Feature Access 303, 317, 426
Feature Combinations when Transmitting an Internet Fax 722
Feature in 2nd to 4th Column 245
Feature Specifications 729
Features Supported by F Code Communication 720
File Display Default 267
File Format 236, 285, 286, 641
File Name
Ascending 273
Descending 273
File Transfer Report - Fax Server 126
Filename Format 242
Filename Format for Store to Folder 253
Files deleted at 271
Files kept for 271
Files Retrieved By Client 267
Fine-tune 100 % 190
Finisher Adjustment 168
Finisher-A1 (Optional) 643
Finisher-B1 (Optional) 643
First Copy Output Time 633
First Tab - Reconfirm Recipients 154
Fit to Cut Sheet 671, 675
Fit to Cut Sheet (When 2 Up is specified) 673
Flick 43
Flick and Double-tap 156
Folder List 122
Folder Name 277
Folder Passcode 277, 726
Folder Report 126, 165
Folder Selector - Service Priority 253
Folder Selector by G3 ID 252
Folder Selector by Telephone Number / G3 ID 253, 255
Folder Selector List 121
Folder Selector Setup 253, 256
Folder Service Settings 141, 144, 267
Font Caching 682, 689
Font Color 171
Font List 119
Font Size 170
Fonts 637
For Active Directory 294
For Windows NT 294
For workgroups 294
Force Annotation 172
Force Delete 267
Force Watermark - Client Print 171
Force Watermark - Copy 171
Force Watermark - Media Print 172
Force Watermark - Print Stored File 172
Forcible Output in Emulation Mode 683, 689
Form Overlay 660
Forms 660
From Last Operation to Low Power Mode 150
From Last Operation to Sleep Mode 150
Front Cover Tray - Button 1 - 3 183
FTP Client 197
FTP Transmission for Scan to PC 718
Functional Code 275

G

G3 Line 1 to 3 - Dial Type 258
G3 Line 1 to 3 - Fax ID 258
G3 Line 1 to 3 - Line Type 259
G3 Sender ID - Fax 250
G3 Sender ID - IP Fax (SIP) 250
G3 SIP Line - ID 259
Gateway Address 211
General Information 113
Generation of URL Link 244
Get IP Address from DHCP 203, 204
Gigabit Ethernet (GbE) Port 201
Given Name 292
Global IP Address Security Warning 157
Group Name 318
Group Send Disabled 249
Guest User 319
Guides for Optional Components 17

H

Halftone/Printable Colors 632
Handling consumables/periodic replacement parts 79
Hard Clip Area 695
HDD (optional) 632
Hide Job Details 325

High Compression Image Kit (Optional) 716
Highlighted Originals 191
Hole Punch 287
Hole Punch Tool 168
Host Interfaces and Emulation 659
Host Name 206
How to check the certificate settings on Windows 407
How to create the self-signed certificate (for SSL server) 411
How to Determine Document Size 701
How to Determine the Scaling Ratio 703
HP-GL/2 Auto Layout Memory 228
HP-GL/2 Emulation 688
HP-GL/2 Emulation Settings 690
HP-GL/2 Logical Printers List 118
HP-GL/2 Palette List 118
HP-GL/2 Settings List 118, 690
HTTP - SSL/TLS Communication 220
HTTP - SSL/TLS Port Number 220
HTTP Proxy Server Authentication 207, 208
HTTP Proxy Server Login Name 207, 208
HTTP Proxy Server Name 206, 208
HTTP Proxy Server Password 207, 208
HTTP Proxy Server Port Number 207, 208
HTTPS Proxy Server Authentication 207, 208
HTTPS Proxy Server Login Name 207, 208
HTTPS Proxy Server Name 207, 208
HTTPS Proxy Server Password 207, 208
HTTPS Proxy Server Port Number 207, 208

I

IC Card Reader (optional) 708
ID 211
ID Card Copy 711
ID Card Copy - Reduce/Enlarge 191
IEEE 802.1x Settings 225
IEEE 802.1X Settings / IEEE 802.1X Settings (Ethernet 1), IEEE 802.1X Settings (Ethernet 2) 224
If the Paper Size Setting is A Sizes 702
If the Paper Size Setting is Auto 702
If the Scaling Mode is a Paper Size 701
If the Scaling Mode is the ACA 701
If the Scaling Mode Setting is ACA 703
If the Scaling Mode Setting is Paper Size 703
Image Enhancement 163
Image Quality 160, 162
Image Quality Adjustment 162
Image Quality Trouble 458
Image Rotation 187
Image Rotation - Rotation Direction 187
Image Shift - Side 1 187
Image Shift - Side 2 187
Image Transfer Screen 242
Importing/exporting a certificate using CentreWare Internet Services 419
Inbound Fax Spam List 121
Inch Size 160, 192, 240, 241, 257
Incoming E-mail Print Options 262
Incoming Internet Fax Print Options 260
Index 292, 295
Initialize Hard Disk 167
Inkjet Originals 191
Installation of CentreWare Internet Services 328
Installation When Using Internet Printing Protocol (IPP) 345
Installation When Using TCP/IP (LPD/Port 9100) 341
Installation When Using USB Port 338
Installing and Moving the Machine 707
Interface 637, 641, 642
Interface Cables 21
Interface-dependent 659, 681, 688
Internal Fonts 648
When selecting 292
Internet Fax and Direct Internet Fax 722
Internet Fax Control 259
Internet Fax Encryption 248
Internet Fax Function (optional) 641
Internet Fax Output Destination 261
Internet Fax Overview 392
Internet Fax Path 259
Internet Fax Profile 248, 284, 298
Internet Fax Profiles 724
Internet Fax Service 350
Internet Fax Subject 248
Internet Fax to E-mail 268
Internet Fax to Internet Fax 267
Internet Services (HTTP) 199
Internet/Intranet Connection 733
Internet/Intranet Connection Problems 489
IP Address 113
IP Address or Host Name 205

IP Address Settings 729
When selecting 291
IP Fax (SIP) Feature 727
IP Fax (SIP) Function (optional) 641
IP Mode 202
IPP 196, 337
IPsec 223
IPsec Settings 223
IPv4 - DNS Server Setup 203
IPv4 - Gateway Address 203
IPv4 - IP Address 203
IPv4 - IP Address Resolution 202
IPv4 - IP Filter 204
IPv4 - Subnet Mask 203
IPv4 and IPv6 Connection Problems 491
IPv4 Mode 202
IPv6 - DNS Server Setup 204
IPv6 - IP Filter 205
IPv6 Address Manual Configuration 204
IPv6 Mode 202

J

Job Complete Tone 1, 2 151
Job Completion Notice 351
Job Counter Report 122, 726
Job Flow Error Report 126, 166
Job Flow Scanning 361
Job Flow Service Settings 141, 144, 269
Job Flow Settings for High Compression Format 734
Job Flow Sheet List Default 269
Job History Report 165
Job Login Failure 322
Job Login Success 322
Job Status Default 324
Job Status/Activity Report 115
Job Submission Order 234
Job Ticket Memory 228
Job Type on Job Status screen 153
Job without User ID 322, 323
Jobs Manageable by Account Administration 429

K

Kerberos Server Certificate Verification 320
Kerberos Server Settings 215
Keyboard Input Restriction 155
Keyword 282
KS Settings List 118
KS5895 Settings List 119
KSSM Settings List 118

L

Language of the Original 239
LDAP - SSL/TLS Communication 221
LDAP Referral Hop Limit 218
LDAP Referrals 218
LDAP Server 218
LDAP Server/Directory Service Settings 216
Level of Certificate Verification 225
Lighten/Darken 185, 237, 246
Limited Paper 59
Line 1 to 3 - Company Logo 258
Line Monitor Volume 152
Link Job Flow Sheet to Folder 278
List of Embedded Plug-ins 175
Loading Paper 66
Loading Paper in Tray 5 (Bypass) 68
Loading Paper in Trays 1 to 4 67
Local Accounting 307, 428
Local Name 258
Local Terminal Information 258
Log In/Log Out by Touching the IC Card Reader (Optional) 449
Log In/Log Out from the Control Panel 448
Logging Out of User Authentication 448
Login Credential to Access Destination 240
Login Credentials for E-mail Send 214
Login Credentials to Search Entries 217
Login Name 213, 217
Login to Local Accounts 315, 426, 439
Login to Remote Accounts 315, 427
Login Type 315
Login User 424
Logout Confirmation Screen 318
Low Toner Alert Tone 152
LPD 196, 336
LPD Print Queue 234

M

Mac OS X 10.6, Mac OS X 10.7 Lion, OS X 10.8 Mountain Lion, OS X 10.9 Mavericks, and OS X 10.10 Yosemite 487
Machine Clock/Timers 146
Machine Configuration 113
Machine Information 112, 113
Machine Name 206
Machine Password 258
Machine Ready Tone 151
Machine Serial Number 113
Machine Status 111
Machine Trouble 453
Machine's E-mail Address/Host Name 205
Magnification Table 667
Maintenance 77, 166
Manual (HTML) 17
Manual Redial List - Dial Mode 249
Manual Redial List - Saved Entries 249
Manual Send/Receive Default 251
Manually Configured IPv6 Address 204
Manually Configured IPv6 Address Prefix 204
Manually Configured IPv6 Gateway 204
Mask Account ID (***) 309
Mask User ID (***) 309, 318
Maximum Address Entries 262
Maximum Data Size per E-mail 264
Maximum Image Size 296
Maximum Login Attempts by System Administrator 320
Maximum Number of Search Results 219
Maximum Number of Sessions 196
Maximum Number of Sets 192
Maximum Split Count 264
Maximum Stored Pages 190, 241, 254
Maximum Total Data Size 264
Media Print - Photos Trouble 495
Media Print - Text Trouble 494
Media Print Service Settings 141, 270
Media Print Settings 145
Memory 632
Memory Full Procedure 190, 241, 253
Message 284, 288
Message Digest Algorithm 222
Message Encryption Method 222
Meter (Copy Jobs) 136
Meter (Print Jobs) 136, 306
Meter (Scan Jobs) 136
Meter Count for Dual Color and Single Color Copies711
Meter Count for Watermark 713
Meter Counts for 2 Sided Printing 713
Meter Report (Print Jobs) 124
Millimeters/Inches 179
Minimum Passcode Length 321
Minimum Passcode Length for Stored Jobs 273
Mixed Size Originals 186, 238, 247
Mixed Size Originals - 2 Sided Copy 190
Mixed Size Originals Scan Mode 254
Multi-poll Report 126

N

Name 282, 292
Name/E-mail Address 284, 285, 288
Name/Fax Number 282, 283
NAT/NAPT 728
Network Accounting 307, 428
Network Interface 205
Network Scanning (Job Template Scanning) 360
Network Security 725
Network User ID Attribute 217
Network-related Problems 486
New Recipient 282, 283, 284
No Access to Copy/Fax/Scan/Print Service 303
No Login Required 315
No Spooling 228
Non-PJL Command Job(s) 323
Normal 191
Notes and Restriction for Using Secondary Ethernet (Optional) 737
Notes and Restriction on Authentication and Accounting 735
Notes and Restrictions for Print E-mail 739
Notes and Restrictions for Using Bonjour 737
Notes and Restrictions for Using TCP/IP 736
Notes and Restrictions on Accessing ISP 728
Notes and Restrictions on the Use of the Copy Feature 711
Notes and Restrictions on the Use of the E-mail/Internet Fax Feature 722
Notes and Restrictions on the Use of the Fax Feature ...

720
Notes and Restrictions on the Use of the Print Feature. 711
Notes and Restrictions when Connecting to Internet or Intranet 733
Notes on E-mail Receptions 726
Notes on E-mail Transmissions 722
Notes on Job Status Default Setting 735
Notes on Security 725
Notes on the User ID setting 735
Notify Job Completion by E-mail 174, 351
Notify the Completion of Jobs by E-mail 351
NTP Time Synchronization 147
Number of Overwrites 325
Number of Sheets for Scanning (for Folder) 715

O

Object Class of Search Target 218
Obtaining Addresses from LDAP Server 718
OCR Font Glyphs (0 x 5C) 234
OCSP Communication Time-Out 226
Odd Page 2 Sided 177
Off-hook Dialing 743
Offset Stacking (Center Tray - Lower) 176
Offset Stacking (Center Tray) 175
Offset Stacking (Right Middle Tray) 176
One level below root entry only 218
One-Touch Buttons 708
On-hook Dialing 744
Operating with DHCP 730
Operating with fixed address 729
Operation of Up/Down Buttons 155
Operation Time-Out 200
Optimize PDF For Quick Web View 237
Optional Components 651
Options 271
Orientation for Stored Print Jobs 267
Original Orientation 187, 238
Original Size 632, 637
Original Size / Paper Weight 642
Original Size Defaults 192, 240, 257
Original Type 185, 236, 246
Original Type - Auto (Black & White) 185
Original Type - Auto (Non-Black & White) 185
Original Type - See-Through Paper 191
Other problems on IPv6 addresses 493
Other Settings 175
Out of Paper Warning Tone 151
Outgoing/Incoming E-mail Settings 212
Outline 170
Output 287
Output Color 184, 709
Output Color (Simple Copy) 184
Output Color Recognition 162
Output Destination 188, 287, 707
Output Destination (Simple Copy) 188
Output Destination for E-mail 226
Output Destination Setup 257
Output Feature 660, 682, 689
Output Size Defaults 240
Output Tray Capacity 634
Outputting a Pending Print Job 660, 682, 689
Overview of Authentication and Accounting Feature 424
Overview of Machine Status 112
Overwrite Hard Disk 127, 325
Owner 269

P

Page Description Language 635
Page Numbers - Font Size 189
Page Numbers - Style 189
Pages per Side 187, 660
Pages per Side for Black & White and Color Mixed Documents and Meter Count 711
Paper and Other Media 47
Paper Capacity 643, 645
Paper Jams 612
Paper Jams in Bottom Left Cover B 617
Paper Jams in Bottom Left Cover C 617
Paper Jams in Duplex Module 619
Paper Jams in Finisher-A1 620
Paper Jams in Finisher-B1 621
Paper Jams in the Center Unit 622
Paper Jams in Top Left Cover A 615
Paper Jams in Top Left Cover C 618
Paper Jams in Tray 5 613
Paper Jams in Trays 1 to 4 613
Paper Jams under the Finisher Top Cover 620, 621
Paper Margin 700

Paper Orientation when Printing Mixed Size Originals ... 713
Paper Size ... 158, 632, 642
Paper Size and Number of Printable Characters ... 674
Paper Size and Printable Area ... 697
Paper Size Settings ... 177
Paper Size/Paper Weight ... 643, 645
Paper Supply ... 164, 184, 287
Paper Supply - Button 2 - 5 ... 183
Paper Tray Attributes ... 158
Paper Tray Attributes During Loading ... 159
Paper Tray Attributes on Setup Screen ... 159
Paper Tray Priority ... 159
Paper Tray Settings ... 157
Paper Tray Status ... 114
Paper Type ... 158
Paper Type Mismatch ... 230
Paper Type Priority ... 159
Paper Types ... 48
Paper Weight ... 633, 642
Passcode Entry for Control Panel Login ... 321
Passcode Entry for Smart Card Login ... 321
Passcode Policy ... 321
Passcode Setting for Extended Functions ... 740
Password ... 213, 217
Paused Job Handling ... 181
PBX ... 259
PCL Emulation ... 681
PCL Emulation Settings ... 683
PCL Font List ... 119
PCL Macro List ... 117
PCL Settings List ... 117, 683
PDF Direct Print ... 677, 713
PDF Direct Print Settings ... 677
PDF Settings List ... 117
PDF Signature ... 223
PDF Signature Hash Algorithm ... 223
PDF/DocuWorks/XPS Signature Settings ... 222
Photo & Text /Printed Original ... 191
Photo & Text Recognition ... 162
Photo Image Quality ... 163
Photo Reproduction Level ... 162
Photos - Paper Supply - Button 1 to 5 ... 270
Ping Connection Test ... 205
PJL ... 195
PKI Encryption and PKI Signature of PDF and DocuWorks Documents ... 716
PKI Encryption and PKI Signature of Scan Files ... 716
Placing a Call ... 743
Please adhere to the following points when loading paper in a tray ... 65
Please keep the following points in mind when storing paper ... 64
Plug-in Settings ... 175
Polled Files - Auto Delete ... 250
Polling Interval ... 213
Pool Server ... 269
Pool Server Login Method ... 269
POP Password Encryption ... 213
POP3 Server Settings ... 213
Port 9100 ... 197, 337
Port Number ... 196, 197, 198, 199, 200, 213, 294
Port Settings ... 194
Port Status ... 195, 196, 197, 198, 199, 200
PostScript Default Color ... 232
PostScript Driver ... 711
PostScript Font Absence ... 233
PostScript Font List ... 119
PostScript Font Substitution ... 233
PostScript Logical Printers List ... 118
PostScript Memory ... 227
PostScript Paper Supply ... 233
PostScript Wait Timeout ... 195
Power Off Deletes Jobs ... 272
Power on Self Test ... 168
Power Saver Deactivation ... 150
Power Saver Mode ... 23
Power Saver Settings ... 149
Power Saver Timers ... 150
Power Supply ... 634
Preferred DNS Server IP Address, Alternate DNS Server 1 IP Address, Alternate DNS Server 2 IP Address ... 203, 204
Preset % ... 241, 257, 667
Preset % (2-Up Printing) ... 669
Preset Buttons ... 183
Preventing Receipt of Unwanted E-mail ... 726
Prevention of Wrong Transmissions for Direct Fax ... 721
Preview ... 237, 247
Preview Generation ... 272
Preview of Scan File ... 717
Primary Network ... 202

Primary Server - IP Address 210
Primary Server - Login Password 210, 211
Primary Server - Login User Name 210, 211
Primary Server - Port Number 210, 211, 215, 216
Primary Server Name/Address 215, 216
Primary Server Type 210, 211
Print 230, 287, 429
Print & Delete Confirmation Screen 267
Print Area 229
Print Attachment Only 260
Print Delivery Confirmation Mail 263
Print Diagnostic Chart 169
Print Driver for Mac OS X 733
Print E-mail 350, 739
Print Error Notification E-mail 263
Print Function 635
..... 103
Print Job Confirmation Screen 272
Print Login Name on PDF Files 244
Print Mode 127, 195
Print only when communication error 165
Print Order for All Selected Files 273
Print Overview 336
Print Position 174
Print Position (Side 2) 174
Print Position Adjustment 174
Print Quantity 287
Print Reports 115
Print Reports Button 164
Print Resolution 635
Print Service Settings 140, 144, 227
Print the Auditron Report 306
Print the Meter Report 306
Print this Sample List 172
Print Universal Unique ID 174
Print User ID 231
Print when delivery fails 166
Print/Delete (Read) 278
Printable Area 646, 696
Printed Time in Force Annotation 708
Printer Environment Settings 335
Printer Lockout 148, 721
Printer Name 738
Printer Reports 117
Printing a Report/List 107
Printing from a USB Memory Device 712
Printing from Macintosh via USB Connection 711
Printing Resolution 632
Printing Scan Files 732
Printing via lpr Port 714
Prioritize IP Packets / Prioritize IP Packets (Ethernet 1),
Prioritize IP Packets (Ethernet 2) 212
Problem Solving 451
Process Control Setup 169
Profile 641
Profile for Broadcast Job 259
Programming 128
Protocol 205
Protocol Settings 200
Protocol to Receive E-mail 226
Proxy Server Settings 206
Proxy Server Setup 206, 208
Pseudo-Photo Gradation Mode 252
Public Folder Printed Files 257
Punch 644

Q

Quality/File Size 238
Quality/File Size for Retrieval 268
Quantity Display 192
Quick Reference Guide 17
Quick Setup Home 169

R

RARP 203
RAW 195
Read Receipts 260, 263
Receive Control 322
Receive E-mail 197
Receive Untrusted E-mail 221
Receive Untrusted Internet Fax 222
Receiving Buffer - IPP 228
Receiving Buffer - LPD 228
Receiving Buffer - Port 9100 228
Receiving Buffer - USB 228
Receiving Paper Size 251
Recipients 727
Reconfirm E-mail Recipient 154
Reconfirm E-mail Recipient Button 154
Reconfirm Fax/Internet Fax Button 155

Reconfirm Fax/Internet Fax Recipient....154
Reconfirm Recipient at Other Tabs....154
Recording Paper Size....639
Reduce / Enlarge - Button 3 - 5....246
Reduce 8.5 x 11"....252
Reduce/Enlarge....184
Reduce/Enlarge - Button 3 - 4....183
Reduce/Enlarge - Buttons 2 to 5....236
Reduce/Enlarge Presets....192, 241, 257
Re-enter Broadcast Recipients....248
Re-enter Fax Number or E-mail....249
Re-enter Group Recipients....249
Re-enter Recipients....248
Re-enter Speed Dial Recipients....248
Register Google Cloud Print....229
Relay Broadcast....297, 720
Remote Authentication System....367
Remote Authentication using the Smart Card....735
Remote Authentication/Directory Service....214
Remote Folder....296
Remote Modification of the Settings....750
Remotely Authenticated User....240
Replacing Consumables....78
Replacing Drum Cartridges R1, R2, R3, or R4....87
Replacing Stamp....94
Replacing Staple Cartridge (for Booklet Maker Unit for Finisher-B1)....92
Replacing Staple Cartridge (for Finisher-A1)....88
Replacing Staple Cartridge (for Finisher-B1)....90
Replacing Toner Cartridge....80
Replacing Waste Toner Container (R5)....82
Reports....119, 120, 164
Resend Attempts....284, 285, 286
Resend Interval....284, 285, 286, 287
Reset Total Impressions....305
Reset User Account....304
Reset User Accounts....305, 317
Resolution....238, 246, 295, 640
Resolution when group is specified....725
Response to Read Receipts....263
Restrict Recipient Selection Method....180, 318, 425
Restrict User to Edit Address Book....180, 318, 425
Restriction on Auto Layout....704
Restriction on Scanning Capacity....714
Restrictions on Internet Explorer....718
Restrictions on Macintosh (standard)....733
Restrictions on Macintosh (the Adobe PostScript 3 Kit (optional))....733
Restrictions on Method of Recipient Specification....707
Restrictions on Paper Selections upon Internet Fax Reception....725
Restrictions on the E-mail Server....725
Resume / Delete by User....181
Resume by User....231
Resume Job after Jam Clearance....231
Resume Job After Print Error....231
Retrieval of Certificate Status....225
Retrieve Programming....128
Retrieving Files from Folder....714
Retrieving Files in Folder from CentreWare Internet Services....732
Right Edges....252
Ringing Volume....152
Root entry only....218
Rotate 90 degrees....250
RTP Listening Port Number....212
Run Job....190, 241, 254

S

S/MIME Certificate....293
S/MIME Communication....221, 717
S/MIME Communication for Internet Fax....724
S/MIME Settings....221
S/MIME Untrusted E-mail Reception Settings....724
Same Resolution (High Quality)....269
Sample Job....188
Saturation....185, 241
Save (Write)....278
Save as Charge Print Job....324
Save as Private Charge Print Job....323
Save Deleted Faxes....250
Save in....269
Save remote accounts in this machine....320
Save Undelivered Faxes....250
Saved Faxes - Auto Delete....250
Scaling....699
Scaling Mode....701
Scan....430
Scan Chart with Document Feeder....170
Scan Defaults....236
Scan File Transfer Report....165

Scan File Transfer Report (Fax Server) 166
Scan Function (Optional) 637
Scan High Compression Feature 716
Scan Reports 119
Scan Resolution 637
Scan Service Overview 360
Scan Service Settings 140, 144, 235
Scan to E-mail 639
Scan to Fax 175
Scan to Fax Server 175
Scan to Folder 637
Scan to My Folder 361
Scan to PC 360, 638
Scan to PC Defaults 239
Scan to PC Screen Default 236
Scan/Fax Configuration 119, 121
Scanner Environment Settings 359
Scanning Resolution 632, 640, 641, 642
Scanning Speed 637
Schedule Upgrade 168
Scheduled Power Off 150
Scope of Search from Root Entry 218
screen 436
Screen After Auto Clear 152
Screen After Inserting USB 155
Screen Brightness 154
Screen Default 152
Screen Defaults 235, 245
Screen Switching After Inserting a USB Memory Device 715
Screen Type 164
Screen/Button Settings 152
Search by Keyword 281
Search by Name 281
Search Directory Root 218
Search Display Default 266
Search Entries by Common Name 218
Search Entries by Given Name 218
Search Entries by Surname 218
Search Time-Out 215, 219
Searchable - Page Orientation 243
Searchable - Text Compression 239
Searchable PDF 717
Searchable Text 239
Secondary Server - IP Address 210, 211
Secondary Server - Login Password 210, 211
Secondary Server - Login User Name 210, 211
Secondary Server - Port Number 210, 211, 215, 216
Secondary Server Name/Address 215, 216
Secondary Server Type 210, 211
Secure Polling from Other Faxes 714
Security Function Supplementary Guide 17
Security Settings 220
Select Keyword 281
Select Tray 5 230
Semi Standard Paper 50
Send as E-mail 284
Send as Fax 282
Send as Internet Fax 283
Send as IP Fax (SIP) 283
Send Document Size 639
Send E-mail 198
Send Query to OCSP Responder With 225
Sending Problems 471
Separators - Default Separator Tray 189
Serial Number 134
When selecting 291
Server Certificate Verification 215
Server Fax Overview 400
Server Name/IP Address 213, 220
Server Name/IP address 293
Server Response Time-Out 214
Service Access 303, 316, 426
Service Rep. Restricted Operation 179
Services Controlled by Authentication 432
Services Home 34, 153
Services Home - Additional Features 36, 153
Setting Item Details 699
Setting or Changing Passcode by System Administrator 449
Setting Restore Tool 109
Setting the Screen After Auto Clear 31
Setting the System Environment for E-mail Service. 725
Setting the Warmer Mode 26
Setting up a Certificate using CentreWare Internet Services 410
Settings by System Configuration 383
Settings from CentreWare Internet Services 730
Settings from the Control Panel 730
Settings on Manual Fax Transmissions 720
Setup 141, 145
Shadow Suppression 237

Shadow Suppression Level 242
Shared Name (SMB Only) 294
Sharpness 185, 237
Side Tray (optional) 645
Signing Certificate for E-mail Attachment 222
Simple Fax 721
Single Color 184
SIP 197
SIP Line - Company Logo 259
SIP Proxy Server Setup 210
SIP Registrar Server Setup 210
SIP Server 727
SIP Server IP Address Resolution 209
SIP Settings 209
SIP Transport Protocol 209
SIP User ID (Sign-in Name) 209
Size Detection 158
Skip Blank Pages 247, 254
Skip Blank Pages Feature 720
Smart Card Authentication 427
Smart Card Certificate Verification 320
Smart Card Link Mode 319
Smart Card Logout Timing 320
SMB Client 196
SMB Server Settings 219
SMB Server Setup 220
SMB Transfer for Scan to PC 719
SMTP AUTH Login Name 214
SMTP AUTH Password 214
SMTP Server Name/IP Address 213
SMTP Server Port Number 214
SMTP Server Settings 213
SMTP-SSL/TLS Communication 221
SNMP 197
SOAP 199
Software Download 180
Software Options 167
Software Upgrade 168, 750
Software Version 114
Speed Dial 282, 283
Split by Data Size 264
Split Encrypted E-mail 222
Split Encrypted Internet Fax 222
Split Files 718
Split into Pages 263
Split Send Method 263
Spool to Hard Disk 228
Spool to Memory 228
Spots/Streaks Diagnostics 169
SSL/TLS 221
SSL/TLS Settings 220
Stamp 247
Standard 195, 696
Standard Mode 233
Standard Paper 49
Standard Printable Area 646
Standard Size Threshold Value 267
Staple 287, 644
Staple Jams in Staple Cartridge (For Finisher-A1) 627
Staple Jams in Staple Cartridge (For Finisher-B1) 628
Stapler Faults 626
Start Job at Other Tabs 154
Start Sheet 232
Start Sheet & End Sheet 232
Start Upgrade 168
Starting CentreWare Internet Services 330
Starting Rate 247, 295
STARTTLS 221
STARTTLS (If Available) 221
STATIC 203, 209
Step 1 Enabling Port and Setting up TCP/IP 384, 394
Step 2 Configuration on the Machine 338, 341, 345
Step 2 Configuring E-mail Environment 395
Step 2 Setting the Server Fax Feature 403
Step 3 Configuration on the Computer 366
Store & Send Link 350, 361
Store & Send Link - E-mail Subject 239
Store & Send Link - Maximum File Size 244
Store to Folder 360
Store to USB 361, 715
Store to WSD 361, 719
Store/Delete Programming 129
Stored File Settings 141, 145, 271
Stored Job Expiration Date 271
Stored Programming 279, 708
Stored Programming Complete Tone 152
Stored Programming Tone 152
Storing and Handling Paper 64
Subject 285
Substitute Font and Print 233
Substitute Tray 229
Supplies 112, 133

Supported Environment for Bonjour 737
Supported OS 733
Supported Paper Type 49
Surname 292
Switching between Printer Languages 659, 681, 688
Switching by Commands 659, 681, 688
Sys. Admin. Settings Security Warning 157
System Administrator 304, 424, 425
System Administrator Settings 313
System Administrator's Login ID 313
System Administrator's Meter (Copy Jobs) 307
System Administrator's Passcode 314
System Requirements for the Machine 401
System Settings 140, 143

T

T.38 Settings 212
T.38 Transport Protocol 212
Tap 43
Target 164, 269
Targeted Jobs 174
Targeted Paper Color (Copy Jobs) 160
Targeted Paper Type (Copy Jobs) 160
TBCP 195
TCP Listening Port Number 212
TCP/IP - Common Settings 201
Text - Paper Supply - Button 2 to 5 270
Text and Photos for Media Print 712
Text String Added to User Name 217
The Copy Result is Not What was Expected 465
The Image is not What was Expected 484
The Print Result is Not What was Expected 469
ThinPrint 200, 713
ThinPrint-SSL/TLS Communication 221
Thumbnail - Outgoing E-mail 237
Thumbnail - Scan to PC 237
Thumbnail for Media Print 712
Thumbnail View 718
TIFF Format 242
TIFF/JPEG Logical Printers List 118
TIFF/JPEG Settings List 118
TIFF-F 260, 298
TIFF-J 260, 299
TIFF-S 260, 298
Time 147
Time Server Address 148
Time Zone 149
Timely Delivery of Consumables 749
Tone 258
Tools 137
Tools Menu List 143
Total Impressions 135, 306
Touch Screen 42
Transfer Protocol 239, 293
Transfer via FTP (1), Transfer via FTP (2) 285
Transfer via SMB (1), Transfer via SMB (2) 286
Transferring via FTP 294
Transferring via SMB 294
Transmission conditions for broadcast transmission 724
Transmission Header Text 247, 284
Transmission Header Text - Fax Transfer 261
Transmission Header Text - Polling 249
Transmission Interval 250
Transmission Mode 640
Transmission Report 125
Transmission Report - Job Deleted 165
Transmission Report - Job Undelivered 125, 165
Transmission Screen 246
Transmission Speed 640
Transmission Time 640
Tray 5 - Paper Size Defaults 159
Tray Mode 251
Trays 1 to 4 287
Trouble during Copying 464
Trouble during Faxing 471
Trouble during Printing 468
Trouble during Scanning 481
Troubleshooting 452
Turning Off the Machine 736
Type 637, 642, 643
Types of Account Administration 428
Types of Authenticartion 426
Types of Authentication 426
Types of Certificate 406
Types of paper loaded in trays 66
Types of User 424

U

UDPTL Listening Port Number 212

Unable to connect using an IPv4 address 491
Unable to connect using an IPv6 address 491
Unable to Copy 464
Unable to Import Scanned Documents to the Computer 482
Unable to Print 468
Unable to print using an IPv6 address 492
Unable to scan using an IPv6 address 492
Unable to Send a Scanned Document over the Network (FTP/SMB) 482
Unable to Send E-mail 484
Unavailable Fax Functions 720
Uncollated - Default Separator Tray 188
Unregistered Forms 231
Unregistered User 424
Unusable Paper 64
UPnP Discovery 198
URL File Expiration 243
URL of OCSP Responder 225
Usable Paper 52
Usage (Auto Paper Select) 158
USB 195, 336
Use Added Text String 217
Use Cache 274
Use Closest Size 230
Use Larger Size 230
Use of Smart Card 319
Use Proxy Server 206
Use TLS1.0 274
User 304
User Account Billing Information 135
User Authentication 448
User Authentication Operations 448
User Details Setup 318
User ID 302
User ID Authentication 427
User ID for Login 319
User Mode 251
User Name 294, 302
User Name for FTP Scan 240
User Name Only 240
User Role 304
User Roles 425
User Roles and Authorization Groups 424
Using FTP 364, 366
Using IP Fax (SIP) 381
Using Network Scan Driver and Stored File Manager 3 Simultaneously 714
Using the Ethernet Interface 21
Using the Internet Fax Service 391
Using the Machine as a Local Printer 336
Using the Machine as a Network Printer 336
Using the Server Fax Service 18, 399
Using the Telephone 743
Using the USB Interface 21
Using TIFF Files 714

V

Variable % 241, 257
Verify Remote Server Certificate 221
Verify User Details 308
Via E-mail Server 259
View Accounts 305
VoIP Gateway List 121
VoIP Gateway Setup 211

W

Warmer Mode 149
Warm-up Time 632
Watermark 170
Watermark/Background Contrast 171
Web Applications Version 274
Web Browser Setup 141, 145, 274
WebDAV 200
Website 113
What is Auto Layout? 698
When connection to a desired Web server fails 491
When connection to the Internet/Intranet fails 489
When Paper Jam Occurs 231
When print result is not what was expected 487
When receiving E-mail via SMTP 205
When receiving E-mails via POP3 206
When Smart Card Reader is Connected 319
When specifying an Internet fax profile 724
When SSL Certificate Verification Fails 275
When the extra Hard Disk is installed on the printer 689, 704
When the extra Hard Disk is not installed on the printer 704
When the Print Results Differ from the Settings 712

When to Notify 288
When using SMB 486
When using TCP/IP 486
When you cannot communicate with other SMB machines 486
When you cannot print 486, 487
While Printing 736
Windows Vista, Windows 7, Windows 8, Windows 8.1, Windows Server 2003, Windows Server 2008, Windows Server 2008 R2, Windows Server 2012, or Windows Server 2012 R2 486
Wireless LAN Settings 200
WSD 198
WSD Print - Port Status 198
WSD Scan - Port Status 198

X

Xerox Standard Accounting 307, 428
XPS Print Ticket Processing 233
XPS Signature 223

DocuCentre-V C2265/C2263
Administrator Guide

ME7494E2-1 (Edition 1)
June 2015
Fuji Xerox Co., Ltd.
Copyright © 2015 by Fuji Xerox Co., Ltd.