DocuPrint P365 d
DocuPrint P368 d

User Guide

Apple, Bonjour, Macintosh, and Mac OS are trademarks of Apple Inc. in the United States and/or other countries.

Adobe, Acrobat, Photoshop, PostScript, and PostScript 3 are either registered trademarks or trademarks of Adobe Systems Incorporated in the United States and/or other countries.

Microsoft, Windows Vista, Windows, and Windows Server are trademarks of Microsoft Corporation in the United States and/or other countries.

RSA and BSAFE are either registered trademarks or trademarks of EMC Corporation in the United States and/or other countries.

All product/brand names are trademarks or registered trademarks of the respective holders.

Microsoft product screen shot(s) reprinted with permission from Microsoft Corporation.

In this manual, safety instructions are preceded by the symbol ⚠. Always read and follow the instructions before performing the required procedures.

It may be a legal offence to print currency notes, certificates of stocks and securities, or any other documents of similar nature, regardless of whether they will be used.

Fuji Xerox is not responsible for any breakdown of machines due to infection of computer virus or computer hacking.

IMPORTANT:

1. This manual is copyrighted with all rights reserved. Under the copyright laws, this manual may not be copied or modified in whole or part, without the written consent of the publisher.
2. Parts of this manual are subject to change without prior notice.
3. We welcome any comments on ambiguities, errors, omissions, or missing pages.
4. Never attempt any procedure on the machine that is not specifically described in this manual. Unauthorized operation can cause faults or accidents. Fuji Xerox is not liable for any problems resulting from unauthorized operation of the equipment.
5. An export of this product is strictly controlled in accordance with Laws concerning Foreign Exchange and Foreign Trade of Japan and/or the export control regulations of the United States.

Xerox, Xerox and Design, Fuji Xerox and Design, as well as CentreWare are registered trademarks or trademarks of Xerox Corporation in Japan and/or other countries.

DocuPrint is a registered trademark of Fuji Xerox Co., Ltd.

Preface

Thank you for purchasing the DocuPrint P365 d/DocuPrint P368 d.

This guide is intended for users who use the printer for the first time, and provides all the necessary operating information about the print function.

Please read this guide to achieve the best performance from this printer.

This guide assumes you are familiar with computers and the basics of network operation and configuration.

After reading this guide, keep it safe and handy for future reference.

Fuji Xerox Co., Ltd.

Contents

Preface 3
Types of Manuals 9
Using This Guide 10
Organization 11
Conventions 12
About License 13
Product Features 14

1 Specifications 15

2 Basic Operation 19
Main Components 20
Front View 20
Rear View 21
Operator Panel 22
Securing the Printer 23
Installing Optional Accessories 24
Installing the Optional 512MB Memory 24
Installing the Optional 550 Sheet Feeder 27
Installing the Optional Wireless Printer Adapter 31
Installing the Optional Font ROM 33
Turning on the Printer 36
Printing a Panel Settings Page 37
Power Saver Mode 38
Exiting the Power Saver Mode 38

3 Printer Management Software 39
Print Drivers 40
CentreWare Internet Services 41
Creating an Administrative Password 41
Document Monitor (Windows® Only) 42
SimpleMonitor (Windows® Only) 43
Setup Disk Creation Tool (Windows® Only) 44

4 Printer Connection and Software Installation 45
Connecting Your Printer 46
Connecting Printer to Computer or Network 46
Setting the IP Address 48
TCP/IP and IP Addresses 48
Dynamic Methods of Setting the Printer's IP Address 48
Assigning an IP Address (for IPv4 Mode) 49

Verifying the IP Settings 50
Printing and Checking the Printer Settings Page 51
Installing Print Driver on Computers Running Windows® 52
Identifying Print Driver Pre-install Status (For Network Connection Setup) 52
Inserting the CD-ROM 53
USB Connection Setup 53
Network Connection Setup 55
Setting Up for Shared Printing 57
Point and Print 59
Peer-to-Peer 60
Installing Print Driver on Computers Running Mac OS X 63
Installing Print Driver on Computers Running Linux (CUPS) 64
Configuring Wireless Settings (Windows® & Mac OS X) 65

5 Printing Basics 71
About Print Media 72
Print Media Usage Guidelines 72
Print Media That Can Damage Your Printer 73
Print Media Storage Guidelines 73
Supported Print Media 74
Usable Print Media 74
Recommended Print Media 77
Loading Print Media 78
Capacity 78
Print Media Dimensions 78
Loading Print Media in the Standard 250 Sheet Tray and the Optional 550 Sheet Feeder 78
Loading Print Media in the Bypass Tray 80
Setting Paper Sizes and Types 88
Setting Paper Sizes 88
Setting Paper Types 88
Printing 89
Sending a Job to Print 89
Canceling a Print Job 89
Using the Stored Print Feature 90
Duplex Printing 92
Selecting Printing Options 93
Printing Custom Size Paper 97
Auditron 100
Checking Status of Print Data 100
Printing a Report Page 101
Printer Settings 102
Printing With Web Services on Devices (WSD) 103
Adding Roles of Print Services 103
Printer Setup 103

6 Using the Operator Panel Menus 105

Understanding the Printer Menus 106
Report / List 106
Meter Readings 107
Admin Menu 107
Tray Settings 130
Panel Lock Function 136
Enabling the Panel Lock 136
Disabling the Panel Lock 136
Setting the Power Saver Time Option 137
Resetting to Factory Defaults 138

7 Troubleshooting 139
Clearing Jams 140
Avoiding Jams 140
Identifying the Location of Paper Jams 141
Clearing Paper Jams From the Bypass Tray 142
Clearing Paper Jams From the Standard 250 Sheet Tray 144
Clearing Paper Jams From the Fusing Unit 146
Clearing Paper Jams From the Duplexer 149
Clearing Paper Jams From the Regi Roll 150
Clearing Paper Jams From the Optional 550 Sheet Feeder 152
Jam Problems 153
Basic Printer Problems 158
Display Problems 159
Printing Problems 160
Print Quality Problems 161
The Output Is Too Light 162
Toner Smears or Print Comes Off 163
Random Spots/Blurred Images 164
The Entire Output Is Blank 165
Streaks Appear on the Output 166
Vertical Blanks 167
Mottle 167
Ghosting 168
Light-Induced Fatigue 168
Fog 169
Bead-Carry-Out (BCO) 169
Jagged Characters 170
Banding 170
Auger Mark 171
Wrinkled/Stained Paper 172
Damage on the Leading Edge of Paper 173
The Top and Side Margins Are Incorrect 173
Protrudent/Bumpy Paper 174
Images Are Skewed 174
Noise 175
Problems With Installed Optional Accessories 176
Other Problems 177

Understanding Printer Messages 178
Contacting Service 180
Getting Help 181
LCD Panel Messages 181
SimpleMonitor Alerts 181
Obtaining the Product Information 181
Non-Genuine Mode 182

8 Maintenance 183
Cleaning the Printer 184
Cleaning Inside the Printer 184
Replacing Consumables 187
Replacing the Toner Cartridge 187
Replacing the Drum Cartridge 189
Replacing the Fusing Unit, Transfer Unit and Retard Roll 192
Ordering Supplies 198
Consumables 198
When to Order Supplies 198
Recycling Supplies 198
Storing Print Media 199
Storing Consumables 200
Managing the Printer 201
Checking or Managing the Printer with CentreWare Internet Services 201
Checking Printer Status with SimpleMonitor (Windows® Only) 201
Conserving Supplies 202
Checking Page Counts 203
Moving the Printer 204
Removing Options 205
Removing the Optional 512MB Memory 205
Removing the Optional 550 Sheet Feeder 207
Removing the Optional Wireless Printer Adapter 209
Removing the Optional Font ROM 211

Contacting Fuji Xerox 213
Technical Support 214
Online Services 215

Types of Manuals

Manuals included with the printer

The following manuals are provided with the DocuPrint P365 d/DocuPrint P368 d.

Safety Guide	Describes the information you need to know before using the printer and to operate the printer safely.
Setup Guide	Provides step-by-step instructions on how to set up your printer.
User Guide (this guide)	Describes how to get ready to print and set various features. It also covers the operator panel menus, troubleshooting tips, and maintenance information. This guide is on the *Software/Product Manual* disc.
PostScript User Guide	Describes how to set up your printer as a PostScript® printer and the features that can be configured on your print driver. This guide is on the *PostScript Driver Library CD*.

Manuals included with an optional accessory

The following manual is provided with the optional accessories (sold separately).

Installation Guide	Optional accessories that require an installation at the customer's site are provided with an Installation Guide.

Using This Guide

This section includes:

- "Organization" on page 11
- "Conventions" on page 12

■ Organization

This guide is organized into the following chapters. The summary of each chapter is as follows:

1 Specifications	Describes the printer specifications.
2 Basic Operation	Describes the main components of the printer, the Power Saver mode, and the preparation of the printer to use.
3 Printer Management Software	Describes the software available for the printer.
4 Printer Connection and Software Installation	Describes the basic information about how to connect the printer to your computer via the network or USB and how to install the print driver.
5 Printing Basics	Describes the supported paper, how to load paper, and how to print data using various print features.
6 Using the Operator Panel Menus	Describes the setting items available on the operator panel, and their setup procedures.
7 Troubleshooting	Describes the troubleshooting tips for printer problems such as paper jams.
8 Maintenance	Describes how to clean the printer, how to replace consumables, and how to see the printer status.
9 Contacting Fuji Xerox	Describes support information.

■ Conventions

1 In this guide, personal computers and workstations are collectively called “computers”.

2 The following terms are used throughout this guide:

IMPORTANT:

- Important information that must be read and followed.

NOTE:

- Additional information that merits emphasis.

See also:

- References within this guide.

3 Orientation of documents or paper is described in this guide as follows:

, , Long Edge Feed (LEF): Loading the document or paper in landscape orientation.

, , Short Edge Feed (SEF): Loading the document or paper in portrait orientation.

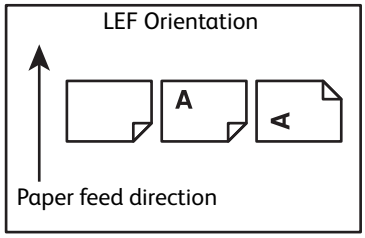

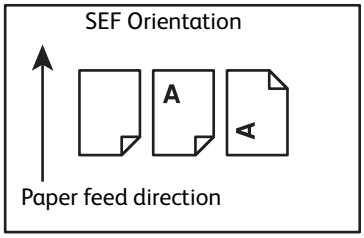

About License

RSA BSAFE

This product includes RSA BSAFE® Cryptographic software from EMC Corporation.

DES

This product includes software developed by Eric Young.

(eay@mincom.oz.au)

AES

Copyright© 2003, Dr BrianGladman, Worcester, UK. All rights reserved. This product uses published AES software provided by Dr Brian Gladmanunder BSD licensing terms.

TIFF(libtiff)

LibTIFFCopyright© 1988-1997 SamLeffler

Copyright© 1991-1997 Silicon Graphics, Inc.

ICC Profile (Little cms)

LittlecmsCopyright© 1998-2004 Marti Maria

JPEG

Our printer software uses some of the codes defined by the Independent JPEG Group.

Product Features

This section describes the product features and indicates their links.

Duplex Print

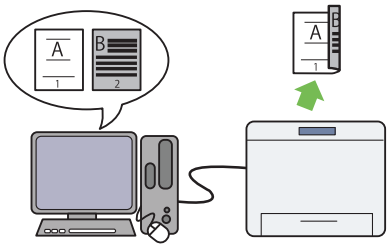

The 2-Sided Print feature is to print two or more pages on the front and back side of a single sheet of paper. This feature helps reduce the paper consumption.

For more information, see "Duplex Printing" on page 92.

Stored Print

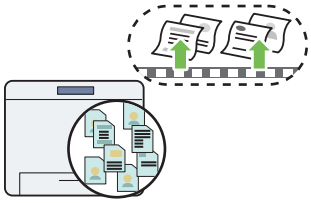

The Stored Print feature allows you to temporarily store your print data in the printer memory and output it later. You can effectively manage your time when you print confidential data or large-volume data at off-peak hours.

For more information, see "Using the Stored Print Feature" on page 90.

N-up Print

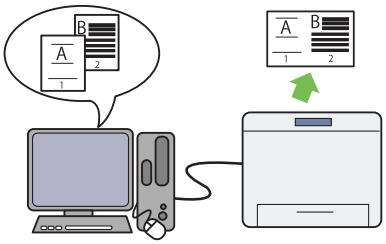

The Pages Per Sheet (N-Up) feature allows you to print multiple pages on a single sheet of paper. This feature helps reduce the paper consumption.

For more information, see the print driver's help.

1

Specifications

This chapter lists the main specifications of the printer. Note that the specifications of the product may change without prior notice.

Items	Description
Product Code	DocuPrint P365 d 220 V: TL300991 DocuPrint P368 d 220 V: TL300989 DocuPrint P365 d 220 V KOREA: TL300990 DocuPrint P365 d 110 V TAIWAN: TL300988
Type	Desktop
Printing Method	Laser Xerography **IMPORTANT:** • Laser + electrophotographic system
Fusing System	Thermal fusing system
Warm-up Time	19 seconds or less* * The values are based on a room temperature of 20 °C and on the factory default setting. **IMPORTANT:** • It may take longer due to the image quality adjustment.
Continuous Print Speed*1	1 Sided*2: 38 sheets/minute; 2 Sided*3: 24 pages/minute **IMPORTANT:** *1 Print speed may decrease due to factors such as paper type, paper size, and printing conditions. Print speed may also decrease for image quality adjustment. *2 When continuously printing a single document of A4 plain paper. *3 A4 continuous printing
First Print Output Time	5.2 seconds **IMPORTANT:** • Measurements based on Fuji Xerox test pattern. Time from printer startup until output of the first page is complete. In the case of feeding paper from the standard 250 sheet tray and the bypass tray. Numerics depend on the output environment. 5.7 seconds for the optional 550 sheet feeder.
Print Resolution	600 × 600 dpi, 1,200 × 1,200 dpi (Low speed)
Tone	256 gray level

Items	Description
Paper Size	Bypass tray: A4, B5, A5, Legal (8.5 × 14"), Folio (8.5 × 13"), Letter (8.5 × 11"), Executive, C5, Com-10, DL, Monarch, Custom (Width: 76.2 – 215.9 mm, Length: 127 – 355.6 mm) Standard 250 sheet tray: A4, B5, A5, Legal (8.5 × 14"), Folio (8.5 × 13"), Letter (8.5 × 11"), Executive, Custom (Width: 139.7 – 215.9 mm, Length: 210 – 355.6 mm) Optional 550 sheet feeder: A4, B5, A5, Legal (8.5 × 14"), Folio (8.5 × 13"), Letter (8.5 × 11"), Executive, Custom (Width: 139.7 – 215.9 mm, Length: 210 – 355.6 mm)
Paper Type	Plain (60 – 80 gsm), Plain Thick (81 – 105 gsm), Light Card (106 – 163 gsm), Heavy Card (164 – 216 gsm), Envelope, Labels, Letterhead, Hole Punched, Colored, Other Type **IMPORTANT:** • For 2 sided printing, use the 60 – 163 gsm plain paper. • Use only the recommended paper. Using paper other than that recommended for the printer can cause printing problems. Do not use special ink jet paper. For information about the kind of the recommended paper, contact your local Fuji Xerox representative. • Note that poor printing quality due to paper-related printing problems can occur when using the printer in an environment that is dry, cold, or very humid. • Printing over the printed side or on the reverse side of paper that already has been printed on can result in poor print quality. • When printing on envelopes, use envelopes that do not have adhesive applied. • The type of paper being used and environmental conditions can affect printing quality. Because of this, it is recommended that you test print and confirm proper print quality before using the printer.

Paper Tray Capacity	Standard:
	250 sheets (Standard 250 sheet tray) + 50 sheets (Bypass tray)
	Optional:
	550 sheets (Optional 550 sheet feeder)
	Maximum paper capacity:
	850 sheets (Standard + Optional 550 sheet feeder)
	IMPORTANT:
	• For special paper (cardstock, envelope, label), there is a limitation of the following.
	  • From the bottom of the tray, up to 10 mm height (Standard 250 sheet tray)
	  • From the bottom of the tray, up to 5.5 mm height (Bypass tray)
	  • From the bottom of the tray, up to 20 mm height (Optional 550 sheet feeder)
	• When using Fuji Xerox P paper (64 gsm)

Output Tray Capacity	Approximately 150 sheets (A4) (face down) **IMPORTANT:** • When using Fuji Xerox P paper (64 gsm)
2-sided Printing Feature	Standard
Memory	Standard: 256 MB (Onboard) Optional: 512 MB Maximum memory capacity: 768 MB (Standard + optional 512MB memory) **IMPORTANT:** • Depending on the function, the optional 512MB memory is required. • The above memory capacity does not guarantee print quality depending on the type and content of print data.
HDD	—
Standard Fonts	Built-in fonts PCL 5 and PCL 6 fonts: 81 fonts and 36 symbol sets PostScript® 3™: 136 fonts PDF Font: 14 fonts

Items	Description
PDL	PCL 5, PCL 6, PostScript®, FX-PDF, HBPL
Operating System	Standard: PCL 6 and PostScript® drivers Windows® 10 (32-bit) Windows® 10 (64-bit) Windows® 8.1 (32-bit) Windows® 8.1 (64-bit) Windows® 7 (32-bit) Windows® 7 (64-bit) Windows Vista® (32-bit) Windows Vista® (64-bit) Windows Server® 2012 R2 (64-bit) Windows Server® 2012 (64-bit) Windows Server® 2008 R2 (64-bit) Windows Server® 2008 (32-bit) Windows Server® 2008 (64-bit) OS X 10.11 El Capitan OS X 10.10 Yosemite OS X 10.9 Mavericks OS X 10.8 Mountain Lion Mac OS X 10.7 Lion **IMPORTANT:** • For information about the latest supported OS, visit the Fuji Xerox web site.
Connectivity	Standard: Ethernet (1000BASE-T/100BASE-TX/10BASE-T), USB 2.0 Optional: IEEE802.11 b/g/n **IMPORTANT:** • When the optional wireless printer adapter is installed on the printer, the standard Ethernet connection cannot be used.
Protocol	TCP/IP (LPD, Port9100, WSD, HTTP, HTTPS, SMTP, RARP, AutoIP, WINS, FTP, Telnet, DNS, DDNS, IPP, SNTP, SMB, NetBEUI), SNMP, DHCP, BOOTP, Bonjour® (mDNS) **IMPORTANT:** • WSD stands for Web Services on Devices.
Power Supply	AC 110 – 127 V ± 10 % ; 11 A or less; both 50/60 Hz ± 3 % AC 220 – 240 V ± 10 % ; 6 A or less; both 50/60 Hz ± 3 %
Operating Noise (main unit only)	During operation: 7.61 B; 54.3 dB (A) During stand-by: 5.3 B; 24.1 dB (A) **IMPORTANT:** • Measurements based on ISO7779 Unit B: acoustic power level (LwAd) Unit dB (A): radiated sound pressure (bystander position)
Power Consumption	AC 110 – 127 V: Maximum power consumption: 888 W or less (110 V) Sleep mode: 3.8 W or less AC 220 – 240 V: Maximum power consumption: 952 W or less (220 V) Sleep mode: 3.8 W or less
Dimensions	Width 393 × Depth 428 × Height 277 mm

Items	Description
Machine Weight	11.3 kg **IMPORTANT:** • Consumables and accessories are not included.
Usage Environment	During Use: Temperature: 10 - 32 °C; Humidity: 10 - 85 % (except malfunctions due to dew condensation) Non-Use: Temperature: -20 - 40 °C; Humidity: 5 - 85 % (except malfunctions due to dew condensation) **IMPORTANT:** • Until the conditions (temperature and humidity) inside the printer become acclimated to the installation environment, certain qualities of the paper can cause poor printing.

2

Basic Operation

This chapter includes:

- "Main Components" on page 20
- "Installing Optional Accessories" on page 24
- "Turning on the Printer" on page 36
- "Printing a Panel Settings Page" on page 37
- "Power Saver Mode" on page 38

Main Components

This section provides an overview of your DocuPrint P365 d/DocuPrint P368 d.

This section includes:

- "Front View" on page 20
- "Rear View" on page 21
- "Operator Panel" on page 22
- "Securing the Printer" on page 23

■ Front View

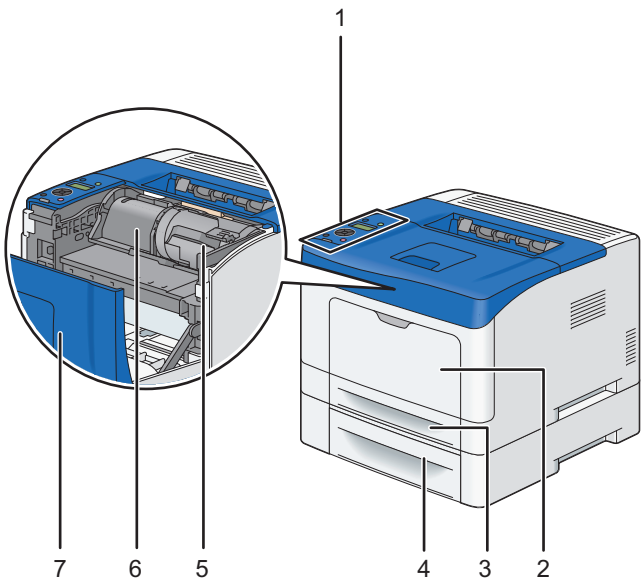

1	Operator Panel	5	Toner Cartridge
2	Bypass Tray	6	Drum Cartridge
3	Standard 250 Sheet Tray (Tray1)	7	Front Cover
4	Optional 550 Sheet Feeder (Tray2)		

IMPORTANT:

- To avoid irregular screen image or malfunctioning of your printer, avoid placing the printer in direct sunlight with the bypass tray opened.

■ Rear View

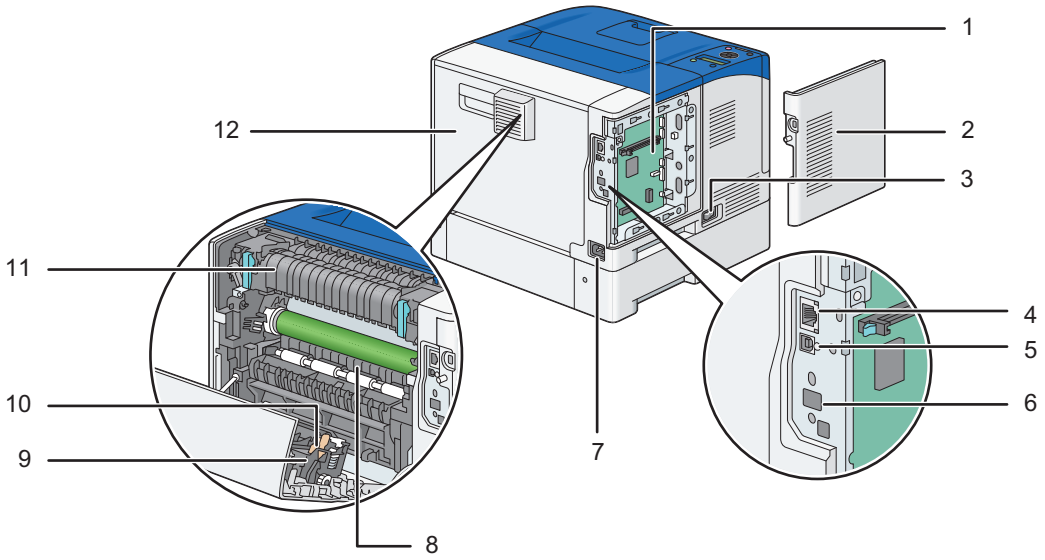

1	Control Board	7	Power Connector
2	Control Board Cover	8	Chute
3	Power Switch	9	Duplexer
4	Ethernet Port	10	Transfer Unit
5	USB Port	11	Fusing Unit
6	Wireless Adapter Socket*1	12	Rear Door

*1: The optional wireless printer adapter is not supplied in some regions.

■ Operator Panel

The operator panel has a liquid crystal display (LCD) and buttons.

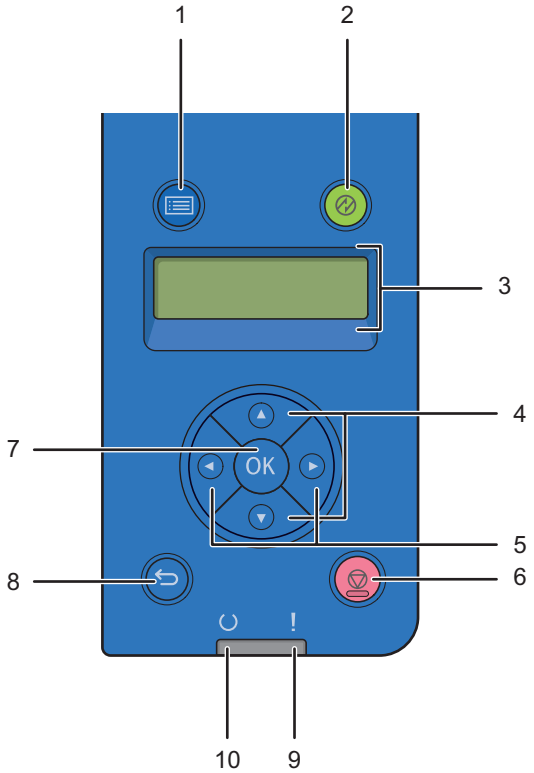

1 (**Menu**) button
- Moves to the top menu.

2 (**Energy Saver**) button
- Lights up in the Power Saver mode. Press this button to enter or exit the Power Saver mode.

3 LCD Panel
- Displays various settings, instructions, and error messages.

4 ▲ ▼ buttons
- Scrolls through menus or items in the Menu mode. To enter numbers or passwords, press these buttons.

5 ◀ ▶ buttons
- Selects submenus or setting values in the Menu mode.

6 (**Stop**) button
- Cancels the current processing or pending job.

7 (OK) button
- Displays the selected menu or item and determines the selected value in the Menu mode.

8 (**Back**) button
- Switches to the Print mode from the top menu of the Menu mode.
- Returns to the upper hierarchy of the menu from the submenu of the Menu mode.

9 **!** (**Error**) LED
- Lights up when the printer has an error.

10 (**Ready**) LED
- Lights up when the printer is ready.

■ Securing the Printer

To protect your printer from theft, you can use the Kensington lock.

Attach the Kensington lock to the security slot on your printer.

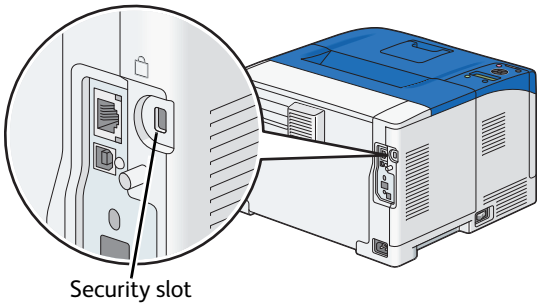

For details, see the operating instructions supplied with the Kensington lock.

Installing Optional Accessories

You can make the printer more functional by installing the optional accessories such as the 512MB Memory, the 550 Sheet Feeder, the Wireless Network Kit b/g/n, and the Font Kit. This section describes how to install these printer's options.

This section includes:

- "Installing the Optional 512MB Memory" on page 24
- "Installing the Optional 550 Sheet Feeder" on page 27
- "Installing the Optional Wireless Printer Adapter" on page 31
- "Installing the Optional Font ROM" on page 33

■ Installing the Optional 512MB Memory

NOTE:

- Your printer supports additional 512 MB memory module.

1 Turn off the printer.

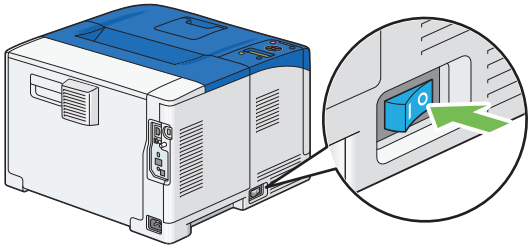

IMPORTANT:

- Note that the data in the memory are cleared when the printer is turned off.

2 Turn the screw on the control board cover counterclockwise.

NOTE:

- Loosen the screw. You do not need to remove the screw.

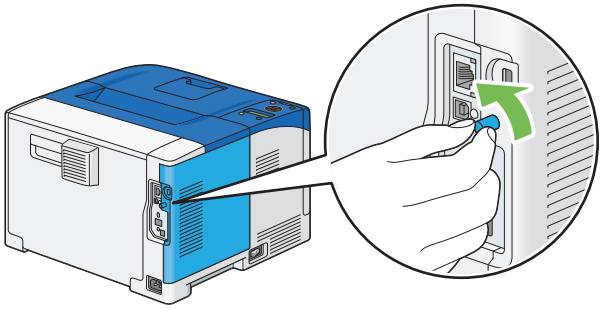

3 Slide the control board cover towards the rear of the printer and remove the cover.

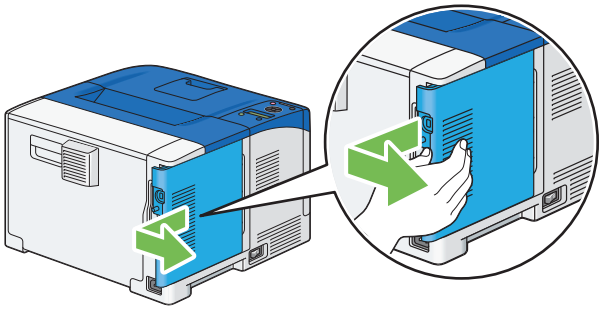

4 Hold the edge of the memory module with the labeled side down and the connector toward the control board, and then insert it into the slot.

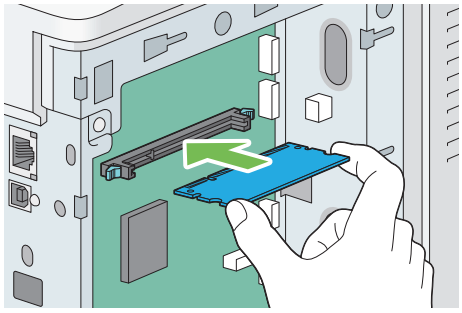

5 Push the memory module firmly into the slot.

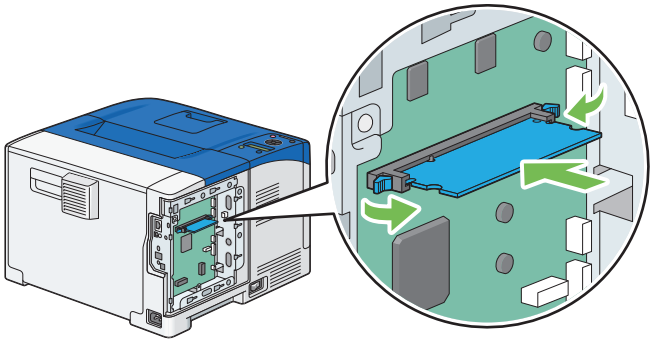

NOTE:

- Ensure that the memory module is firmly fixed in the slot and does not move easily.

6 Align the guide on the control board cover with the slot around the control board, and slide it towards the front of the printer.

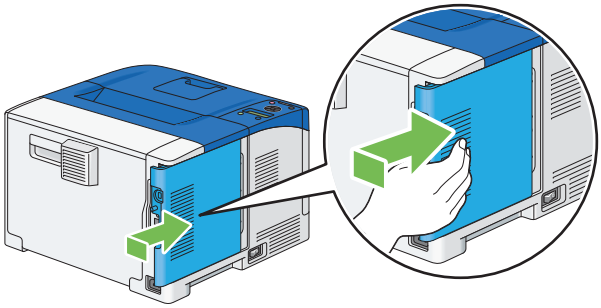

7 Turn the screw clockwise.

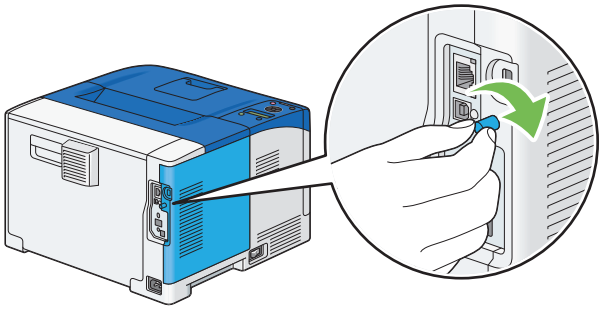

8 Turn on the printer.

9 Print the Printer Settings page to confirm that the newly installed memory module is detected by the printer.

a Press the (**Menu**) button.

b Select `Report / List`, and then press the OK button.

c Select `Printer Settings`, and then press the OK button.

The Printer Settings page is printed.

10 Confirm the amount of **Memory Capacity** listed under **General** in the Printer Settings page.

If the memory capacity has not increased, turn off the printer, and re-install the memory module.

11 If you installed the optional 512MB memory after installing the print driver, update your driver by following the instructions for the operating system you are using. If the printer is on a network, update the driver for each client.

Updating Your Driver to Detect Optional 512MB Memory

The following procedure uses the PCL 6/PS driver on Windows® 7 and Windows® 10 as examples.

NOTE:

- When you use XML Paper Specification (XPS) driver, the following settings are not required.

Windows® 7	1 Click **Start** → **Devices and Printers**. 2 Right-click the printer icon of the DocuPrint P365 d or DocuPrint P368 d and select **Printer properties**. 3 Click the **Configuration** tab, and then select **Bi-Directional Setup**. 4 Select **Get Information from Printer** and then select **OK**. 5 Click **Apply**, and then click **OK**. 6 Close the **Devices and Printers** dialog box.
Windows® 10	1 Right-Click **Start** → **Control Panel**. 2 Click **Hardware and Sound** → **Devices and Printers**. 3 Right-click the printer icon of the DocuPrint P365 d or DocuPrint P368 d and select **Printer Properties**. 4 Click the **Configuration** tab, and then select **Bi-Directional Setup**. 5 Select **Get Information from Printer** and then select **OK**. 6 Click **Apply**, and then click **OK**. 7 Close the **Devices and Printers** dialog box.

If the printer information is not updated automatically after clicking **Get Information from Printer**, follow these steps:

1 Click the **Configuration** tab, and then select **Installable Options**.

2 Select **RAM Disk** in the **Items** list box.

3 Select **Installed** in the **RAM Disk** drop-down menu under **Setting for**.

4 Select **Memory Capacity** in the **Items** list box.

5 Select the total amount of the installed printer memory in the **Memory Capacity** drop-down menu under **Setting for**.

6 Click **OK**.

7 Click **Apply**, and then click **OK**.

The following procedure uses OS X 10.11 as an example.

OS X 10.11	1 Select the **Printers & Scanners** in **System Preferences**. 2 Select the printer in the **Printers** list, and click **Options & Supplies**. 3 Select **Driver**, select the options that have been installed on the printers, and then click **OK**.

■ Installing the Optional 550 Sheet Feeder

IMPORTANT:

- If you install the optional 550 sheet feeder after setting up the printer, be sure to turn off the printer, unplug the power cord, and disconnect all cables from the rear of the printer before installing the feeder.

1 Turn off the printer.

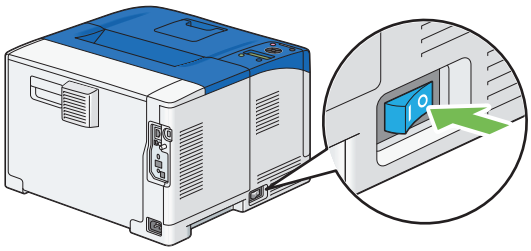

IMPORTANT:

- Note that the data in the memory are cleared when the printer is turned off.

2 Disconnect all cables from the rear of the printer.

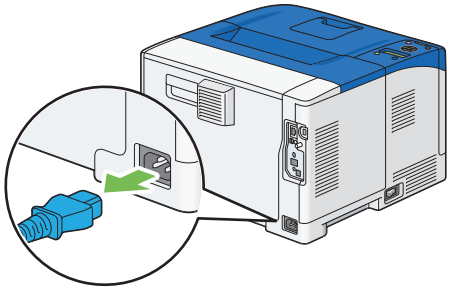

3 Remove the tape and the bag holding the screws on the front of the optional 550 sheet feeder, and then remove the screws from the bag.

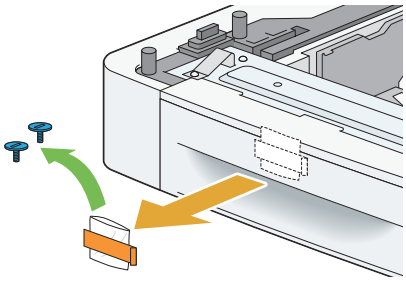

4 Place the optional 550 sheet feeder in the location that the printer is located.

5 Gently pull open the bypass tray cover.

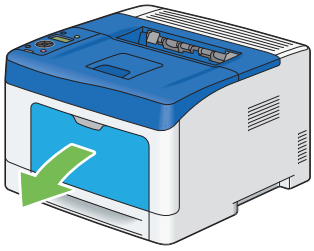

6 Grasp both sides of the bypass tray, and then pull the bypass tray from the printer.

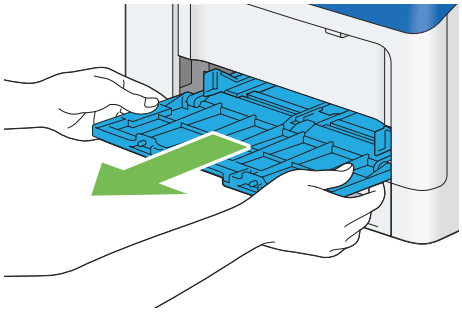

7 Pull the standard 250 sheet tray out of the printer about 200 mm.

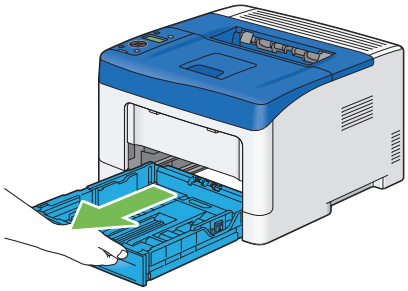

8 Hold the standard 250 sheet tray with both hands, and remove it from the printer.

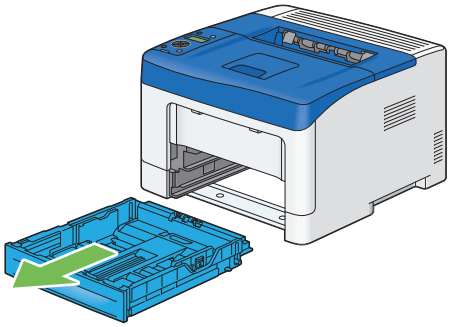

9 Lift the printer and align the five guide pins of the optional 550 sheet feeder with the holes at the bottom of the printer. Gently lower the printer onto the optional 550 sheet feeder.

IMPORTANT:

- Be careful not to pinch your fingers when lowering the printer onto the optional 550 sheet feeder.

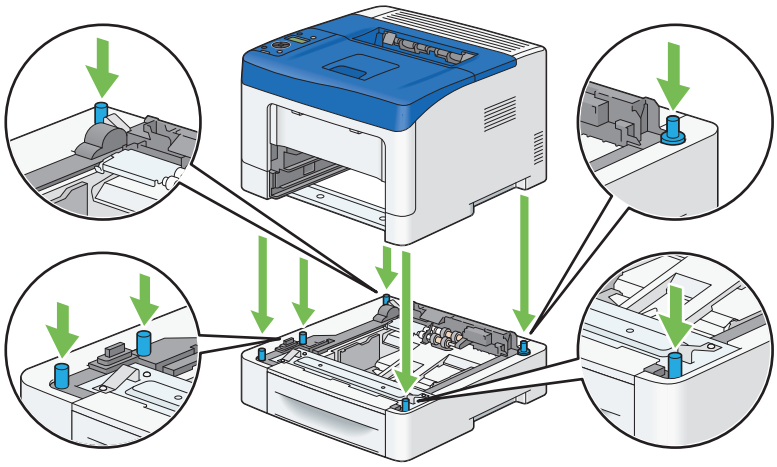

10 Secure the optional 550 sheet feeder to the printer by tightening the two screws provided with the feeder with a coin or similar object.

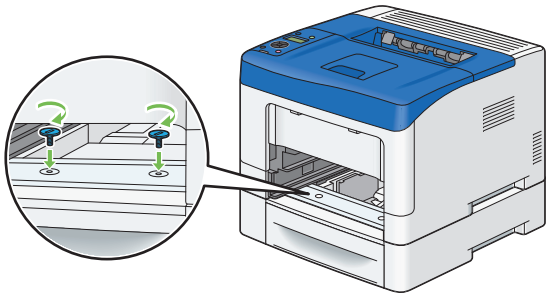

11 Insert the standard 250 sheet tray into the printer, and push until it stops.

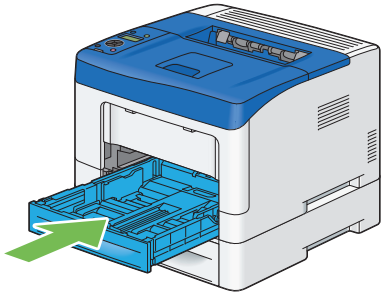

IMPORTANT:

- Do not use excessive force on the tray. Doing so could damage the tray or the inside of the printer.

12 Insert the bypass tray into the printer, push until it stops, and close the cover.

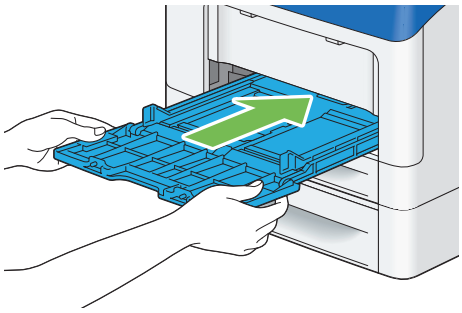

13 Apply the label to the upper part of the operator panel on the printer.

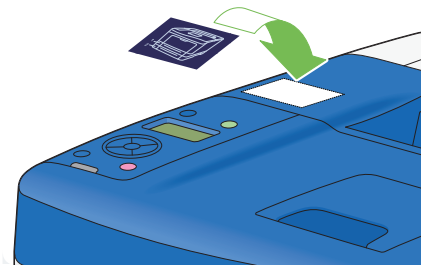

14 Reconnect all cables into the rear of the printer and turn on the printer.

NOTE:

- The printer will automatically detect the attached tray but will not detect the paper type.

15 Print the Printer Settings page to confirm the optional 550 sheet feeder is installed correctly.

a Press the (**Menu**) button.

b Select `Report / List`, and then press the OK button.

c Select `Printer Settings`, and then press the OK button.

The Printer Settings page is printed.

16 Confirm **Tray 2** (550 Sheet Feeder) is listed under **Printer Options** in the Printer Settings page.

If the feeder is not listed, turn off the printer, unplug the power cord, and re-install the optional 550 sheet feeder.

17 After loading paper in the optional 550 sheet feeder, specify the paper type from the printer operator panel.

a Press the (**Menu**) button.

b Select `Tray Settings`, and then press the (OK) button.

c Select `Tray 2`, and then press the (OK) button.

d Select `Paper Type`, and then press the (OK) button.

e Select the paper type for the optional 550 sheet feeder, and then press the (OK) button.

18 If you installed the optional 550 sheet feeder after installing the print driver, update your driver by following the instructions for each operating system. If the printer is on a network, update the driver for each client.

Updating Your Driver to Detect Optional 550 Sheet Feeder

The following procedure uses the PCL 6/PS driver on Windows® 7 and Windows® 10 as examples.

NOTE:

- When you use XML Paper Specification (XPS) driver, the following settings are not required.

Windows® 7	1 Click **Start** → **Devices and Printers**. 2 Right-click the printer icon of the DocuPrint P365 d or DocuPrint P368 d and select **Printer properties**. 3 Click the **Configuration** tab, and then select **Bi-Directional Setup**. 4 Select **Get Information from Printer** and then select **OK**. 5 Click **Apply**, and then click **OK**. 6 Close the **Devices and Printers** dialog box.
Windows® 10	1 Right-Click **Start** → **Control Panel**. 2 Click **Hardware and Sound** → **Devices and Printers**. 3 Right-click the printer icon of the DocuPrint P365 d or DocuPrint P368 d and select **Printer Properties**. 4 Click the **Configuration** tab, and then select **Bi-Directional Setup**. 5 Select **Get Information from Printer** and then select **OK**. 6 Click **Apply**, and then click **OK**. 7 Close the **Devices and Printers** dialog box.

If the printer information is not updated automatically after clicking **Get Information from Printer**, follow these steps:

1 Click the **Configuration** tab, and then select **Installable Options**.

2 Select **Paper Tray Configuration** in the **Items** list box.

3 Select **2 Trays** in the **Paper Tray Configuration** drop-down menu under **Setting for**.

4 Click **OK**.

5 Click **Apply**, and then click **OK**.

The following procedure uses OS X 10.11 as an example.

OS X 10.11	1 Select the **Printers & Scanners** in **System Preferences**. 2 Select the printer in the **Printers** list, and click **Options & Supplies**. 3 Select **Driver**, select the options that have been installed on the printers, and then click **OK**.

■ Installing the Optional Wireless Printer Adapter

The wireless printer adapter is supplied with the Wireless Network Kit b/g/n.

The wireless printer adapter allows you to use the printer with wireless network connection.

The specifications of the wireless printer adapter are described below.

NOTE:

- The optional wireless printer adapter is not supplied in some regions.

Item	Specification
Connectivity Technology	Wireless
Compliant Standards	IEEE 802.11b, 802.11g, and 802.11n
Bandwidth	2.4 GHz
Data Transfer Rate	IEEE 802.11n: 65 Mbps IEEE 802.11g: 54, 48, 36, 24, 18, 12, 9, and 6 Mbps IEEE 802.11b: 11, 5.5, 2, and 1 Mbps
Security	64 (40-bit key)/128 (104-bit key) WEP, WPA- PSK (TKIP, AES), WPA2-PSK (AES)
Wi-Fi® Protected Setup (WPS)	Push-Button Configuration (PBC), Personal Identification Number (PIN)

NOTE:

- When the wireless printer adapter is installed, you cannot use IEEE 802.1x authentication and/or the Ethernet port for a wired connection.

Verifying the Contents of the Box

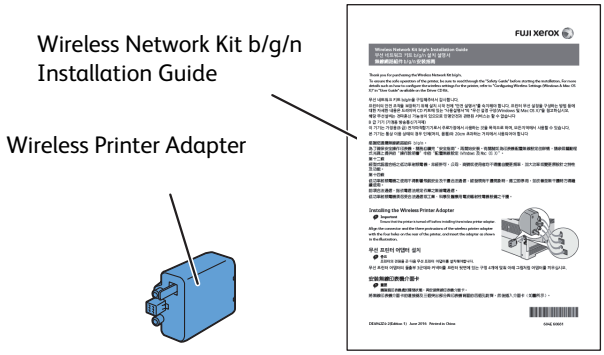

NOTE:

- To complete wireless installation, you require the *Software/Product Manual* disc that comes with your printer, which can also be downloaded from http://www.fujixerox.com/support/docuprint/.

Installing the Optional Wireless Printer Adapter Using Video Instructions (Recommended)

To install the wireless printer adapter using the video instructions on the Windows® computer, perform the following method.

1. Insert the *Software/Product Manual* disc in your computer. The **Easy Install Navi** file launches automatically.
2. Select **Optional Accessories Setup** on the **Easy Install Navi** window.
3. Click **Wireless Network Kit b/g/n**.
4. Click the procedure you want to confirm to start the video instruction.

   Follow the on-screen instructions to install the wireless printer adapter.

Installing the Optional Wireless Printer Adapter

NOTE:

- You can also install the wireless printer adapter by following the instructions described in Wireless Network Kit b/g/n Installation Guide provided with the wireless printer adapter.

1 Turn off the printer.

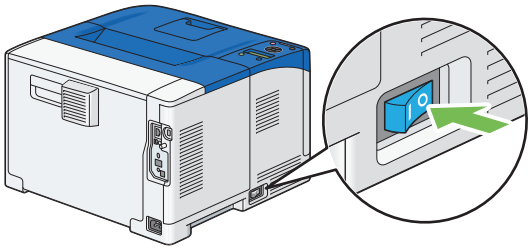

IMPORTANT:

- Note that the data in the memory are cleared when the printer is turned off.

2 Align the connector and the three protrusions of the wireless printer adapter with the four holes and insert the adapter.

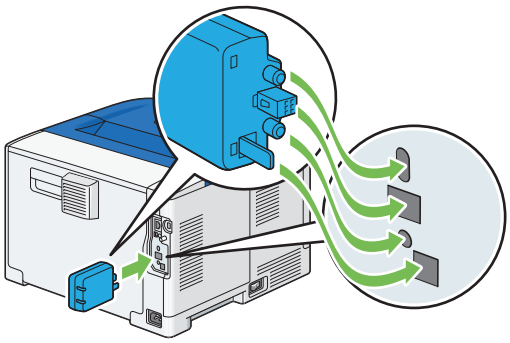

NOTE:

- Ensure that the adapter is fully inserted and secured.

3 Turn on the printer.

If a message displays telling you to make initial setup on the operator panel, always do as instructed.

4 Print the Printer Settings page to confirm the wireless printer adapter is installed correctly.

a Press the (**Menu**) button.

b Select `Report / List`, and then press the OK button.

c Select `Printer Settings`, and then press the OK button.

The Printer Settings page is printed.

5 Confirm that the **Network (Wireless)** section exists.

NOTE:

- For more information on configuring the wireless printer adapter, see "Configuring Wireless Settings (Windows® & Mac OS X)" on page 65.

■ Installing the Optional Font ROM

The Font ROM is supplied with the Font Kit.

NOTE:

- Your printer supports TC/SC Font Kit, KR Font Kit, or JP Font Kit.

1 Turn off the printer.

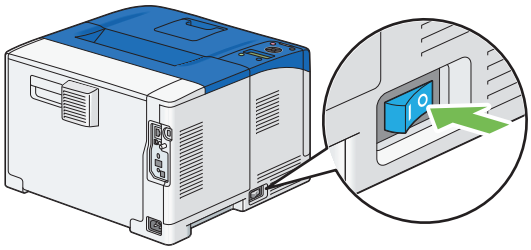

IMPORTANT:

- Note that the data in the memory are cleared when the printer is turned off.

2 Turn the screw on the control board cover counterclockwise.

NOTE:

- Loosen the screw. You do not need to remove the screw.

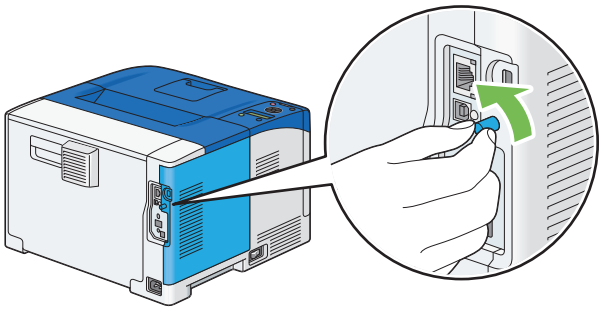

3 Slide the control board cover towards the rear of the printer and remove the cover.

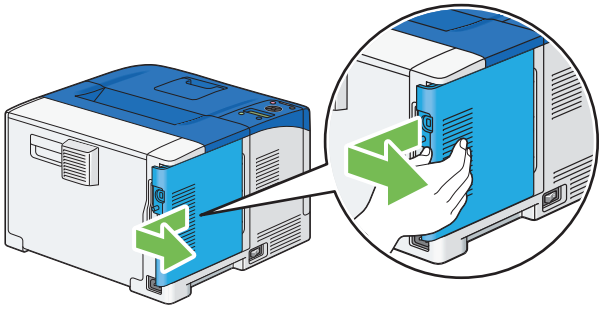

4 Open the tabs on both sides of the font ROM.

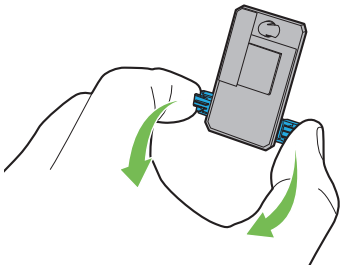

5 Hold the edge of the font ROM and the connector toward the control board, and then insert it into the slot.

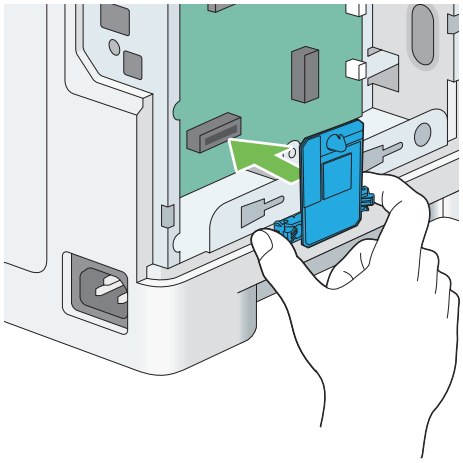

6 Push the font ROM firmly into the slot.

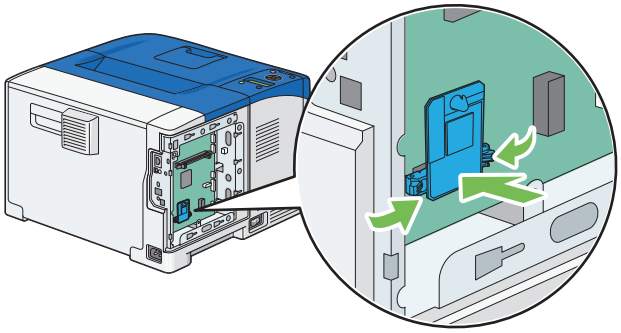

NOTE:

- Ensure that the font ROM is firmly fixed in the slot and does not move easily.

7 Align the guide on the control board cover with the slot around the control board, and slide it towards the front of the printer.

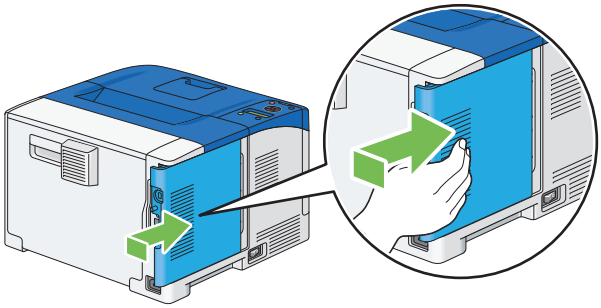

8 Turn the screw clockwise.

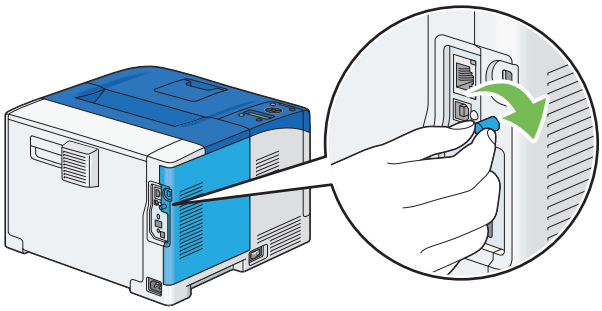

9 Turn on the printer.

10 Print the Printer Settings page to confirm that the newly installed font ROM is detected by the printer.

a Press the (**Menu**) button.

b Select `Report / List`, and then press the (OK) button.

c Select `PCL Fonts`, `PDF Fonts`, or `PS Fonts`, and then press the (OK) button.

The Fonts List page is printed.

11 Confirm the TC/SC fonts, KR fonts, or JP fonts listed in the **Fonts List** page.

If the TC/SC fonts, KR fonts, or JP fonts has not increased, turn off the printer, and re-install the font ROM.

Turning on the Printer

IMPORTANT:

- Do not use extension cords or power strips.
- The printer should not be connected to an uninterrupted power supply (UPS) system.

1 Connect the power cord to the power connector on the rear of your printer.

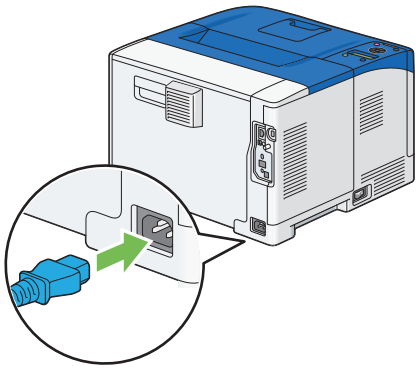

2 Connect the other end of the power cord to the power source.

3 Turn on the printer.

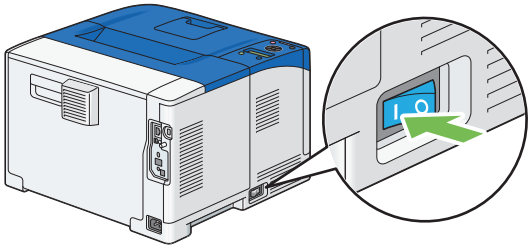

Printing a Panel Settings Page

The Panel Settings page shows current settings for the operator panel menus.

1. Press the (**Menu**) button.
2. Select `Report / List`, and then press the OK button.
3. Select `Panel Settings`, and then press the OK button.
   The Panel Settings page is printed.

Power Saver Mode

The printer has an energy saving feature that reduces power consumption during periods of inactivity. This feature operates in two modes: the Low Power mode and Sleep mode. As delivered, the printer switches to the Low Power mode one minute after the last print job is printed. The printer then switches to the Sleep mode after another one minute of inactivity. When the printer is in the Low Power mode, (**Energy Saver**) button lights up, and the LCD backlight turns off. In the Sleep mode, the display also goes blank and displays nothing.

The factory default setting of one minute for each mode is changeable within the range of 1 to 60 minutes (Low Power mode and Sleep mode). The printer returns to the ready-to-print state in about 16 seconds when re-activated.

The printer can switch from the ready-to-print state to the Low Power mode without waiting right after pressing (**Energy Saver**) button. Press (**Energy Saver**) button to switch to Power Saver mode to save electricity.

NOTE:

- The functions of Low Power mode and Sleep mode cannot be disabled.

See also:

- "Setting the Power Saver Time Option" on page 137

■ Exiting the Power Saver Mode

The printer automatically exits the Power Saver mode when it receives a print job from a computer. To manually exit the Low Power mode, press the (**Energy Saver**) button on the operator panel. To exit the Sleep mode, press the (**Energy Saver**) button.

NOTE:

- Opening and closing a cover will cause the printer to exit the Low Power mode and the Sleep mode.
- When the printer is in the Sleep mode, all buttons on the operator panel except for the (**Energy Saver**) button do not function. To use the buttons on the operator panel, press the (**Energy Saver**) button to exit the Sleep mode.

See also:

- "Setting the Power Saver Time Option" on page 137

3

Printer Management Software

This chapter includes:

- "Print Drivers" on page 40
- "CentreWare Internet Services" on page 41
- "Document Monitor (Windows® Only)" on page 42
- "SimpleMonitor (Windows® Only)" on page 43
- "Setup Disk Creation Tool (Windows® Only)" on page 44

Print Drivers

To access all of your printer's features, install the print drivers from the *Software/Product Manual* disc or *PostScript Driver Library CD*.

- The print drivers enable your computer and printer to communicate and provide access to your printer features.

CentreWare Internet Services

This section provides information on CentreWare Internet Services, a hyper text transfer protocol (HTTP)-based web page service that is accessed through your web browser.

These pages give you instant access to printer status, and printer configuration options. Anyone on your network can access the printer using their web browser software. In administrative mode you can change the configuration of the printer, and manage your printer settings without leaving your computer.

NOTE:

- Users who are not given passwords by the administrator can still view the configuration settings and options in user mode. They will not be able to save or apply any changes to the current configuration.

■ Creating an Administrative Password

1. Launch your web browser.
2. Enter the IP address in the browser's address field, and then press the **Enter** key.
3. Click the **Properties** tab.
4. In the left navigation panel, scroll down to **Security** and select **Administrator Settings**.
5. Select **Enabled** for **Administrator Mode**.
6. In the **Administrator Login ID** field, enter a name for the administrator.

   NOTE:

   - The default ID and password are "11111" and "x-admin", respectively.
7. In the **Administrator Password** and **Re-enter Password** fields, enter a password for the administrator.
8. In the **Maximum Login Attempts** field, enter the number of login attempts allowed.
9. Click **Apply**.

   Your new password has been set and anyone with the administrator name and password can log in and change the printer configuration and settings.

Document Monitor (Windows® Only)

This is a tool to display and confirm the printer status as well as the print job specified from the computer connected to the printer via network.

You can use the Document Monitor to carry out the following operations:

- Displays (in the [Document Monitor] window) the status of print job specified for the registered printer.
- Displays the error that occurred in the printer while executing the specified print job.
- Pauses, restarts, and deletes the specified print job.

NOTE:

- Document Monitor can be installed from the *Software/Product Manual* disc.
- Document Monitor does not support IPv6 (Internet Protocol version 6).

SimpleMonitor (Windows® Only)

You can check the printer status with SimpleMonitor. Double-click the SimpleMonitor printer icon on the taskbar at the bottom right of the screen. The **Select Printer** window appears, which displays the printer name, printer connection ports, and printer status. Check the **Status** column to know the current status of your printer. You can also check the toner level of your printer.

Status Settings button: Displays the **Status Settings** dialog box and allows you to modify the SimpleMonitor settings.

Click the name of the desired printer listed on the **Select Printer** window. The **Status Monitor** window appears.

The **Status Monitor** window alerts you when there is a warning or when an error occurs, for example, when a paper jam occurs or toner is running low.

By default, the **Status Monitor** window launches when printing and an error occurs. When an error occurs, the error message appears on the **Status Monitor** window. You can specify the conditions for starting the **Status Monitor** window in **Auto start setup**.

To change the pop-up settings for the **Status Monitor** window:

The following procedure uses Windows® 7 and Windows® 10 as examples.

1. Click **Start** → **All Programs** → **Fuji Xerox** → **SimpleMonitor for Asia-Pacific** → **Activate SimpleMonitor** (for Windows® 7).
   Click **Start** → **All apps** → **Fuji Xerox** → **SimpleMonitor for Asia-Pacific** → **Activate SimpleMonitor** (for Windows® 10).

   The **Select Printer** window appears.

2. Click **Status Settings**.

   The **Status Settings** dialog box appears.

3. Select the **Pop-up Settings** tab, and then select the type of the pop-up from **Auto start setup**.

NOTE:

- SimpleMonitor can be obtained by downloading from our web site at http://www.fujixeroxprinters.com/.

Setup Disk Creation Tool (Windows® Only)

The Setup Disk Creation Tool on the *Software/Product Manual* disc and the print drivers on the *Software/Product Manual* disc and *PostScript Driver Library CD* are used to create driver installation packages that contain custom driver settings. A driver installation package can contain a group of saved print driver settings and other data for things such as:

- Print orientation and Multiple Up (document settings)
- Watermarks
- Font references

If you want to install the print driver with the same settings on multiple computers running the same operating system, create a setup disk in a media or in a server on the network. Using the setup disk that you have created will reduce the amount of work required when installing the print driver.

- Install the print driver in the computer on which the setup disk is to be created.
- The setup disk can only be used on the operating system on which the disk was created or computers running the same operating system. Create a separate setup disk for each of the operating systems.

4

Printer Connection and Software Installation

This chapter includes:

- "Connecting Your Printer" on page 46
- "Setting the IP Address" on page 48
- "Installing Print Driver on Computers Running Windows®" on page 52
- "Installing Print Driver on Computers Running Mac OS X" on page 63
- "Installing Print Driver on Computers Running Linux (CUPS)" on page 64
- "Configuring Wireless Settings (Windows® & Mac OS X)" on page 65

Connecting Your Printer

Your printer interconnection cables must meet the following requirements:

Connection Type	Connection Specifications
USB	USB 2.0
Ethernet	10 Base-T/100 Base-TX/1000 Base-T
Wireless (optional)	IEEE 802.11b/802.11g/802.11n

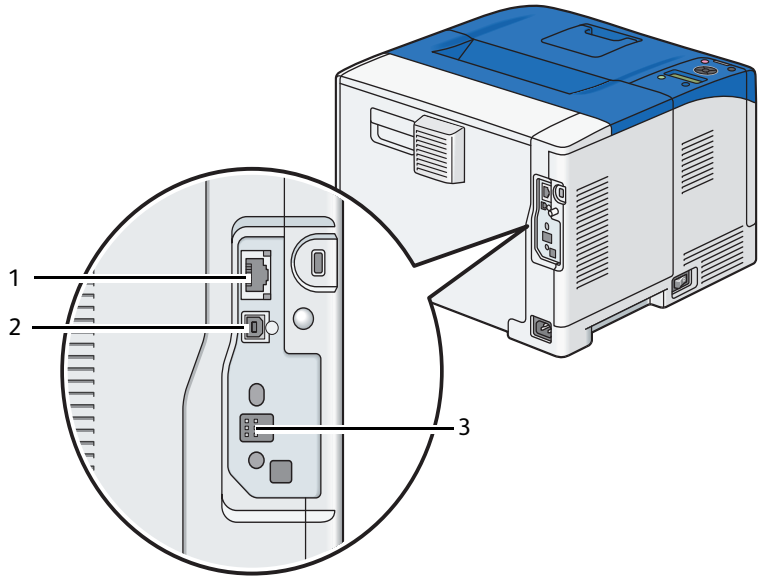

1 Ethernet port	
2 USB port	
3 Wireless adapter socket	

■ Connecting Printer to Computer or Network

Connect the printer via USB, Ethernet or wireless (optional). A USB connection is a direct connection and is not used for networking. Ethernet and wireless connections are used for networking. Hardware and cabling requirements vary for the different connection methods. Ethernet cable and hardware are generally not included with your printer and must be purchased separately.

The available features for each connection type are shown in the following table.

Connection Type	Available Features
USB	When connected via USB you can: • Instruct print jobs from a computer. • Use the SimpleMonitor to check the printer status.
Ethernet	When connected via Ethernet you can: • Instruct print jobs from a computer on the network. • Use CentreWare Internet Services to configure the printer status or settings. • Use the SimpleMonitor to check the printer status.
Wireless (optional)	When connected via wireless you can: • Instruct print jobs from a computer on the network. • Use CentreWare Internet Services to configure the printer status or settings. • Use the SimpleMonitor to check the printer status.

USB Connection

A local printer is directly connected to your computer using the USB cable. If your printer is connected to a network instead of your computer, skip this section and go to "Wired Network Connection" on page 47.

To connect the printer to a computer:

1 Connect the smaller USB connector into the USB port on the rear of the printer, and the other end of the cable into a USB port of the computer.

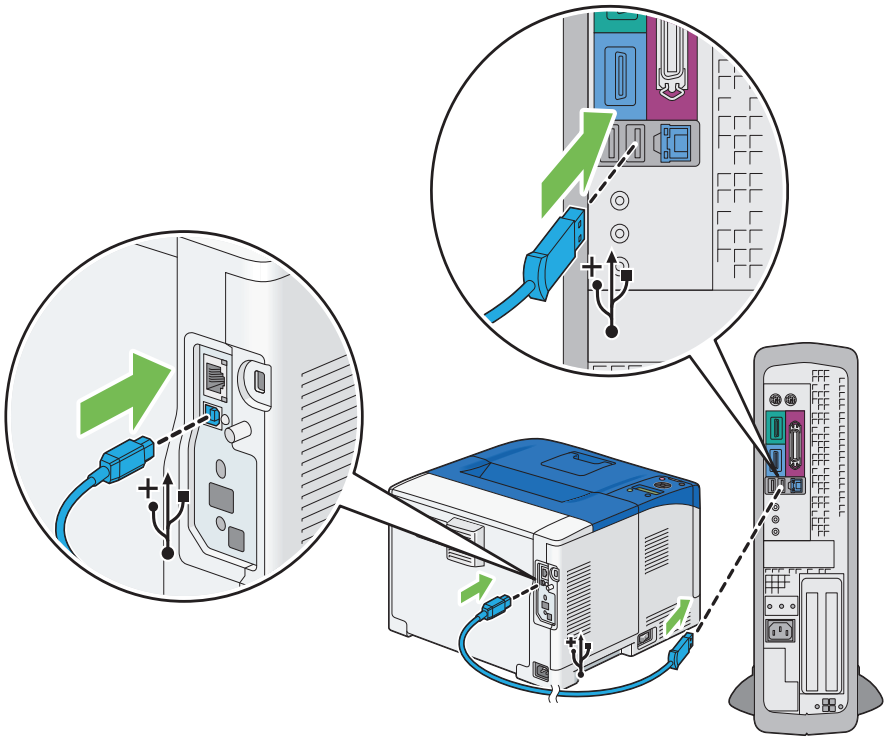

NOTE:

- Ensure that you match the USB symbol on the cable to the USB symbol on the printer.
- Do not connect the printer USB cable to the USB port available on the keyboard.

Wired Network Connection

To connect the printer to a network:

1 Connect one end of the Ethernet cable into the Ethernet port on the rear of the printer, and the other end to a LAN drop or hub.

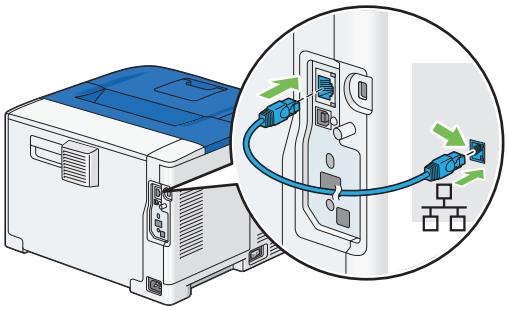

Wireless Network Connection

To set up a wireless connection, insert the optional wireless printer adapter into the wireless adapter socket on the rear of the printer. For details about wireless connection, see "Installing the Optional Wireless Printer Adapter" on page 31.

NOTE:

- To use the wireless printer adapter, be sure to disconnect the Ethernet cable.

Setting the IP Address

This section includes:

- "TCP/IP and IP Addresses" on page 48
- "Dynamic Methods of Setting the Printer's IP Address" on page 48
- "Assigning an IP Address (for IPv4 Mode)" on page 49
- "Verifying the IP Settings" on page 50
- "Printing and Checking the Printer Settings Page" on page 51

■ TCP/IP and IP Addresses

If your computer is on a large network, contact your network administrator for the appropriate TCP/IP addresses and additional system settings information.

If you are creating your own small Local Area Network or connecting the printer directly to your computer using Ethernet, follow the procedure for automatically setting the printer's IP address.

Computers and printers primarily use TCP/IP protocols to communicate over an Ethernet network. With TCP/IP protocols, each printer and computer must have a unique IP address. It is important that the addresses are similar, but not the same; only the last digit needs to be different. For example, your printer can have the address 192.168.1.2 while your computer has the address 192.168.1.3. Another device can have the address 192.168.1.4.

Many networks have a Dynamic Host Configuration Protocol (DHCP) server. A DHCP server automatically programs an IP address into every computer and printer on the network that is configured to use DHCP. A DHCP server is built into most cable and Digital Subscriber Line (DSL) routers. If you use a cable or DSL router, see your router's documentation for information on IP addressing.

■ Dynamic Methods of Setting the Printer's IP Address

There are two protocols available for dynamically setting the printer's IP address:

- DHCP (enabled by default)
- AutoIP

You can turn on/off both protocols using the operator panel or CentreWare Internet Services.

NOTE:

- You can print a report that includes the printer's IP address. On the operator panel, press the (**Menu**) button, select `Report / List`, press the OK button, select `Printer Settings`, and then press the OK button. The IP address is listed on the Printer Settings page.

Using the Operator Panel

To turn on/off either the DHCP or AutoIP protocol:

1. On the operator panel, press the (**Menu**) button.
2. Select `Admin Menu`, and then press the OK button.
3. Select `Network Setup`, and then press the OK button.
4. Select `TCP/IP`, and then press the OK button.
5. Select `IPv4`, and then press the OK button.
6. Select `Get IP Address`, and then press the OK button.
7. Select `DHCP / Autonet`, and then press the OK button.

Using CentreWare Internet Services

To turn on/off either the DHCP or AutoIP protocol:

1. Launch your web browser.
2. Enter the IP address in the browser's address field, and then press the **Enter** key.
3. Select **Properties**.
4. Select the **Protocol Settings** folder on the left navigation panel.
5. Select **TCP/IP**.
6. In the **Get IP Address** field, select the **DHCP / Autonet** option.
7. Click the **Apply** button.

■ Assigning an IP Address (for IPv4 Mode)

NOTE:

- When you assign an IP address manually in **IPv6** mode, use the CentreWare Internet Services. To display the CentreWare Internet Services, use the link local address. To check a link local address, see "Printing and Checking the Printer Settings Page" on page 51.
- Assigning an IP address is considered as an advanced function and is normally done by a system administrator.
- Depending on the address class, the range of the IP address assigned may be different. On Class A, for example, an IP address in the range from `0.0.0.0` to `127.255.255.255` will be assigned. For assignment of IP addresses, contact your system administrator.

You can assign the IP address by using the operator panel.

1. Turn on the printer.
2. Ensure that `Ready` message appears on the LCD panel.
3. On the operator panel, press the (**Menu**) button.
4. Select `Admin Menu`, and then press the OK button.
5. Select `Network Setup`, and then press the OK button.
6. Select `TCP/IP`, and then press the OK button.
7. Select `IPv4`, and then press the OK button.
8. Select `Get IP Address`, and then press the OK button.
9. Select `Panel`, and then press the OK button.
10. Ensure that the message `Restart Printer to apply setting` appears, and then press the (**Back**) button.
11. Select `IP Address`, and then press the OK button.
    The cursor is located at the first octet of the IP address.
12. Specify the value of the IP address using the ▲ or ▼ button.
13. Press the ▶ button.
    The cursor moves to the next octet.
14. Repeat steps 12 to 13 to set all of the digits in the IP address, and then press the OK button.
15. Ensure that the message `Restart Printer to apply setting` appears, and then press the (**Back**) button twice.

16 Select `Subnet Mask`, and then press the (OK) button.

The cursor is located at the first octet of the subnet mask.

17 Specify the value of the subnet mask using the ▲ or ▼ button.

18 Press the ▶ button.

The cursor moves to the next octet.

19 Repeat steps 17 to 18 to set the subnet mask, and then press the (OK) button.

20 Ensure that the message `Restart Printer to apply setting` appears, and then press the ⮌ (**Back**) button twice.

21 Select `Gateway Address`, and then press the (OK) button.

The cursor is located at the first octet of the gateway address.

22 Specify the value of the gateway address using the ▲ or ▼ button.

23 Press the ▶ button.

The cursor moves to the next octet.

24 Repeat steps 22 to 23 to set the gateway address, and then press the (OK) button.

25 Ensure that the message `Restart Printer to apply setting` appears, and then press the ⮌ (**Back**) button.

26 Turn off and turn on the printer.

IMPORTANT:

- Note that the data in the memory are cleared when the printer is turned off.

See also:

- "Operator Panel" on page 22

■ Verifying the IP Settings

You can confirm the settings by printing the system settings report or using the ping command.

The following procedure uses Windows® 7 and Windows® 10 as examples.

1 Print the Printer Settings page.

2 Look under the **IPv4** heading on the Printer Settings page to ensure that the IP address, subnet mask, and gateway address are appropriate.

To verify if the printer is active on the network, run the ping command in your computer:

1 Click **Start** → **All Programs** → **Accessories** → **Run** (for Windows® 7).

Right-click **Start** → **Run** (for Windows® 10).

2 Enter **cmd**, and then click **OK**.

A black window is displayed.

3 Enter **ping xx.xx.xx.xx** (where **xx.xx.xx.xx** is the IP address of your printer), and then press the **Enter** key.

Reply from the IP address denotes printer is active on the network.

See also:

- "Printing and Checking the Printer Settings Page" on page 51

■ Printing and Checking the Printer Settings Page

Print the Printer Settings page and check your printer's IP address by using the operator panel.

1. On the operator panel, press the (**Menu**) button.
2. Select `Report / List`, and then press the OK button.
3. Select `Printer Settings`, and then press the OK button.
   The Printer Settings page is printed.
4. Confirm the IP address next to **IP Address** under **Wired Network** on the Printer Settings page. If the IP address is **0.0.0.0**, wait for a few minutes to resolve the IP address automatically, and then print the Printer Settings page again.
   If the IP address is not resolved automatically, see "Assigning an IP Address (for IPv4 Mode)" on page 49.

Installing Print Driver on Computers Running Windows®

This section includes:

- "Identifying Print Driver Pre-install Status (For Network Connection Setup)" on page 52
- "Inserting the CD-ROM" on page 53
- "USB Connection Setup" on page 53
- "Network Connection Setup" on page 55
- "Setting Up for Shared Printing" on page 57

■ Identifying Print Driver Pre-install Status (For Network Connection Setup)

Before installing the print driver on your computer, print the Printer Settings page to check the IP address of your printer.

This section includes:

- "The Operator Panel" on page 52
- "Changing the Firewall Settings Before Installing Your Printer" on page 52

The Operator Panel

1. Press the (**Menu**) button.
2. Select `Report / List`, and then press the (OK) button.
3. Select `Printer Settings`, and then press the (OK) button.
   The Printer Settings page is printed.
4. Find the IP address next to **IP Address** under **Wired Network** on the Printer Settings page.
   If the IP address is **0.0.0.0**, wait for a few minutes to resolve the IP address automatically, and then print the Printer Settings page again.
   If the IP address is not resolved automatically, see "Assigning an IP Address (for IPv4 Mode)" on page 49.

Changing the Firewall Settings Before Installing Your Printer

If the Fuji Xerox software is blocked for use by the built-in Windows® firewall on your computer, change the firewall settings.

The following procedure uses Windows® 7 and Windows® 10 as examples.

1. Insert the *Software/Product Manual* disc into your computer.
2. Click **Start** → **Control Panel** (for Windows® 7).
   Right-click **Start** → **Run** (for Windows® 10).
3. Click **System and Security**.
4. Click **Windows Firewall**.
5. Click **Allow a program or feature through Windows Firewall** (for Windows® 7).
   Click **Allow an app or feature through Windows Firewall** (for Windows® 10).
6. Click **Change settings**.
7. Click **Allow another program** (for Windows® 7).
   Click **Allow another app** (for Windows® 10).

8 Click **Browse**.

9 Click **D:\setup.exe** (where D is the drive letter of your CD) in the **File name** text box, and then click **Open**.

10 Click **Add**.

11 Click **OK**.

■ Inserting the CD-ROM

• For Installing PCL 6 Driver

1 Insert the *Software/Product Manual* disc into your computer to start Easy Install Navi.

NOTE:

- If the CD does not start, perform the following.
  1 Click **Start** → **All Programs** → **Accessories** → **Run** (for Windows® 7).
  Right-click **Start** → **Run** (for Windows® 10).
  2 **Run**, and then enter **D:\setup.exe** (where D is the drive letter of your CD), and then click **OK**.

• For Installing PS Driver

1 Insert the *PostScript Driver Library CD* into your computer.

• For Installing XML Paper Specification (XPS) Print Driver

1 Extract the zip file in the following path to your desired location.

D:\Eng\XPS (where D is the CD drive letter)

■ USB Connection Setup

NOTE:

- A personal printer is a printer attached to your computer or a print server using a USB. If your printer is attached to a network and not your computer, see "Network Connection Setup" on page 55.

• For Installing PCL 6 Driver

1 On the top screen of Easy Install Navi, click **Installing Driver and Software**.

2 Click **Print Driver**.

3 Click **Connect via USB**.

4 Follow the procedures described in the Help to install the print driver.

• For Installing PS Driver

For information on how to install the PS driver, refer to the PostScript User Guide.

• For Installing XML Paper Specification (XPS) Print Driver

NOTE:

- XML Paper Specification (XPS) driver is supported on Windows Vista® or later.
- If you are using Windows Vista® or Windows Server® 2008, you need to install Service Pack 2 or later, and then the Windows® Platform Update (KB971644). The update (KB971644) is available for download from Windows® Update.

The following procedure uses Windows® 7 and Windows® 10 as examples.

Windows® 7

1. Click **Start** → **Devices and Printers**.
2. Click **Add a printer**.

   If the **User Account Control** dialog box appears, click **Yes**.

   NOTE:

   - If you are an administrator on the computer, click **Yes**; otherwise, contact your administrator to continue the desired action.
3. Click **Add a local printer**.
4. Select the port connected to your printer, and then click **Next**.
5. Click **Have Disk** to display the **Install From Disk** dialog box.
6. Click **Browse**, and then select the extracted setup information (.inf) file in "For Installing XML Paper Specification (XPS) Print Driver" on page 53.
7. Click **Open**.
8. Click **OK**.
9. Select your printer name and click **Next**.
10. To change the printer name, enter the printer name in the **Printer name** box, and then click **Next**.

    Installation starts.
11. If you do not share your printer, select **Do not share this printer**.

    If you share your printer, select **Share this printer so that others on your network can find and use it**.
12. Click **Next**.
13. To use this printer as the default printer, select the **Set as the default printer** check box.
14. As the driver installation is completed, click **Print a test page** to print a test page.
15. Click **Finish**.

Windows® 10

1. Right-click **Start** → **Control Panel**.
2. Click **Hardware and Sound** → **Devices and Printers** → **Add a Printer**.
3. Click **The printer that I want isn't listed**.
4. Select Add a local printer or network printer with manual settings, and then click **Next**.
5. Select the port connected to your printer, and then click **Next**.
6. Click **Have Disk** to display the **Install From Disk** dialog box.
7. Click **Browse**, and then select the extracted setup information (.inf) file in "For Installing XML Paper Specification (XPS) Print Driver" on page 53.
8. Click **Open**.
9. Click **OK**.
10. Select your printer name and click **Next**.
11. To change the printer name, enter the printer name in the **Printer name** box, and then click **Next**.

    Installation starts.

    If the **User Account Control** dialog box appears, click **Yes**.

    NOTE:
    - If you are an administrator on the computer, click **Yes**; otherwise, contact your administrator to continue the desired action.
12. If you do not share your printer, select **Do not share this printer**.

    If you share your printer, select **Share this printer so that others on your network can find and use it**.
13. Click **Next**.
14. To use this printer as the default printer, select the **Set as the default printer** check box.
15. As the driver installation is completed, click **Print a test page** to print a test page.
16. Click **Finish**.

■ Network Connection Setup

NOTE:
- To use this printer in a Linux environment, you need to install a Linux driver. For more information on how to install and use these, see also "Installing Print Driver on Computers Running Linux (CUPS)" on page 64.

• For Installing PCL 6 Driver

1. On the top screen of Easy Install Navi, click **Installing Driver and Software**.
2. Click **Print Driver**.
3. Select **Standard** or **Custom** setup.
4. Follow the on-screen instructions to install the print driver.

• For Installing PS Driver

For information on how to install the PS driver, refer to the PostScript User Guide.

• For Installing XML Paper Specification (XPS) Print Driver

NOTE:

- XML Paper Specification (XPS) driver is supported on Windows Vista® or later.
- If you are using Windows Vista® or Windows Server® 2008, you need to install Service Pack 2 or later, and then the Windows® Platform Update (KB971644). The update (KB971644) is available for download from Windows® Update.

Windows® 7

1. Click **Start** → **Devices and Printers**.
2. Click **Add a printer**.
3. Click **Add a network, wireless or Bluetooth printer**.
4. Select printer or click **The printer that I want isn't listed**.

   When you select your printer, go to step 7.

   When you click **The printer that I want isn't listed**, go to step 5.
5. Select **Add a printer using a TCP/IP address or host name**, and then click **Next**.
6. Select **TCP/IP Device** from **Device type**, and enter the IP address for **Hostname or IP address**, and then click **Next**.

   If the **User Account Control** dialog box appears, click **Yes**.

   NOTE:

   - If you are an administrator on the computer, click **Yes**; otherwise, contact your administrator to continue the desired action.
7. Click **Have Disk** to display the **Install From Disk** dialog box.
8. Click **Browse**, and then select the extracted setup information (.inf) file in "For Installing XML Paper Specification (XPS) Print Driver" on page 53.
9. Click **Open**.
10. Click **OK**.
11. Select your printer name and click **Next**.
12. To change the printer name, enter the printer name in the **Printer name** box, and then click **Next**.

    Installation starts.
13. If you do not share your printer, select **Do not share this printer**. If you share your printer, select **Share this printer so that others on your network can find and use it**.
14. Click **Next**.
15. To use this printer as the default printer, select the **Set as the default printer** check box.
16. As the driver installation is completed, click **Print a test page** to print a test page.
17. Click **Finish**.

Windows® 10

1. Right-click **Start** → **Control Panel**.
2. Click **Hardware and Sound** → **Devices and Printers** → **Add a printer**.
3. Select printer or click **The printer that I want isn't listed**.

   When you select your printer, go to step 6.

   When you click **The printer that I want isn't listed**, go to step 4.
4. Select **Add a printer using a TCP/IP address or host name**, and then click **Next**.
5. Select **TCP/IP Device** from **Device type**, and enter the IP address for **Hostname or IP address**, and then click **Next**.
6. Click **Have Disk** to display the **Install From Disk** dialog box.
7. Click **Browse**, and then select the extracted setup information (.inf) file in "For Installing XML Paper Specification (XPS) Print Driver" on page 53.
8. Click **Open**.
9. Click **OK**.
10. Select your printer name and click **Next**.
11. To change the printer name, enter the printer name in the **Printer name** box, and then click **Next**.

    Installation starts.

    If the **User Account Control** dialog box appears, click **Yes**.

    NOTE:

    - If you are an administrator on the computer, click **Yes**; otherwise, contact your administrator to continue the desired action.
12. If you do not share your printer, select **Do not share this printer**. If you share your printer, select **Share this printer so that others on your network can find and use it**.
13. Click **Next**.
14. To use this printer as the default printer, select the **Set as the default printer** check box.
15. As the driver installation is completed, click **Print a test page** to print a test page.
16. Click **Finish**.

■ Setting Up for Shared Printing

You can share your new printer on the network using the *Software/Product Manual* disc that comes with your printer, or using Microsoft® peer-to-peer method. However, if you use the Microsoft® method, some features, such as the SimpleMonitor and other printer utilities, may not be available.

If you want to use the printer on a network, share the printer and install its drivers on all the computers on the network.

The following procedure uses Windows® 7 and Windows® 10 as examples.

• For Windows® 7

1. Click **Start** → **Devices and Printers**.

2 Right-click the printer icon and select **Printer properties**.

3 On the **Sharing** tab, select the **Share this printer** check box, and then enter a name in **Share name** text box.

4 Click **Additional Drivers** and select the operating systems of all network clients that print to the printer.

5 Click **OK**.

6 Click **Apply**, and then click **OK**.

• For Windows® 10

1 Right-click **Start** → **Control Panel**.

2 Click **Hardware and Sound** → **Devices and Printers**.

3 Right-click the printer icon and select **Printer properties**.

4 On the **Sharing** tab, select the **Share this printer** check box, and then enter a name in **Share name** text box.

5 Click **Additional Drivers** and select the operating systems of all network clients that print to the printer.

6 Click **OK**.

7 Click **Apply**, and then click **OK**.

To confirm that the printer is properly shared:

- Ensure that the printer object in the **Devices and Printers** folder is shared. The shared icon is shown under the printer icon.
- Browse **Network**. Find the host name of the server and the shared name you assigned to the printer.

Now that the printer is shared, you can install the printer on network clients using the peer-to-peer method.

■ Point and Print

Point and Print is a Microsoft® Windows® technology that allows you to connect to a remote printer. This feature automatically downloads and installs the print driver.

The following procedure uses Windows® 7 and Windows® 10 as examples.

• For Windows® 7

1. On the Windows® desktop of the client computer, click **Start** → your user name → **Network**.
2. Locate the host name of the server computer, and then double-click the host name.
3. Right-click the shared printer name, and then click **Connect**.

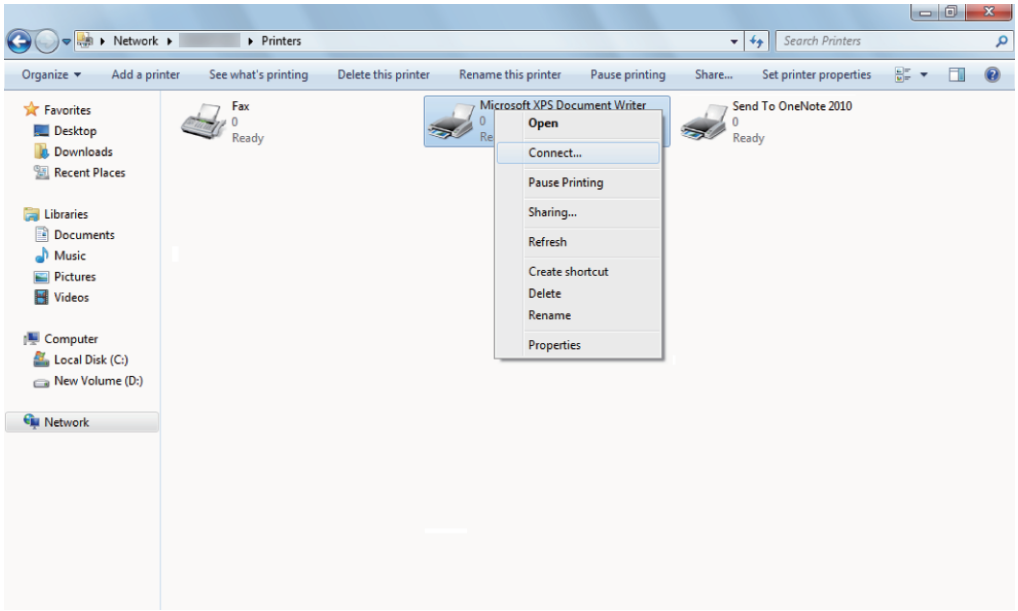

4. Click **Install driver**.
5. Wait for the driver information to be copied from the server computer to the client computer, and for a new printer object to be added to the **Devices and Printers** folder. The time this takes varies, based on network traffic and other factors.
6. Print a test page to verify installation.
   a. Click **Start** → **Devices and Printers**.
   b. Right-click the printer you just created and select **Printer properties**.
   c. On the **General** tab, click **Print Test Page**.

      When a test page prints successfully, installation is complete.

• For Windows® 10

1. Right-click **Start** → **File Explorer**.
2. Click **Network**.
3. Locate the host name of the server computer, and then double-click the host name.
4. Right-click the shared printer name, and then click **Connect**.
5. Click **Install driver**.
6. Wait for the driver information to be copied from the server computer to the client computer, and for a new printer object to be added to the **Devices and Printers** folder. The time this takes varies, based on network traffic and other factors.
7. Print a test page to verify installation.
   a. Right-click **Start** → **Control Panel**.
   b. Click **Hardware and Sound** → **Devices and Printers**.
   c. Right-click the printer you just created and select **Printer properties**.
   d. On the **General** tab, click **Print Test Page**.

      When a test page prints successfully, installation is complete.

■ Peer-to-Peer

If you use the peer-to-peer method, the print driver is fully installed on each client computer. Network clients retain control of driver modifications. The client computer handles the print job processing.

The following procedure uses Windows® 7 and Windows® 10 as examples.

• For Windows® 7

1. Click **Start** → **Devices and Printers**.
2. Click **Add a printer** to launch the **Add Printer** wizard.
3. Select **Add a network, wireless or Bluetooth printer**.

   If the printer is listed, select the printer and click **Next**.

   If the printer is not listed, click **The printer that I want isn't listed**.

   a. Click **Select a shared printer by name**

b Enter the path of the printer in the text box, and then click **Next**.

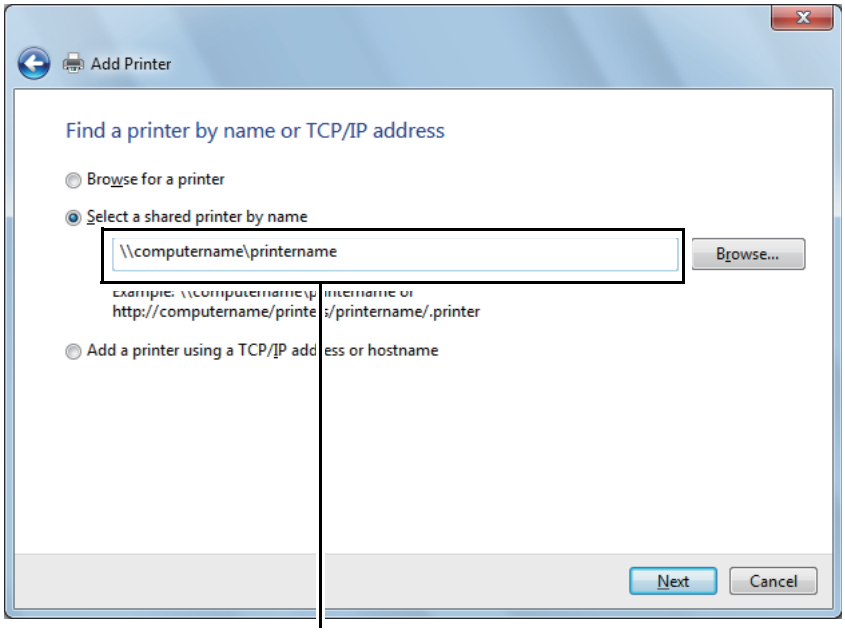

For example:\\<server host name>\<shared printer name>

The server host name is the name of the server computer that identifies it to the network. The shared printer name is the name assigned during the server installation process.

If this is a new printer, you may be prompted to install a print driver. If no system driver is available, you will need to provide the path to the available driver.

4 Confirm the printer name, and then click **Next**.

5 Specify the following settings if you want, and then click **Finish**.

- Click **Set as the default printer** to set this printer as the default printer.
- Click **Print a test page** to print a test page for verifying installation.

When a test page prints successfully, installation is complete.

• For Windows® 10

1 Right-click **Start** → **Control Panel**.

2 Click **Hardware and Sound** → **Devices and Printers**.

3 Click **Add a printer** to launch the **Add Printer** wizard.

4 Select **Add a network, wireless or Bluetooth printer**.

If the printer is listed, select the printer and click **Next**.

If the printer is not listed, click **The printer that I want isn't listed**.

a Click **Select a shared printer by name**.

b Enter the path of the printer in the text box, and then click **Next**.

The server host name is the name of the server computer that identifies it to the network. The shared printer name is the name assigned during the server installation process.

If this is a new printer, you may be prompted to install a print driver. If no system driver is available, you will need to provide the path to the available driver.

5 Confirm the printer name, and then click **Next**.

6 Specify the following settings if you want, and then click **Finish**.

- Click **Set as the default printer** to set this printer as the default printer.
- Click **Print a test page** to print a test page for verifying installation.

When a test page prints successfully, installation is complete.

Installing Print Driver on Computers Running Mac OS X

For information on how to install the print driver, refer to the PostScript User Guide.

Installing Print Driver on Computers Running Linux (CUPS)

Visit http://www.fujixeroxprinters.com/ to download and install print drivers for Linux computers.

Configuring Wireless Settings (Windows® & Mac OS X)

This section includes:

- "Determining the Wireless Network Settings" on page 65
- "Configuring the Optional Wireless Printer Adapter" on page 66
- "Reconfiguring the Wireless Settings" on page 70

Determining the Wireless Network Settings

You need to know the settings for the wireless network to set up the wireless printer. For details of the settings, contact your network administrator.

Wireless Settings	SSID	Specifies the name that identifies the wireless network with up to 32 alphanumeric characters.
	Network Mode	Specifies the network mode from Ad-hoc or Infrastructure.
Security Settings	Security	Selects the encryption method from No Security, Mixed mode PSK*, WPA-PSK-TKIP, WPA2-PSK-AES, and WEP.
	Transmit Key	Specifies the transmit WEP key from the list.
	WEP Key	Specifies the WEP key used through the wireless network only when WEP is selected as the encryption method.
	Pass Phrase	Specifies the pass phrase of alphanumeric characters from 8 to 63 bytes long only when Mixed mode PSK*, WPA-PSK-TKIP, or WPA2-PSK-AES is selected as the encryption method.
* Mixed mode PSK automatically selects an available encryption method from WPA-PSK-TKIP, WPA-PSK-AES, or WPA2-PSK-AES.		

Configuring the Optional Wireless Printer Adapter

This section describes how to configure a wireless printer adapter through Easy Install Navi, operator panel and CentreWare Internet Services.

You can select a method to configure a wireless printer adapter from the following:

Wizard Setup through (Windows® Only)	USB cable (recommended)
	WPS-PBC*1
	WPS-PIN*2
	Operator Panel
	Ethernet Cable
	CentreWare Internet Services
Non-Wizard Setup through	WPS-PBC*1
	WPS-PIN*2
	Operator Panel
	CentreWare Internet Services

*1 WPS-PBC (Wi-Fi® Protected Setup-Push Button Configuration) is a method to authenticate and register devices required for wireless configuration, by pressing the button provided on the access point via wireless routers, and then performing WPS-PBC setting on the operator panel. This setting is available only when the access point supports WPS.

*2 WPS-PIN (Wi-Fi Protected Setup-Personal Identification Number) is a method to authenticate and register devices required for wireless configuration, by entering PIN assignments in the printer and computer. This setting, performed through access point, is available only when the access points of your wireless router supports WPS.

IMPORTANT:

- Ensure that the Ethernet cable has been disconnected from the printer before you configure the wireless settings other than through Ethernet cable and CentreWare Internet Services.

NOTE:

- Before you configure the wireless settings on the operator panel, you need to set up the wireless network settings on your computer. For details, refer to the manuals provided with the wireless LAN access point or if your computer provides a wireless adapter tool, configure the wireless settings using that tool.
- If the `Panel Lock Set` is set to `Enable`, you need to enter the four digit password to enter the `Admin Menu` menu.

• Using Wizard Setup to Configure a Wireless Printer Adapter (Windows® Only)

You can configure the wireless printer adapter with the following connection methods:

- USB cable
- WPS-PBC
- WPS-PIN
- Operator Panel
- Ethernet Cable
- CentreWare Internet Services

The following procedure uses USB cable for connection method as an example.

1. Insert the *Software/Product Manual* disc provided with the printer in your computer. Easy Install Navi launches automatically.
2. Click **Optional Accessories Setup**.
3. Click **Wireless Network Kit b/g/n**.
4. Click **Start wireless settings**.
5. Click **Wireless Configuration**.

6 Select **Wizard**, and then click **Next**.

7 Click **Connect the wireless printer adapter**.

The instruction video starts.

Follow the on-screen instructions to configure wireless settings.

• Using Non-Wizard Setup to Configure a Wireless Printer Adapter

For Mac OS X, you can configure a wireless settings only through non-wizard setup.

NOTE:

- The optional wireless printer adapter must be installed on the printer. For details about installing a wireless printer adapter, see "Installing the Optional Wireless Printer Adapter" on page 31.

You can configure the wireless printer adapter with the following connection methods:

- WPS-PBC
- WPS-PIN
- Operator Panel
- CentreWare Internet Services

WPS-PBC

You can start Push Button Control only from the operator panel.

NOTE:

- WPS-PBC (Wi-Fi Protected Setup-Push Button Configuration) is a method to authenticate and register devices required for wireless configuration by pressing the button provided on the access point via wireless routers, and then performing WPS-PBC setting on the operator panel. This setting is available only when the access point supports WPS.

1 Press the (**Menu**) button.

2 Select `Admin Menu`, and then press the OK button.

3 Select `Network Setup`, and then press the OK button.

4 Select `WPS Setup`, and then press the OK button.

5 Select `Push Btn. Ctrl`, and then press the OK button.

6 Select `Start`, and then press the OK button.

7 Ensure that the message `Please wait Wireless Setting` is displayed, and start pressing the button on the wireless LAN access point, within two minutes of the step 7 operation.

NOTE:

- For details about WPS operation on the wireless LAN access point, refer to the manual supplied with the wireless LAN access point.

When the WPS operation is successful and the printer is rebooted, wireless settings are correctly configured.

WPS-PIN

The PIN code of WPS-PIN can only be configured from the operator panel.

NOTE:

- WPS-PIN (Wi-Fi Protected Setup-Personal Identification Number) is a method to authenticate and register devices required for wireless configuration by entering PIN assignments to a printer and computer. This setting, performed through an access point, is available only when the access points of your wireless router supports WPS.
- Before WPS-PIN starts, you will need to enter your PIN code at the web page of the wireless LAN access point. For details, refer to the manuals provided with the wireless LAN access point.

1 Press the (**Menu**) button.

2 Select `Admin Menu`, and then press the OK button.

3 Select `Network Setup`, and then press the (OK) button.

4 Select `WPS Setup`, and then press the (OK) button.

5 Select `PIN Code`, and then press the (OK) button.

6 Write down the displayed 8-digit PIN code or select `Print PIN Code`, and then press the (OK) button. The PIN code is printed.

7 Select `Start Config.`, and then press the (OK) button.

8 Ensure that the message `Please wait Wireless Setting` is displayed, and enter the PIN code displayed on step 7 into the web page of the wireless LAN access point.

NOTE:

- For details about WPS operation on the wireless LAN access point, refer to the manual supplied with the wireless LAN access point.

When the WPS operation is successful and the printer is rebooted, wireless settings are correctly configured.

Operator Panel

Auto SSID Setup

1 Press the (**Menu**) button.

2 Select `Admin Menu`, and then press the (OK) button.

3 Select `Network Setup`, and then press the (OK) button.

4 Select `Wireless Setup`, and then press the (OK) button.

The printer automatically searches the access points on wireless network.

5 Select the desired access point, and then press the (OK) button.

If the desired access point does not appear, go to "Manual SSID Setup" on page 68.

NOTE:

- Some hidden SSID may not be displayed. If the SSID is not detected, turn on SSID broadcast from the router.

6 Enter the WEP key or pass phrase, and then press the (OK) button.

The `Restart Printer to apply setting` message appears.

7 Turn off the printer, and turn it on again to apply the settings.

Wireless settings are correctly configured.

IMPORTANT:

- Note that the data in the memory are cleared when the printer is turned off.

Manual SSID Setup

1 Press the (**Menu**) button.

2 Select `Admin Menu`, and then press the (OK) button.

3 Select `Network Setup`, and then press the (OK) button.

4 Select `Wireless Setup`, and then press the (OK) button.

5 Select `Manual Setup`, and then press the (OK) button.

6 Enter the SSID, and then press the (OK) button.

7 Select the network mode from `Infrastructure` or `Ad-hoc` depending on your environment, and then press the (OK) button.

When you select `Infrastructure`, proceed to step 8.

When you select `Ad-hoc`, proceed to step 9.

8 Select the encryption method from `Mixed mode PSK`, `WPA-PSK-TKIP`, `WPA2-PSK-AES`, or `WEP`, and then press the (OK) button.

IMPORTANT:

- Be sure to use one of the supported encryption methods to protect your network traffic.

To use Mixed mode PSK, WPA-PSK-TKIP, or WPA2-PSK-AES encryption:

a Select the desired encryption method.

b Enter the pass phrase, and then press the (OK) button.

The `Restart Printer to apply setting` message appears.

To use WEP encryption:

a Select `WEP` for the encryption method, and then press the (OK) button.

b Enter the WEP key, and then press the (OK) button.

c Select the desired transmit key from `Auto` or `WEP Key 1` to `WEP Key 4`, and then press the (OK) button.

The `Restart Printer to apply setting` message appears.

Proceed to step 12.

9 Select `WEP` for the encryption method, and then press the (OK) button.

IMPORTANT:

- Be sure to use one of the supported encryption methods to protect your network traffic.

10 Enter the WEP key, and then press the (OK) button.

11 Select the desired transmit key from `WEP Key 1` to `WEP Key 4`, and then press the (OK) button.

The `Restart Printer to apply setting` message appears.

12 Turn off the printer, and turn it on again to apply the settings.

Wireless settings are correctly configured.

IMPORTANT:

- Note that the data in the memory are cleared when the printer is turned off.

CentreWare Internet Services

1 Ensure that the printer is turned off and the wireless printer adapter is connected to the printer.

2 Connect the printer to the network with an Ethernet cable.

For details about connecting the Ethernet cable, see "Connecting Printer to Computer or Network" on page 46.

3 Turn on the printer.

4 Launch the CentreWare Internet Services by entering the IP address of the printer in your web browser.

5 Click the **Properties** tab.

6 Click **Wireless**.

7 Enter the SSID in the **SSID** text box.

8 Select **Ad hoc** or **Infrastructure** in the **Network Type** drop-down menu.

9 Select the encryption method from **WEP 128-bit HEX (26 Bytes)**, **WEP 128-bit ASCII (13 Bytes)**, **WEP 64-bit HEX (10 Bytes)**, **WEP 64-bit ASCII (5 Bytes)**, **WPA-PSK AES/WPA2-PSK AES**, **WPA-PSK TKIP,** and **Mixed Mode PSK** in the **Encryption** drop-down menu, and then set each item for the encryption method selected.

IMPORTANT:

- Be sure to use one of the supported encryption methods to protect your network traffic.

NOTE:

- For details on each item, see the Help on CentreWare Internet Services.

10 Click **Apply** to apply the settings.

11 Turn off the printer, disconnect the Ethernet cable and turn it on again.

Wireless LAN connection setting is complete.

IMPORTANT:

- Note that the data in the memory are cleared when the printer is turned off.

Reconfiguring the Wireless Settings

To change the wireless setting through the wireless connection from your computer, perform the following.

NOTE:

- Ensure that the wireless connection setting is completed in "Configuring the Optional Wireless Printer Adapter" on page 66.
- The following settings are available when the network mode is set to infrastructure in "Configuring the Optional Wireless Printer Adapter" on page 66.

1 Check the IP address of the printer.

a On the operator panel, press the (**Menu**) button.

b Select `Report / List`, and then press the (OK) button.

c Select `Printer Settings`, and then press the (OK) button.

The Printer Settings page is printed.

d Confirm the IP address next to **IP Address** under **Network (Wireless)** on the Printer Settings page.

2 Launch the CentreWare Internet Services by entering the IP address of the printer in your web browser.

3 Click the **Properties** tab.

4 Click **Wireless**.

5 Change the wireless settings of the printer.

6 Click **Apply** to apply the settings.

7 Reboot the printer.

8 Change the wireless settings on your computer or access point accordingly.

NOTE:

- To change the wireless settings on your computer, refer to the manuals provided with the wireless LAN access point or if your computer provides a wireless adapter tool, change the wireless settings using that tool.

5

Printing Basics

This chapter includes:

- "About Print Media" on page 72
- "Supported Print Media" on page 74
- "Loading Print Media" on page 78
- "Setting Paper Sizes and Types" on page 88
- "Printing" on page 89
- "Printing With Web Services on Devices (WSD)" on page 103

About Print Media

This section includes:

- "Print Media Usage Guidelines" on page 72
- "Print Media That Can Damage Your Printer" on page 73
- "Print Media Storage Guidelines" on page 73

Using paper that is not appropriate for the printer can cause paper jams, image quality problems, or printer failure. To achieve the best performance from your printer, we recommend you to use only the paper described in this section.

When using paper other than that recommended, contact the Fuji Xerox local representative office or an authorized dealer.

■ Print Media Usage Guidelines

The printer tray accommodates various sizes and types of paper and other specialty media. Follow these guidelines when loading paper and media in the tray:

- Envelopes can be printed from the bypass tray and standard 250 sheet tray.
- Fan paper or other specialty media before loading in the paper tray.
- Do not print on label stock once a label has been removed from a sheet.
- Use only paper envelopes. Do not use envelopes with windows, metal clasps, or adhesives with release strips.
- Print all envelopes single-sided only.
- Some wrinkling and embossing may occur when printing envelopes.
- Do not overload the paper tray. Do not load print media above the fill line on the inside of the width guides.
- Adjust the width guides to fit the paper size.
- If excessive jams or wrinkles occur, use paper or other media from a new package.

WARNING:

- **Do not use conductive paper such as origami paper, carbonic paper or conductively-coated paper. When paper jam occurs, it may cause short-circuit and eventually a fire accident.**

See also:

- "Loading Print Media in the Standard 250 Sheet Tray and the Optional 550 Sheet Feeder" on page 78
- "Loading Print Media in the Bypass Tray" on page 80
- "Loading Envelope in the Bypass Tray" on page 86
- "Printing on Custom Size Paper" on page 98

■ Print Media That Can Damage Your Printer

The following paper types are not recommended for use with the printer:

- Chemically treated paper used to make copies without carbon paper, also known as carbonless paper, carbonless copy paper (CCP), or no carbon required (NCR) paper.
- Preprinted paper with chemicals that may contaminate the printer.
- Preprinted paper that can be affected by the temperature in the fusing unit.
- Preprinted paper that requires a registration (the precise print location on the page) greater than ±0.09 inches, such as optical character recognition (OCR) forms.
  In some cases, you can adjust registration with your software program to successfully print on these forms.
- Coated paper (erasable bond), synthetic paper, thermal paper, and short grain paper.
- Rough-edged, rough or heavily textured surface paper, or curled paper.
- Recycled paper containing more than 25 % post-consumer waste that does not meet DIN 19 309.
- Multiple-part forms or documents.
- Print quality may deteriorate (blank spaces or blotches may appear in the text) when you print on talc or acid paper.

WARNING:

- **Do not use conductive paper such as origami paper, carbonic paper or conductively-coated paper. When paper jam occurs, it may cause short-circuit and eventually a fire accident.**

■ Print Media Storage Guidelines

For proper print media storage, the following guidelines will help to avoid media feeding problems and uneven print quality.

- Store print media in an environment where the temperature is approximately 70 °F/21 °C and the relative humidity is 40 %.
- Store print media in dark, cool, relatively dry locations. Most paper items are susceptible to damage from ultraviolet (UV) and visible light. UV radiation, which is emitted by the sun and fluorescent bulbs, is particularly damaging to paper items. The intensity and length of exposure to visible light on paper items should be reduced as much as possible.
- Maintain constant temperatures and relative humidity.
- Avoid attics, kitchens, garages, and basements for storing print media.
- Store print media flat. Print media should be stored on pallets, cartons, shelves, or in cabinets.
- Avoid having food or drinks in the area where print media is stored or handled.
- Do not open sealed packages of paper until you are ready to load them into the printer. Leave paper in the original packaging. For most commercial cut-size grades, the ream wrapper contains an inner lining that protects the paper from moisture loss or gain.
- Leave the media inside the bag until you are ready to use it; reinsert unused media in the bag and reseal it for protection. Some specialty media is packaged inside resealable plastic bags.
- Do not place anything on top of the print media packages.

Supported Print Media

Using unsuitable print media may lead to paper jams, poor print quality, breakdown and damage to your printer. To use the features of this printer effectively, use the suggested print media that is recommended here.

IMPORTANT:

- The toner may come off the print media, if it gets wet by water, rain, steam and so on. For details, contact the Fuji Xerox local representative office or an authorized dealer.

■ Usable Print Media

The types of print media that can be used on this printer are as follows:

Bypass Tray

Paper Size	A4 SEF (210 × 297 mm) B5 SEF (182 × 257 mm) A5 SEF (148 × 210 mm) Letter SEF (8.5 × 11 inches) Executive SEF (7.25 × 10.5 inches) Folio SEF (8.5 × 13 inches) Legal SEF (8.5 × 14 inches) Com 10 Envelope SEF (4.125 × 9.5 inches) Monarch Envelope SEF (3.875 × 7.5 inches) DL Envelope SEF (110 × 220 mm) C5 Envelope SEF (162 × 229 mm) Custom size*: Width: 76.2–215.9 mm (3–8.5 inches) Length: 127–355.6 mm (5 –14 inches) Custom size (duplex print)*: Width: 139.7–215.9 mm (5.5–8.5 inches) Length: 210–355.6 mm (8.27–14 inches)
Paper Type	Plain Thick Plain Lightweight Cardstock Heavyweight Cardstock Hole Punched Labels Envelope Letterhead Colored Other Type
Loading Capacity	50 sheets of standard paper

*:XML Paper Specification (XPS) driver does not support custom size paper.

Standard 250 Sheet Tray

Paper Size	A4 SEF (210 × 297 mm) B5 SEF (182 × 257 mm) A5 SEF (148 × 210 mm) Letter SEF (8.5 × 11 inches) Executive SEF (7.25 × 10.5 inches) Folio SEF (8.5 × 13 inches) Legal SEF (8.5 × 14 inches) Custom size*: Width: 139.7–215.9 mm (5.5–8.5 inches) Length: 210–355.6 mm (8.27–14 inches) Custom size (duplex print)*: Width: 139.7–215.9 mm (5.5–8.5 inches) Length: 210–355.6 mm (8.27–14 inches)
Paper Type	Plain Thick Plain Lightweight Cardstock Heavyweight Cardstock Hole Punched Labels Letterhead Colored Other Type
Loading Capacity	250 sheets of standard paper

*:XML Paper Specification (XPS) driver does not support custom size paper.

Optional 550 Sheet Feeder

Paper Size	A4 SEF (210 × 297 mm) B5 SEF (182 × 257 mm) A5 SEF (148 × 210 mm) Letter SEF (8.5 × 11 inches) Executive SEF (7.25 × 10.5 inches) Folio SEF (8.5 × 13 inches) Legal SEF (8.5 × 14 inches) Custom size*: Width: 139.7–215.9 mm (5.5–8.5 inches) Length: 210–355.6 mm (8.27–14 inches) Custom size (duplex print)*: Width: 139.7–215.9 mm (5.5–8.5 inches) Length: 210–355.6 mm (8.27–14 inches)
Paper Type	Plain Thick Plain Lightweight Cardstock Heavyweight Cardstock Hole Punched Labels Letterhead Colored Other Type
Loading Capacity	550 sheets of standard paper

*:XML Paper Specification (XPS) driver does not support custom size paper.

NOTE:

- SEF and LEF indicate the paper feed direction; SEF stands for short-edge feed. LEF stands for long-edge feed.
- For Plain paper, you can set the paper density by selecting `Adjust PaperType` (`Lightweight` or `Heavyweight`) under `Maintenance Mode` from the operator panel. Once you set the `Adjust PaperType` settings, the printer uses the settings for Plain paper.

See also:

- "Loading Print Media in the Standard 250 Sheet Tray and the Optional 550 Sheet Feeder" on page 78
- "Loading Letterhead in the Standard 250 Sheet Tray and the Optional 550 Sheet Feeder" on page 80
- "Loading Print Media in the Bypass Tray" on page 80
- "Loading Small Print Media in the Bypass Tray" on page 81
- "Loading Envelope in the Bypass Tray" on page 86
- "Loading Letterhead in the Bypass Tray" on page 87

Printing on print media that differs from the paper size or paper type selected on the print driver, or loading print media into an unsuitable paper tray for printing, may lead to paper jams. To ensure that printing is correctly done, select the correct paper size, paper type, and paper tray.

■ Recommended Print Media

Proper print media selection helps to prevent paper jams and ensures trouble-free printing.

Fuji Xerox recommends the standard print media shown in the following table. For more information, contact your local Fuji Xerox representative.

Paper Name	Weight	Paper Type
Fuji Xerox P	64 gsm	Plain (Lightweight)

Loading Print Media

Loading print media properly helps prevent jams and ensures trouble-free printing.

Before loading any print media, identify the recommended print side of the print media. This information is usually indicated on the print media package.

■ Capacity

The standard 250 sheet tray and the optional 550 sheet feeder can hold:

- 250 sheets of the standard paper (standard 250 sheet tray).
- 550 sheets of the standard paper (optional 550 sheet feeder).

The bypass tray can hold:

- 50 sheets of the standard paper.

For special paper, there is a limitation of the following.

- From the bottom of the tray, up to 10 mm height (standard 250 sheet tray)
- From the bottom of the tray, up to 5.5 mm height (bypass tray)

■ Print Media Dimensions

The maximum dimensions of print media that the standard 250 sheet tray and the optional 550 sheet feeder can handle are:

- Width: 139.7 mm (5.5 inches) to 215.9 mm (8.5 inches)
- Length: 210 mm (8.27 inches) to 355.6 mm (14 inches)

The maximum dimensions of print media that the bypass tray can handle are:

- Width: 76.2 mm (3 inches) to 215.9 mm (8.5 inches)
- Length: 127 mm (5 inches) to 355.6 mm (14 inches)

■ Loading Print Media in the Standard 250 Sheet Tray and the Optional 550 Sheet Feeder

NOTE:

- To avoid paper jams, do not remove the tray while printing is in progress.
- Use only laser print media. Do not use ink jet print media in your printer.

1 Pull the tray out of the printer about 200 mm.

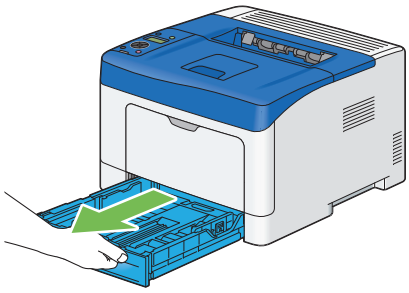

2 Hold the tray with both hands, and remove it from the printer.

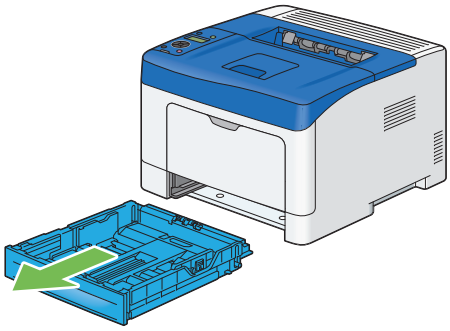

3 Adjust the paper guides.

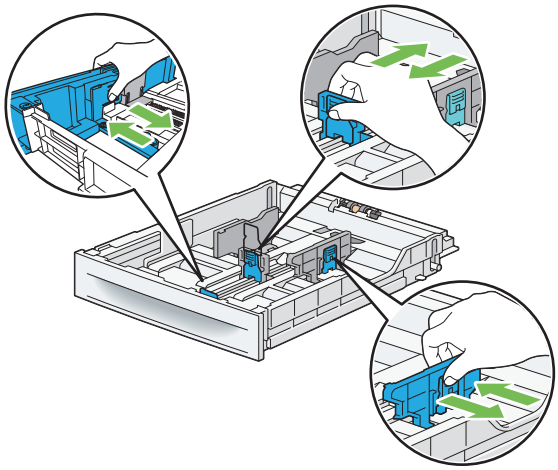

NOTE:

- When loading Legal size or user-specified print media, slide the extendable part of the tray while pinching the lever.

4 Before loading the print media, flex the sheets and fan them. Straighten the edges of the stack on a level surface.

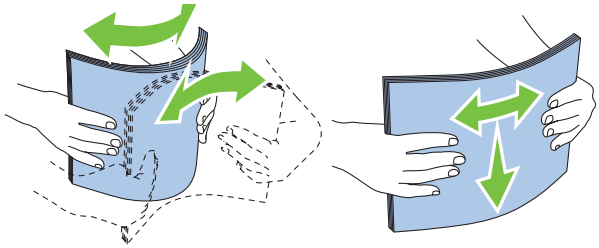

5 Load the print media into the tray with the recommended print side facing up.

NOTE:

- Do not exceed the maximum fill line in the tray. Overfilling the tray may cause paper jams.

6 Align the width guides and length guide against the edges of the print media.

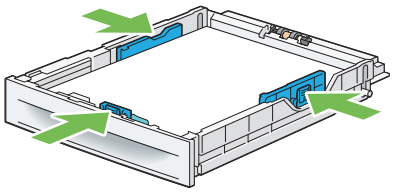

7 After confirming that the guides are securely adjusted, insert the tray into the printer.

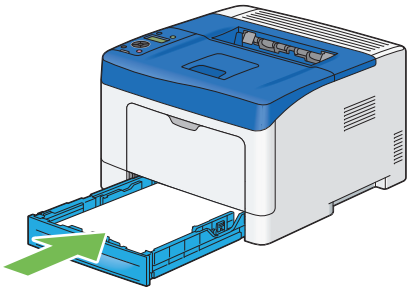

IMPORTANT:

- Do not use excessive force on the tray. Doing so could damage the tray or inside of the printer.

NOTE:

- If the front side of the tray is extended, the tray protrudes when it is inserted into the printer.

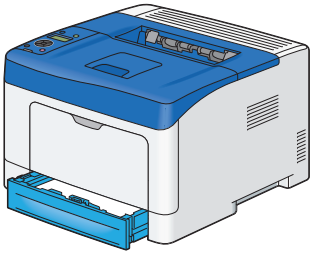

8 On the operator panel, select the appropriate paper size, and then press the (OK) button.

9 Select the appropriate paper type, and then press the (OK) button.

Loading Letterhead in the Standard 250 Sheet Tray and the Optional 550 Sheet Feeder

When you use the standard 250 sheet tray and the optional 550 sheet feeder, letterhead and hole punched paper must be inserted top edge first with the print side facing up.

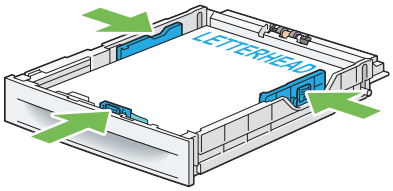

■ Loading Print Media in the Bypass Tray

1 Gently pull open the bypass tray cover.

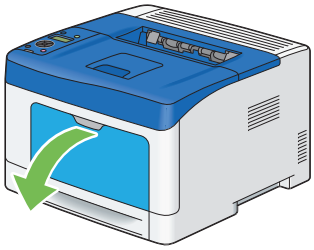

2 Slide the width guides to the edge of the tray. The width guides should be fully extended.

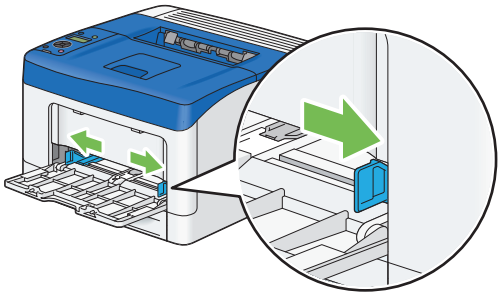

3 Insert all media face up and top edge first into the bypass tray.

NOTE:

- Do not force the print media into the bypass tray.

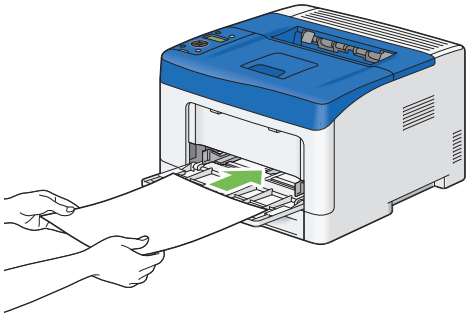

4 Slide both width guides until they rest lightly against the edge of the print media stack.

NOTE:

- Do not force the print media into the bypass tray.

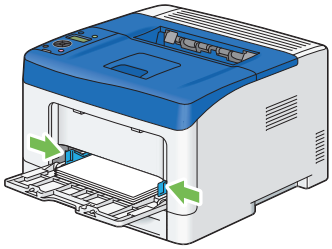

5 On the operator panel, select the appropriate paper size, and then press the (OK) button.

NOTE:

- If you use the driver setting, select `Use Driver Settings`.

6 Select the appropriate paper type, and then press the (OK) button.

Loading Small Print Media in the Bypass Tray

When loading small print media such as monarch envelope or the user-specified print media whose feed direction length is 191.6 mm or less in the bypass tray, remove the bypass tray from the printer.

1 Gently pull open the bypass tray cover.

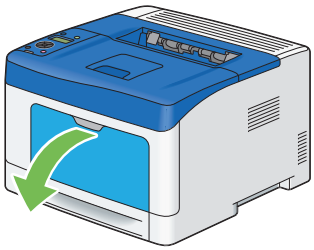

2 Grasp both sides of the bypass tray, and then pull the bypass tray from the printer.

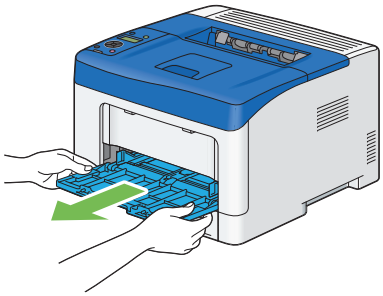

3 Slide the width guides to the edge of the tray. The width guides should be fully extended.

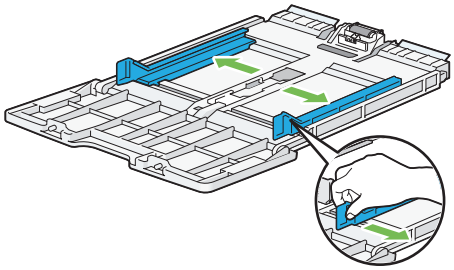

4 Pull up the length guide and slide it toward the bypass tray cover until it stops.

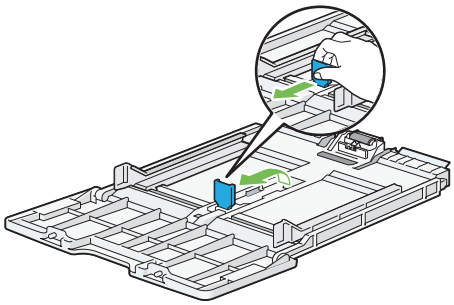

5 Load the print media into the bypass tray with the recommended print side facing up so that the top edge of the print media enters the printer first.

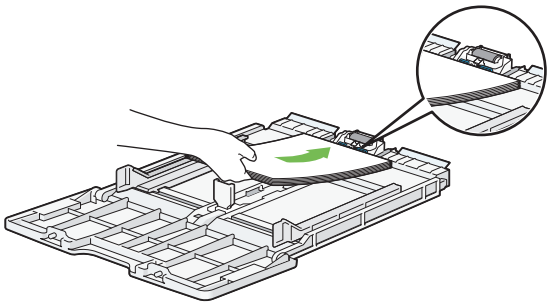

6 Align the paper guides against the edges of the print media.

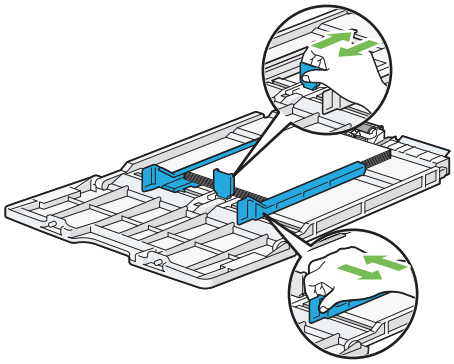

7 Insert the bypass tray into the printer.

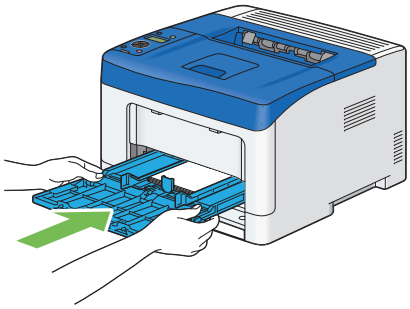

8 On the operator panel, select the appropriate paper size, and then press the (OK) button.

NOTE:

- If you use the driver setting, select `Use Driver Settings`.

9 Select the appropriate paper type, and then press the (OK) button.

Printing on Envelopes - Envelope Mode

To print on envelopes with better print quality, set the printer to the envelope mode.

NOTE:

- Print jobs can be done on envelopes even when the printer is not set to the envelope mode. To prevent envelopes from wrinkling and get the better print results, set the printer to the envelope mode.
- Be sure to cancel the envelope mode when printing on print media other than envelopes. Otherwise, it may result in poor print quality or printer malfunction.

• To Set the Printer to the Envelope Mode

1 Pull the rear door handle to open the rear door.

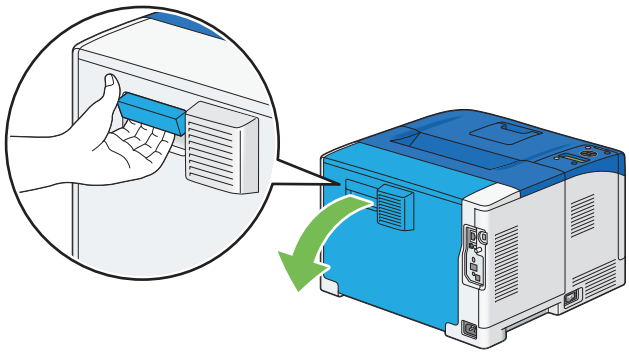

2 Lift the levers on both sides of the fusing unit.

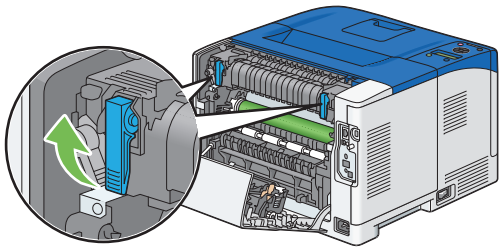

3 Slide the envelope switches on both sides of the fusing unit to the position.

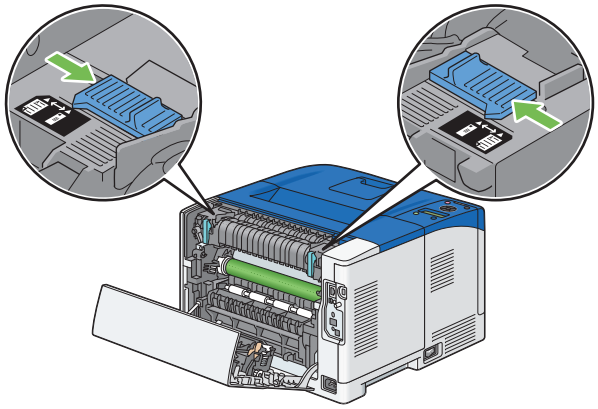

IMPORTANT:

- The fusing unit is hot. Do not touch it, doing so may cause burns.

4 Press down the levers on both sides of the fusing unit.

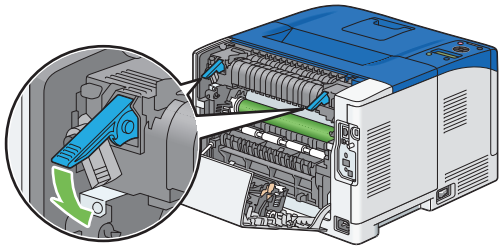

5 Close the rear door.

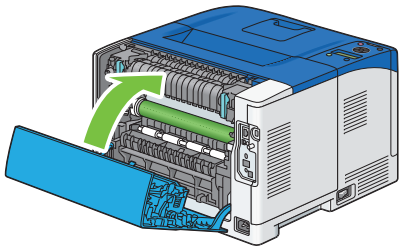

• To Cancel the Envelope Mode

1 Pull the rear door handle to open the rear door.

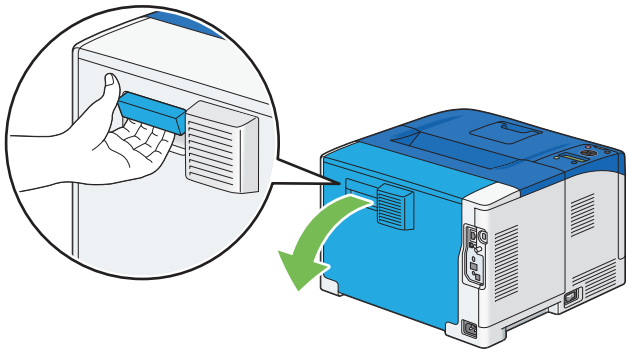

2 Lift the levers on both sides of the fusing unit.

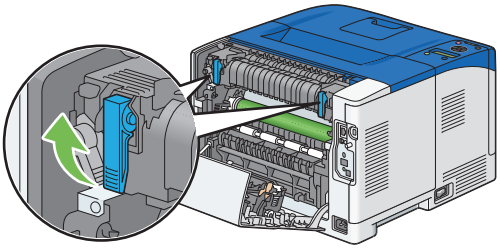

3 Slide the envelope switches on the both sides of the fusing unit to the position.

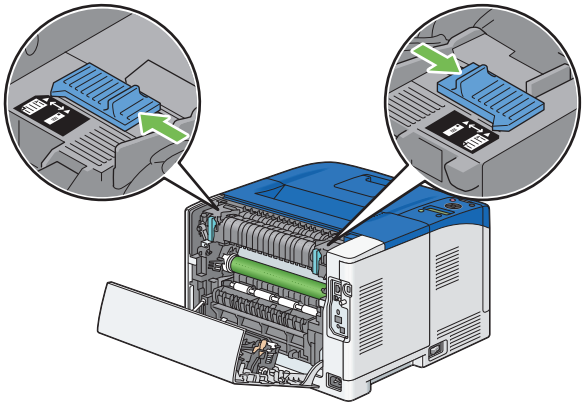

IMPORTANT:

- The fusing unit is hot. Do not touch it, doing so may cause burns.

4 Press down the levers on both sides of the fusing unit.

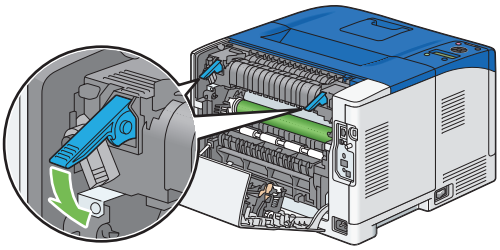

5 Close the rear door.

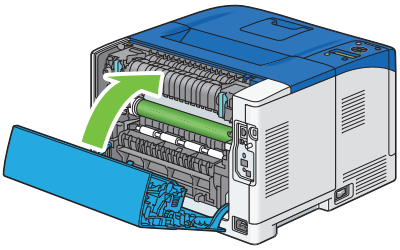

Loading Envelope in the Bypass Tray

Use the following guidelines to load each size of envelopes in the bypass tray:

IMPORTANT:

- Never use envelopes with windows, coated linings, or self-stick adhesives. These lead to paper jams and can cause damage to the printer.

NOTE:

- When five envelopes are set on the bypass tray, a misfeed may occur. If this happens, reduce the number of envelopes.
- If you do not load envelopes in the bypass tray right after they have been removed from the packaging, they may bulge. To avoid jams, flatten them as shown below before loading the envelopes in the bypass tray.

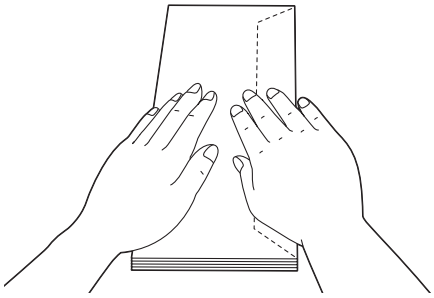

• Com 10/DL

Load the envelopes short edge feed with the flaps closed and the print side up. Ensure that the flaps come at the right when you face towards the printer.

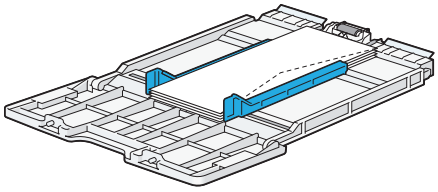

• Monarch

You need to pull up and slide the length guide. Load the envelopes short edge feed with the flaps closed and the print side up. Ensure that the flaps come at the right when you face towards the printer.

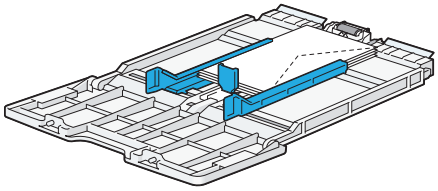

• C5

Load the envelopes short edge feed with the flaps open or closed and the print side up.

Ensure that the flaps come at the bottom with the flaps open or at the top with the flaps closed when you face towards the printer.

When you print with the orientation of the 1, position of the envelopes may be distorted on the output tray. In this case, set the orientation of the 2.

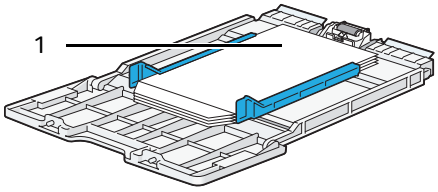

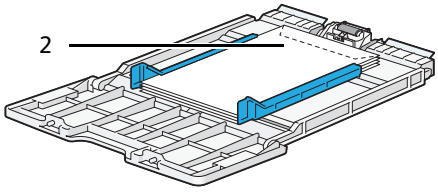

Loading Letterhead in the Bypass Tray

When you use the bypass tray, letterhead and hole punched paper must be inserted top edge first with the print side facing up.

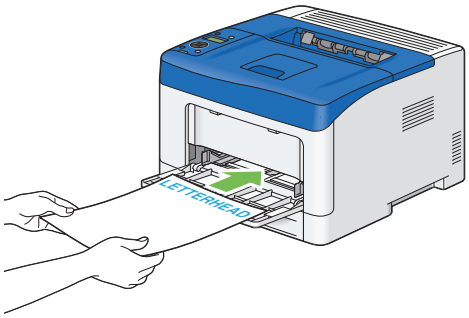

Using the Bypass Tray

- Load only one size and type of print media during a single print job.
- To achieve the best possible print quality, use only high-quality print media that is designed for use in laser printer. For more guidelines on print media, see "Print Media Usage Guidelines" on page 72.
- Do not add or remove print media when there is still print media in the bypass tray or when the printer is printing from the bypass tray. This may result in a paper jam.
- Print media should be loaded with the recommended print side up and the top of the print media going into the bypass tray first.
- Do not place objects on the bypass tray. Also, avoid pressing down or applying excessive force on it.
- The icons on the bypass tray show how to load the bypass tray with print media, and how to turn an envelope for printing.

Setting Paper Sizes and Types

When loading print media in the tray, set the paper size and type on the operator panel before printing.

See also:

- "Understanding the Printer Menus" on page 106

This section includes:

- "Setting Paper Sizes" on page 88
- "Setting Paper Types" on page 88

■ Setting Paper Sizes

1. On the operator panel, press the (**Menu**) button.
2. Select `Tray Settings`, and then press the OK button.
3. Select the desired tray, and then press the OK button.

   NOTE:

   - When you select `Bypass Tray`, `MPT Mode` is set to `Driver Specified` by default. Select `Panel Specified` for `MPT Mode` to specify the paper size and type on the operator panel.

4. Select `Paper Size`, and then press the OK button.
5. Select the correct paper size for the print media loaded, and then press the OK button.

■ Setting Paper Types

IMPORTANT:

- Paper type settings must match those of the actual print media loaded in the tray or the feeder. Otherwise, print-quality problems can occur.

1. On the operator panel, press the (**Menu**) button.
2. Select `Tray Settings`, and then press the OK button.
3. Select the desired tray, and then press the OK button.

   NOTE:

   - When you select `Bypass Tray`, `MPT Mode` is set to `Driver Specified` by default. Select `Panel Specified` for `MPT Mode` to specify the paper size and type on the operator panel.

4. Select `Paper Type`, and then press the OK button.
5. Select the correct paper type for the print media loaded, and then press the OK button.

Printing

This section covers how to print certain information from your printer and how to cancel a job.

This section includes:

- "Sending a Job to Print" on page 89
- "Canceling a Print Job" on page 89
- "Using the Stored Print Feature" on page 90
- "Selecting Printing Options" on page 93
- "Printing Custom Size Paper" on page 97
- "Auditron" on page 100
- "Checking Status of Print Data" on page 100
- "Printing a Report Page" on page 101
- "Printer Settings" on page 102

■ Sending a Job to Print

To support all of the printer features, use the print driver. When you choose **Print** from a software program, a window representing the print driver opens. Select the appropriate settings for the specific job that you are sending to print. Print settings selected from the driver override the default menu settings selected from the operator panel.

You may need to click **Preferences** from the initial **Print** box to see all of the available system settings you can change. If you are not familiar with a feature in the print driver window, open the Help for more information.

To print a job from a typical Microsoft® Windows® application:

1. Open the file you want to print.
2. From the application menu, select **Print**.
3. Verify that the correct printer is selected in the dialog box. Modify the system settings as appropriate (such as the pages you want to print or the number of copies).
4. Click **Preferences** to adjust system settings that are not available from the first screen, and then click **OK**.
5. Click **Print** to send the job to the selected printer.

■ Canceling a Print Job

There are several methods for canceling a job.

This section includes:

- "Canceling a Job From the Operator Panel" on page 89
- "Canceling a Job From a Computer Running Windows®" on page 90

Canceling a Job From the Operator Panel

To cancel a job after it has started printing:

1. Press the (**Stop**) button.

   Printing is canceled only for the current job. All the following jobs will continue to print.

Canceling a Job From a Computer Running Windows®

• Canceling a Job From the Taskbar

When you send a job to print, a small printer icon appears in the bottom right corner of the taskbar.

1. Double-click the printer icon.
   A list of print jobs appears in the printer window.
2. Select the job you want to cancel.
3. Press **Delete** key on the keyboard.
4. Click **Yes** on the **Printers** dialog box to cancel a print job.

• Canceling a Job From the Desktop

The following procedure uses Windows® 7 and Windows® 10 as examples.

1. Click **Start** → **Devices and Printers** (for Windows® 7).
   Right-click **Start** → **Control Panel** → **Hardware and Sound** → **Devices and Printers** (for Windows® 10).
   A list of available printers appears.
2. Double-click the printer that you selected when you sent the job for print.
   A list of print jobs appears in the printer window.
3. Select the job you want to cancel.
4. Press **Delete** key on the keyboard.
5. Click **Yes** on the **Printers** dialog box to cancel a print job.

■ Using the Stored Print Feature

When you send a job to the printer, you can specify in the print driver to store the job in the memory. When you are ready to print the job, go to the printer and use the operator panel menus to identify which job in the memory you want to print.

NOTE:

- The stored print feature is available when:
  - The optional 512MB memory is installed.
  - The RAM disk is enabled in the operator panel menu.
  - **RAM Disk** is set to **Installed** in the print driver.
- The data in memory is cleared when the printer is turned off.

The stored print feature includes the following job types:

- "Secure Print" on page 91
- "Sample Print" on page 91

Secure Print

You can store print jobs secured with a passcode in the memory. Users with the passcode can print them from the operator panel. This feature can be used to print confidential documents. You can select whether to delete the stored job after printing. Otherwise, the stored jobs remain in the memory until you delete them from the operator panel or turn off the printer.

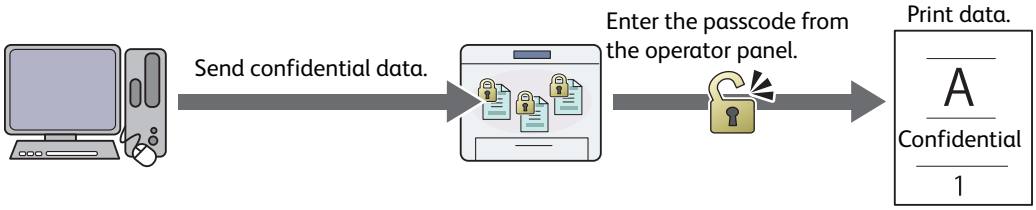

NOTE:

- Secure Print is available when you use the PCL 6 or PS driver.

Sample Print

The collated print job is stored in the memory, but a single copy is printed automatically so you can check the print result. If you do not have problems with the print result, you can choose to print more copies. This prevents large number of misprinted copies from being printed at one time.

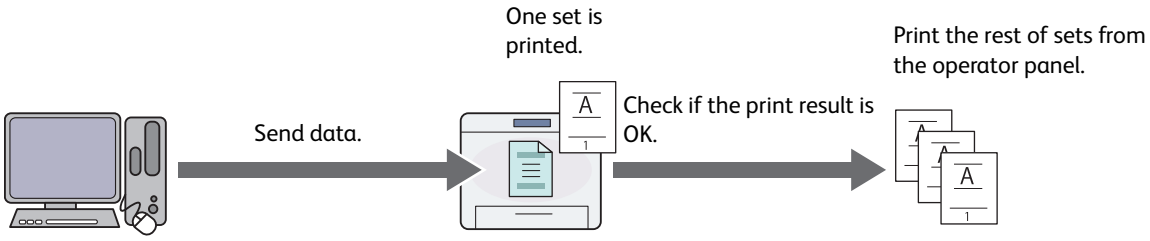

NOTE:

- Sample Print is available when you use the PCL 6 or PS driver.

Procedures for Printing Stored Print

The following are procedures for storing and printing jobs.

• Storing Print Jobs

For Secure Print, select **Secure Print** for **Job Type** and specify the user ID, passcode and job name by clicking **Setup** in the **Paper/Output** tab of the print driver. When you send the job to the printer, the job will be stored in the memory until you request to print it from the operator panel or turn off the printer.

For Sample Print, select **Sample Set** for **Job Type** and specify the user ID and job name by clicking **Setup** in the **Paper/Output** tab of the print driver. When you send the job to the printer, the first set is printed. The remaining copies will be stored in the memory until you select to print them on the operator panel or turn off the printer.

NOTE:

- If a print job is too large for the memory available, the printer may display error messages.
- If a document name is not assigned to your print job in the print driver, the job's name will be identified using the printer's time and date of submission to distinguish it from other jobs you have stored under your name.

• Printing the Stored Jobs

Once jobs are stored, you can use the operator panel to specify printing. Select the job type you are using from Secure Print and Sample Print. Then, select your user ID from a list. Secure Print requires the passcode you specified in the driver when you sent the job.

To print the stored documents, use the procedure below.

1 Press the ◀ button.

2 Select `Secure Print` or `Sample Print`, and then press the (OK) button.

3 Select your user ID, and then press the (OK) button.

If you select `Secure Print`, go to step 4.

If you select `Sample Print`, go to step 5.

4 Enter the passcode you specified in the print driver, and then press the (OK) button.

For details about specifying the passcode, see "Specifying Your Passcode on the Operator Panel (Secure Print)" on page 92.

5 Select the document you want to print, and then press the (OK) button.

6 Select `Print and Delete` or `Print and Save`, and then press the (OK) button.

7 Specify the number of copies to be printed using the ▲ and ▼ buttons, and then press the (OK) button.

The stored document will be printed.

• Specifying Your Passcode on the Operator Panel (Secure Print)

When you select your user ID for Secure Print, a screen to enter the passcode appears.

Use the buttons on the operator panel to enter the numeric passcode you specified in the print driver. The passcode you entered will be displayed as asterisks (*******) to ensure confidentiality.

If you enter an invalid passcode, the message `Wrong password Re-enter` appears. Wait three seconds, or press the (OK) button to return to the screen to enter the passcode.

When you enter a valid passcode, you have access to all print jobs matching the user name and passcode you entered. The print jobs matching the passcode you entered appear on the screen. You can then choose to print or to delete jobs matching the passcode you entered.

See also:

- "Printing the Stored Jobs" on page 91

• Deleting Stored Jobs

A job that has been stored will be deleted after printing if selected to do so on the operator panel. Otherwise, the job remains stored until you delete them on the operator panel or turn off the printer.

■ Duplex Printing

Duplex printing (or 2-sided printing) allows you to print on both sides of a sheet of paper. A4, A5, B5, Letter, Folio, Legal and Executive paper sizes are acceptable.

This section includes:

- "Using 2-Sided Print" on page 92
- "Using Booklet Print" on page 93

Using 2-Sided Print

The following procedure uses the PCL 6 driver on Windows® 7 and Windows® 10 as examples.

1 Click **Start** → **Devices and Printers** (for Windows® 7).

Right-click **Start** → **Control Panel** → **Hardware and Sound** → **Devices and Printers** (for Windows® 10).

A list of available printers appears.

2 Right-click the printer and select **Printing preferences**.

The **Paper/Output** tab appears.

3 From the drop-down menu of **Paper**, select **Select By Tray** and then select **Automatically Select**, **Tray 1**, **Tray 2**, or **Bypass Tray**.

4 From **2-Sided Print**, select **2-Sided Print** or **2-Sided Print, Flip on Short Edge**.

2-Sided Print	Assumes binding along the long edge of the page (left edge for portrait orientation and top edge for landscape orientation). The following illustration shows long-edge binding for portrait and landscape pages: 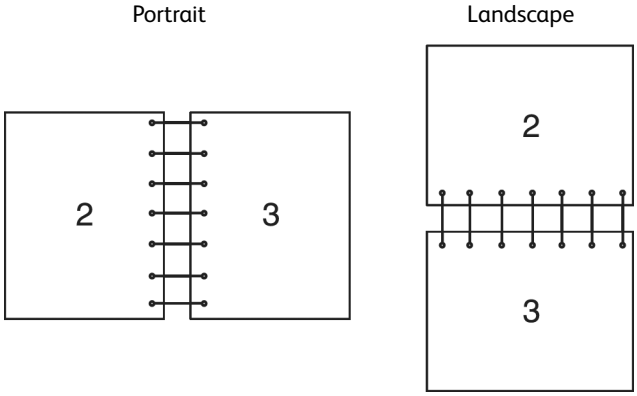
2-Sided Print, Flip on Short Edge	Assumes binding along the short edge of the page (top edge for portrait orientation and left edge for landscape orientation). The following illustration shows short-edge binding for portrait and landscape pages: 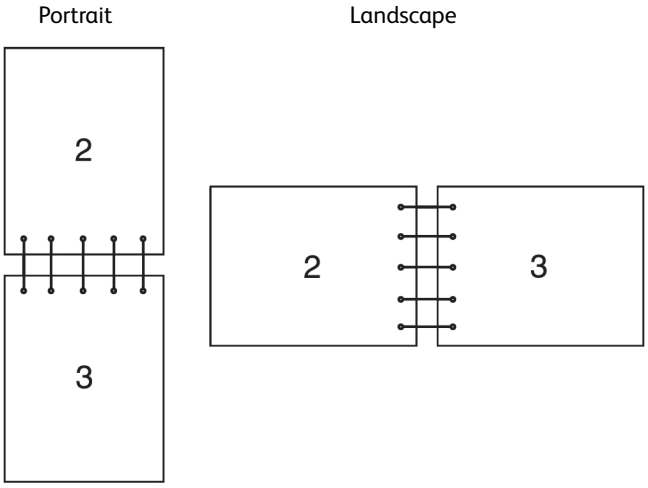

5 Click **OK**.

Using Booklet Print

To use the Booklet Print feature, select the **Booklet Layout** check box in the **Layout/Watermark** tab of the printer's **Printing Preferences** dialog box. Click **Booklet Creation** for detailed settings. The binding position is automatically set to **2-Sided Print** for **2-Sided Print** in the **Paper/Output** tab.

NOTE:

- When the XML Paper Specification (XPS) driver or the PS driver is used, the Booklet Print feature is not available.
- For details on the **2-Sided Print** option, see "2-Sided Print" on page 93.

■ Selecting Printing Options

This section includes:

- "Selecting Printing Preferences (Windows®)" on page 94
- "Selecting Options for an Individual Job (Windows®)" on page 94
- "Selecting Options for an Individual Job (Mac OS X)" on page 96

Selecting Printing Preferences (Windows®)

Printer Preferences control all of your print jobs, unless you override them specifically for a job. For example, if you want to use duplex printing for most jobs, set this option in Printing Preferences.

The following procedure uses Windows® 7 and Windows® 10 as examples.

To select Printing Preferences:

1. Click **Start** → **Devices and Printers** (for Windows® 7).

   Right-click **Start** → **Control Panel** → **Hardware and Sound** → **Devices and Printers** (for Windows® 10).

   A list of available printers appears.

2. Right-click the icon for your printer, and then select **Printing preferences**.

   The printer's **Printing Preferences** screen appears.

3. Make selections on the driver tabs, and then click **OK** to save your selections.

NOTE:

- For more information about Windows® print driver options, click **Help** on the print driver tab to view the help.

Selecting Options for an Individual Job (Windows®)

If you want to use special printing options for a particular job, change the driver settings before sending the job to the printer. For example, if you want to use Photo print-quality mode for a particular graphic, select this setting in the driver before printing that job.

1. With the desired document or graphic open in your application, access the **Print** dialog box.

2. Select your printer and click **Preferences** to open the print driver.

3. Make selections on the driver tabs.

   NOTE:

   - When using the PCL 6 or PS driver, you can save current printing options with a distinctive name and apply them to other print jobs. Select either the **Paper/Output**, **Image Options**, **Layout/Watermark**, or **Advanced** tab, and then click **Save** under **Saved Settings** on the **Paper/Output** tab. Click **Help** for more information.

4. Click **OK** to save your selections.

5. Print the job.

See the following table for specific printing options:

The table shown below uses the PCL 6 driver as an example.

Printing Options for Windows®

Driver Tab	Printing Options

Paper/Output tab	• Job Type
	• 2-Sided Print
	• Paper
	  – Size
	  – Type
	  – Select By Tray
	  – Advanced Paper Selection
	  – Covers/Separators
	• Output
	• Saved Settings
	• Envelope/Paper Setup Wizard
	• Status
	• Defaults
	• Default All

Image Options tab	• Image Quality • Image Settings • Application Reduce/Enlarge • Toner Saver • Margins • Screen • Image Shift Summary • Tone Balance • Defaults

Layout/Watermark tab	• Page Layout
	  – Pages Per Sheet (N-Up)
	  – Poster
	  – Booklet Layout
	• Page Layout Options
	• Background Form
	• Watermark
	• Annotation
	• Defaults

Advanced tab	• Advanced Settings
	  • Document Options
	  – Specify Font
	  – Paper/Output
	  – Image Options
	  – Layout/Watermark
	  – Others
	• About
	• Defaults

Selecting Options for an Individual Job (Mac OS X)

To select print settings for a particular job, change the driver settings before sending the job to the printer.

1. With the document open in your application, click **File**, and then click **Print**.
2. Select your printer from **Printer**.
3. Select the desired printing options from the menus and drop-down list boxes that are displayed.

   NOTE:

   - In Mac OS® X, click **Save As** on the **Presets** menu to save the current printer settings. You can create multiple presets and save each with its own distinctive name and printer settings. To print jobs using specific printer settings, click the applicable saved preset in the **Presets** menu.
4. Click **Print** to print the job.

Mac OS X Print Driver Printing Options:

The table shown below uses OS X 10.11 TextEdit as an example.

Printing options for Mac OS X

Item	Printing Options
	• Copies • Collated • Two-Sided • Pages • Paper Size • Orientation
Layout	• Pages per Sheet • Layout Direction • Border • Two-Sided • Reverse page orientation • Flip horizontally
Paper Handling	• Pages to Print • Page Order • Scale to fit paper size • Destination Paper Size • Scale down only
Paper Feed	• All pages From • First Page From • Remaining From
Cover Page	• Print Cover Page • Cover Page Type • Billing Info
Scheduler	• Print Document • Priority
Job Accounting	• Account Mode • User Details Setup
Job Type	• Job Type • Setup • Defaults

Item	Printing Options
Watermark	• Watermark – Edit – Delete – New • Print on Page 1 only • Defaults
Printer Features	• Feature Sets: General – Feed Orientation – Paper Type – Substitute Tray – Custom Paper Auto Orientation – Draft Mode – Skip Blank Pages – Halftone Screen Lock – Image Quality – Halftone – Letterhead Duplex Mode • Feature Sets: Color Balance K – Low Density (K) – Medium Density (K) – High Density (K)
Summary	

■ Printing Custom Size Paper

This section explains how to print on custom size paper using the print driver.

The way to load custom size paper is the same as the one to load standard size paper.

NOTE:

- You can use custom size paper between the following ranges:
  - For the standard 250 sheet tray, the optional 550 sheet feeder, and the bypass tray (duplex print)
    - Width: 139.7 mm (5.5 inches) to 215.9 mm (8.5 inches)
    - Length: 210 mm (8.27 inches) to 355.6 mm (14 inches)
  - For the bypass tray
    - Width: 76.2 mm (3 inches) to 215.9 mm (8.5 inches)
    - Length: 127 mm (5 inches) to 355.6 mm (14 inches)
- XML Paper Specification (XPS) driver does not support custom size paper.

See also:

- "Loading Print Media in the Standard 250 Sheet Tray and the Optional 550 Sheet Feeder" on page 78
- "Loading Print Media in the Bypass Tray" on page 80
- "Setting Paper Sizes and Types" on page 88

Defining Custom Paper Sizes

Before printing, set the custom size on the print driver.

NOTE:

- When setting the paper size on the print driver and the operator panel, be sure to specify the same size as the actual print media used. Setting the wrong size for printing can cause printer failure. This is especially true if you configure a bigger size when using a narrow width paper.

• Using the Windows® Print Driver

On the Windows® print driver, set the custom size in the **Custom Paper Size** dialog box. This section explains the procedure using Windows® 7 and the PCL 6 driver as an example.

An administrator's password only allows users with administrator rights to change the settings. Users without the rights of administrator can only view the contents.

1. Click **Start** → **Devices and Printers**.
2. Right-click the printer, and then select **Printer properties**.
3. Select the **Device Settings** tab.
4. Select **Custom Paper Size** and click **Setup**.
5. Select the **Create a New Form** check box.
6. Enter a name for the custom paper size in **Name**. Up to 31 characters can be used for the paper name.
7. Specify the values for **Width** and **Length** either by entering the number directly or using the up arrow and down arrow buttons.

   The value for **Width** cannot be greater than that of **Length**, even if it is within the specified range.

   NOTE:
   - You can switch the units by selecting either **Millimeters** or **Inches** under **Units**.
   - If you do not want to share the custom paper size with other users, clear the **Share it with Other Users** check box.
8. Click **Save**.
9. If necessary, repeat steps 5 to 8 to define another custom size.
10. Click **Close**.
11. Click **OK**.

Printing on Custom Size Paper

Use the following procedures to print using either the Windows® or Mac OS X print drivers.

• Using the Windows® Print Driver

To print on custom size paper using the PCL 6 driver as an example:

NOTE:
- The way to display the printer **Properties/Printing Preferences** dialog box differs according to the application software. Refer to the manual of each application software.

1. From the application menu, select **Print**.
2. Select your printer and click **Preferences**.
3. Select the **Paper/Output** tab.
4. From the drop-down menu of **Paper**, select **Advanced Paper Selection**.
5. Select the desired paper tray from **Paper Tray**.

   NOTE:
   - If you select **Bypass Tray**, **Bypass Feed Orientation** appears. Specify the orientation of the paper set on the bypass tray.
6. Select the size of the original document from **Original Document Size**.

7 Specify **Scale Options**.

If you select the custom paper size from **Original Document Size** in step 6, select **No Scaling** and go to step 9.

If you select the standard paper size from **Original Document Size** in step 6, select **Automatically Scale** and go to step 8.

8 Select the custom paper size from **Output Paper Size**.

9 Select the appropriate paper type from **Paper Type**.

10 Click **OK** twice.

11 Click **Print** in the **Print** dialog box to start printing.

• Using the Mac OS X Print Driver

This section explains the procedure using OS X 10.11 TextEdit as an example.

1 From the **File** menu, select **Page Setup**.

2 Select your printer from **Format For**.

3 From **Paper Size**, select **Manage Custom Sizes**.

4 In the **Custom Paper Sizes** window, click **+**.

A newly created setting “Untitled” is displayed in the list.

5 Double-click "Untitled" and enter the name for the setting.

6 Enter the size of the original document in the **Width** and **Height** boxes of **Paper Size**.

7 Specify **Non-Printable Area** if necessary.

8 Click **OK**.

9 Make sure that the newly created paper size is chosen in **Paper Size**, and then click **OK**.

10 From the **File** menu, select **Print**.

11 Make sure that your printer is selected in **Printer**.

12 Click **Print** to start printing.

■ Auditron

Auditron contains an authentication function that can set limits on what processes can be used, as well as an account management that can be used to control usage based on authentication.

The following illustration shows how the printer works with Auditron.

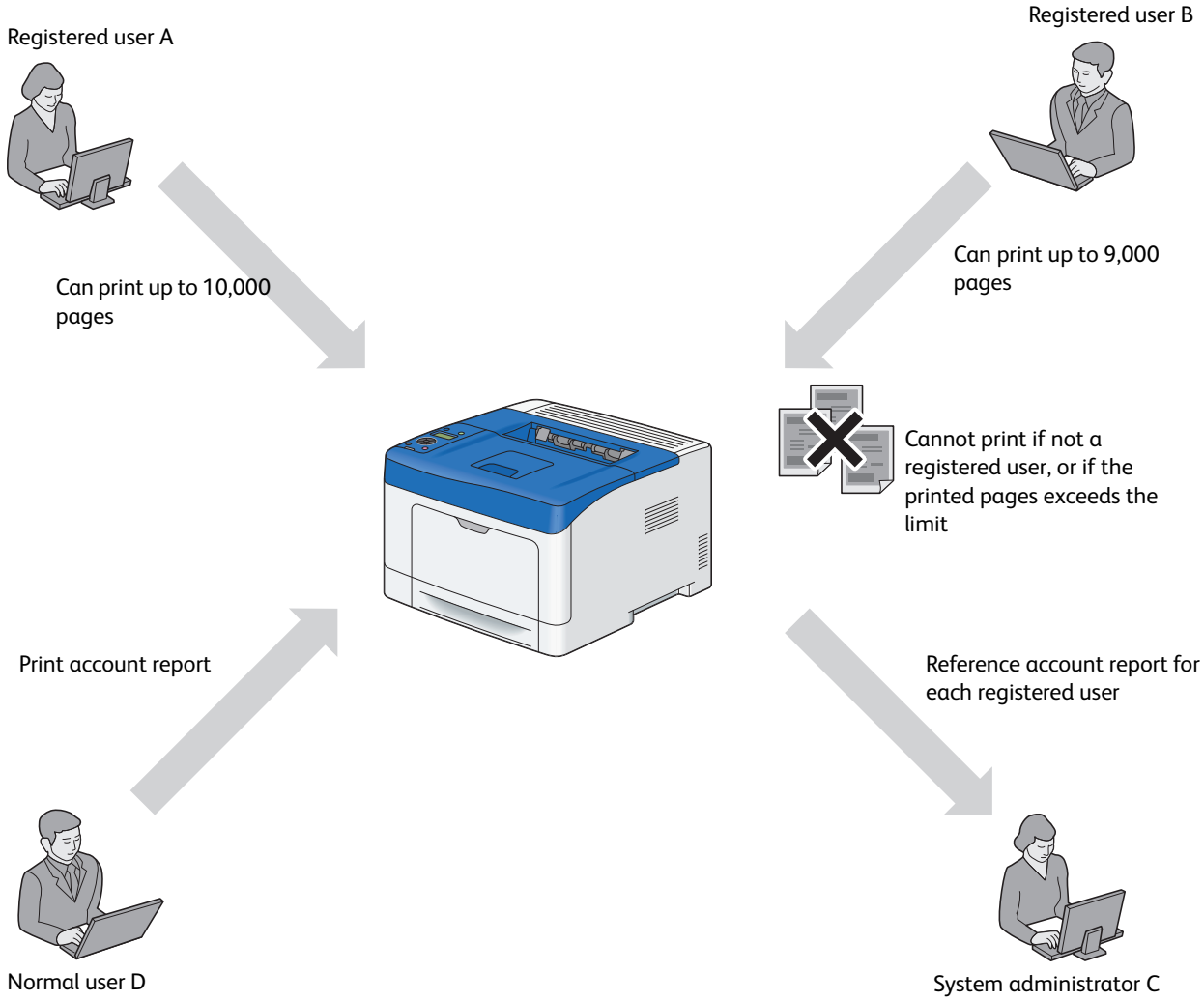

NOTE:

- You can configure the printer's Auditron settings with CentreWare Internet Services. For more information, refer to the online Help of CentreWare Internet Services.
- To print using Auditron, you need to set the print driver. For more information, refer to the Help of the driver.

■ Checking Status of Print Data

This section includes:

- "Checking Status (Windows® Only)" on page 101
- "Checking Status in CentreWare Internet Services (Windows® & Mac OS X)" on page 101

Checking Status (Windows® Only)

Printer information and status can be checked with SimpleMonitor. By default, the **Status Monitor** window launches when printing and an error occurs. To display the **Status Monitor** window manually, double-click the SimpleMonitor printer icon on the taskbar at the bottom right of the screen. From the displayed window, click the name of the desired printer listed.

For more information about SimpleMonitor, see Help: The following procedure uses Windows® 7 and Windows® 10 as examples:

1. Click **Start** → **All Programs** (for Windows® 7).
   Click **Start** → **All apps** (for Windows® 10).
2. Select **Fuji Xerox**.
3. Select **SimpleMonitor for Asia-Pacific**.
4. Select **SimpleMonitor Help**.

See also:

- "SimpleMonitor (Windows® Only)" on page 43

Checking Status in CentreWare Internet Services (Windows® & Mac OS X)

You can check the status of the print job sent to the printer at the **Jobs** tab of CentreWare Internet Services.

See also:

- "Printer Management Software" on page 39

■ Printing a Report Page

You can print a various types of reports and lists. For details on each report and list, see."Report / List" on page 106

Taking the Printer Settings page as an example, this section describes how to print a report page.

Printing a Printer Settings Page

To verify detailed printer settings, print a Printer Settings page. A printed Printer Settings page also allows you to verify whether or not options have been installed properly.

See also:

- "Understanding the Printer Menus" on page 106

1. Press the (**Menu**) button.
2. Select `Report / List`, and then press the OK button.
3. Select `Printer Settings`, and then press the OK button.
   The Printer Settings page is printed.

■ Printer Settings

You can select menu items and corresponding values from the operator panel.

When you first browse through the menus from the operator panel, you see some values marked with an asterisk (*).

These values are the factory default and original system settings.

NOTE:

- Factory defaults may vary for different regions.

When you select a new value from the operator panel, the value selected is marked with an asterisk (*) to identify it as the current user setting.

These settings are active until new ones are selected or the factory defaults are restored.

To select a new value as a setting:

1. Press the (**Menu**) button.
2. Select the desired menu, and then press the OK button.
3. Select the desired menu or menu item, and then press the OK button.
   - If the selection is a menu, the menu is opened and the first menu item in the menu appears.
   - If the selection is a menu item, the current user setting for the menu item appears with an asterisk (*).

   Each menu item has a list of values for the menu item. A value can be:
   - A phrase or word to describe a setting
   - A numerical value that can be changed
   - An On or Off setting
4. Select the desired value, and then press the OK button.
5. Press the (**Back**) or ◀ button to return to the previous menu.

   To continue setting other items, select the desired menu. To quit setting new values, press the (**Back**) button.

Driver settings may have precedence over the settings made on the operator panel.

Printing With Web Services on Devices (WSD)

This section provides information for network printing with WSD, the new Microsoft® protocol for Windows Vista®, Windows Server® 2008, Windows Server® 2008 R2, and Windows® 7.

NOTE:

- WSD stands for Web Services on Devices.

This section includes:

- "Adding Roles of Print Services" on page 103
- "Printer Setup" on page 103

■ Adding Roles of Print Services

When you use Windows Server® 2008, Windows Server® 2008 R2, or Windows Server® 2012, you need to add the roles of print services to the Windows Server® 2008, Windows Server® 2008 R2, or Windows Server® 2012 client.

• For Windows Server® 2008:

1. Click **Start** → **Administrative Tools** → **Server Manager**.
2. Select **Add Roles** from the **Action** menu.
3. Select the **Print Services** check box on the **Server Roles** window in the **Add Roles Wizard**, and then click **Next**.
4. Click **Next**.
5. Select the **Print Server** check box, and then click **Next**.
6. Click **Install**.

• For Windows Server® 2008 R2:

1. Click **Start** → **Administrative Tools** → **Server Manager**.
2. Select **Add Roles** from the **Action** menu.
3. Select the **Print and Document Services** check box on the **Server Roles** window in the **Add Roles Wizard**, and then click **Next**.
4. Click **Next**.
5. Select the **Print Server** check box, and then click **Next**.
6. Click **Install**.

■ Printer Setup

You can install your new printer on the network using the *Software/Product Manual* disc that shipped with your printer, or using Microsoft® Windows® **Add Printer** wizard. The following procedure uses the PCL 6 driver as an example.

Installing a Print Driver Using the Add Printer Wizard

1. Click **Start** → **Devices and Printers** (**Start** → **Control Panel** → **Hardware and Sound** → **Printers** for Windows Vista® and Windows Server® 2008).
2. Click **Add a printer** to launch the **Add Printer** wizard.
3. Select **Add a network, wireless or Bluetooth printer**.

4 In the list of available printers, select the one you want to use, and then click **Next**.

NOTE:

- In the list of available printers, the WSD printer is displayed in the form of **http://**IP address**/ws/**.
- If no WSD printer is displayed in the list, enter the printer's IP address manually to create a WSD printer. To enter the printer's IP address manually, follow the instructions below.
  For Windows Server® 2008 R2, to create a WSD printer, you must be a member of Administrators group.
  1 Click **The printer that I want isn't listed**.
  2 Select **Add a printer using a TCP/IP address or hostname** and click **Next**.
  3 Select **Web Services Device** from **Device type**.
  4 Enter the printer's IP address in **Hostname or IP address** and click **Next**.
- Before installing the driver using the **Add Printer** wizard on Windows Server® 2008 R2 or Windows® 7, perform one of the following:
  - Establish the Internet connection so that Windows® Update can scan your computer.
  - Add the print driver to your computer.

5 If prompted, install the print driver on your computer. If you are prompted for an administrator password or confirmation, enter the password or provide confirmation.

6 Complete the additional steps in the wizard, and then click **Finish**.

7 Configure the option settings and print a test page to verify print installation.

a Click **Start** → **Devices and Printers** (**Start** → **Control Panel** → **Hardware and Sound** → **Printers** for Windows Vista® and Windows Server® 2008).

b Right-click the printer you just created, and then click **Printer properties** (**Properties** for Windows Vista® and Windows Server® 2008).

On the **Configuration** tab, click **Installable Options** to configure the option settings, and then click **Apply**.

c On the **General** tab, click **Print Test Page**. When a test page prints successfully, installation is complete.

6

Using the Operator Panel Menus

This chapter includes:

- "Understanding the Printer Menus" on page 106
- "Panel Lock Function" on page 136
- "Setting the Power Saver Time Option" on page 137
- "Resetting to Factory Defaults" on page 138

Understanding the Printer Menus

When your printer is connected to a network and available to a number of users, the access to the `Admin Menu` can be limited. This prevents other users from using the operator panel to inadvertently change a user default that has been set by the administrator.

However, you can use your print driver to override user defaults and select settings for individual print jobs.

■ Report / List

Use the `Report / List` menu to print various types of reports and lists.

Printer Settings

Purpose:

To print a list of the current user default values, the installed options, the amount of installed print memory, and the status of printer supplies.

Panel Settings

Purpose:

To print a detailed list of all the settings on the operator panel menus.

PCL Fonts List

Purpose:

To print a sample of the available PCL fonts.

PCL Macros List

Purpose:

To print the information on the downloaded PCL macro.

PS Fonts List

Purpose:

To print a sample of the available PS fonts.

PDF Fonts List

Purpose:

To print a sample of the available PDF fonts.

Job History

Purpose:

To print a detailed list of the print jobs that have been processed. This list contains the last 20 jobs.

Error History

Purpose:

To print a detailed list of paper jams and fatal errors.

Print Meter

Purpose:

To print the reports for the total number of pages printed.

Demo Page

Purpose:

To print a test page.

Stored Documents

NOTE:

- Stored Documents feature is available only when the optional 512MB memory is installed on the printer and `RAM Disk` under `System Settings` is enabled.

Purpose:

To print a list of all files stored for `Secure Print` and `Sample Print` in the RAM disk.

■ Meter Readings

Purpose:

To check the total number of printed pages.

Values:

Meter 1[*1]	Displays the total number of color prints.
Meter 2	Displays the total number of monochrome prints.
Meter 3[*1]	Displays the total number of large size color prints.
Meter 4	Displays the total number of color and monochrome prints (Meter 1 + Meter 2).

[*1] This item always shows `0` on your printer.

■ Admin Menu

Use the `Admin Menu` menu to configure a variety of printer features.

PCL Settings

Use the `PCL Settings` menu to change printer settings that only affect jobs using the PCL emulation printer language.

NOTE:

- Values marked by an asterisk (*) are the factory default menu settings.

• Paper Tray

Purpose:

To specify the default paper tray.

Values:

Auto[*]
Bypass Tray
Tray1
Tray2[*1]

[*1] `Tray2` is available only when the optional 550 sheet feeder is installed.

• Output Size

Purpose:

To specify the default paper size.

Values:

mm series

A4 - 210x297*[1]			
A5 - 148x210			
B5 - 182x257			
Letter - 8.5x11			
Folio - 8.5x13			
Legal - 8.5x14			
Executive			
Monarch Env.			
DL Env- 110x220			
C5 Env- 162x229			
#10Env- 4.1x9.5			
New Custom Size	**Portrait(Y)**	**297 mm***	Specifies the length of the custom size paper.
		127 - 355 mm	
	Landscape(X)	**210 mm***	Specifies the width of the custom size paper.
		77 - 215 mm	

*[1] The default for `Output Size` varies depending on region-specific factory.

inch series

Letter - 8.5x11			
Folio - 8.5x13			
Legal - 8.5x14			
Executive			
A4 - 210x297*[1]			
A5 - 148x210			
B5 - 182x257			
Monarch Env.			
DL Env- 110x220			
C5 Env- 162x229			
#10Env- 4.1x9.5			
New Custom Size	**Portrait(Y)**	**11.7"***	Specifies the length of the custom size paper.
		5.0-14.0"	
	Landscape(X)	**8.3"***	Specifies the width of the custom size paper.
		3.0-8.5"	

*[1] The default for `Output Size` varies depending on region-specific factory.

NOTE:

- Selecting `New Custom Size` for the paper size prompts you to enter a custom length and width.

• Orientation

Purpose:

To specify how text and graphics are oriented on the page.

Values:

Portrait*	Prints text and graphics parallel to the short edge of the paper.
Landscape	Prints text and graphics parallel to the long edge of the paper.

• 2-Sided

Purpose:

To specify whether to print on both sides of a sheet of paper.

Values:

2-Sided Print	**Off***	Does not print on both sides of a sheet of paper.
	On	Prints on both sides of a sheet of paper.
Binding Edge	**Long Edge Flip***	Prints on both sides of a sheet of paper to be bound by long edge.
	Short Edge Flip	Prints on both sides of a sheet of paper to be bound by short edge.

• Font

Purpose:

To specify the default font from the fonts registered in the printer.

Values:

CG Times	**LetterGothic**	**CourierPS**
CG Times It	**LetterGothic It**	**CourierPS Ob**
CG Times Bd	**LetterGothic Bd**	**CourierPS Bd**
CG Times BdIt	**Albertus Md**	**CourierPS BdOb**
Univers Md	**Albertus XBd**	**SymbolPS**
Univers MdIt	**Clarendon Cd**	**Palatino Roman**
Univers Bd	**Coronet**	**Palatino It**
Univers BdIt	**Marigold**	**Palatino Bd**
Univers MdCd	**Arial**	**Palatino BdIt**
Univers MdCdIt	**Arial It**	**ITCBookman Lt**
Univers BdCd	**Arial Bd**	**ITCBookman LtIt**
Univers BdCdIt	**Arial BdIt**	**ITCBookmanDm**
AntiqueOlv	**Times New**	**ITCBookmanDm It**
AntiqueOlv It	**Times New It**	**HelveticaNr**
AntiqueOlv Bd	**Times New Bd**	**HelveticaNr Ob**
CG Omega	**Times New BdIt**	**HelveticaNr Bd**
CG Omega It	**Symbol**	**HelveticaNrBdOb**
CG Omega Bd	**Wingdings**	**N C Schbk Roman**
CG Omega BdIt	**Line Printer**	**N C Schbk It**
GaramondAntiqua	**Times Roman**	**N C Schbk Bd**
Garamond Krsv	**Times It**	**N C Schbk BdIt**
Garamond Hlb	**Times Bd**	**ITC A G Go Bk**
GaramondKrsvHlb	**Times BdIt**	**ITC A G Go BkOb**
Courier*	**Helvetica**	**ITC A G Go Dm**
Courier It	**Helvetica Ob**	**ITC A G Go DmOb**

Courier Bd	Helvetica Bd	ZapfC MdIt
Courier BdIt	Helvetica BdOb	ZapfDingbats

• Symbol Set

Purpose:

To specify a symbol set for a specified font.

Values:

ROMAN-8*	WIN L1	ISO-6
ISO L1	WIN L2	ISO-11
ISO L2	WIN L5	ISO-15
ISO L5	DESKTOP	ISO-17
ISO L6	PS TEXT	ISO-21
PC-8	MC TEXT	ISO-60
PC-8 DN	MS PUB	ISO-69
PC-775	MATH-8	WIN 3.0
PC-850	PS MATH	WINBALT
PC-852	PI FONT	SYMBOL
PC-1004	LEGAL	WINGDINGS
PC-8 TK	ISO-4	DNGBTSMS

• Font Size

Purpose:

To specify the font size for scalable typographic fonts, within the range of 4.00 to 50.00. The default is 12.00.

Font size refers to the height of the characters in the font. One point equals approximately 1/72 of an inch.

NOTE:

- The `Font Size` menu is only displayed for typographic fonts.

• Font Pitch

Purpose:

To specify the font pitch for scalable mono spaced fonts, within the range of 6.00 to 24.00. The default is 10.00.

Font pitch refers to the number of fixed-space characters in a horizontal inch of type. For nonscheduled mono spaced fonts, the pitch is displayed, but cannot be changed.

NOTE:

- The `Font Pitch` menu is only displayed for fixed or mono spaced fonts.

• Form Line

Purpose:

To set the number of lines in a page.

Values:

64*1	Sets the value in increments of 1.
5–128	

*1 Denotes region-specific factory default values.

The printer sets the amount of space between each line (vertical line spacing) based on the `Form Line` and `Orientation` menu items. Select the correct `Form Line` and `Orientation` before changing `Form Line`.

See also:

- "Orientation" on page 109

• Quantity

Purpose:

To set the default print quantity, within the range of 1 to 999. The default is 1. (Set the number of copies required for a specific job from the print driver. Values selected from the print driver always override values selected from the operator panel.)

• Hex Dump

Purpose:

To help isolate the source of a print job problem. With `Hex Dump` selected, all data sent to the printer is printed in hexadecimal and character representation. Control codes are not executed.

Values:

Disable*	Disables the Hex Dump feature.
Enable	Enables the Hex Dump feature.

• Draft Mode

Purpose:

To save toner by printing in the draft mode. The print quality is reduced when you print in the draft mode.

Values:

Disable*	Does not print in the draft mode.
Enable	Prints in the draft mode.

• LineTermination

Purpose:

To add the line termination commands.

Values:

Off*	The line termination command is not added. CR=CR, LF=LF, FF=FF
Add-LF	The LF command is added. CR=CR-LF, LF=LF, FF=FF
Add-CR	The CR command is added. CR=CR, LF=CR-LF, FF=CR-FF
CR-XX	The CR and LF commands are added. CR=CR-LF, LF=CR-LF, FF=CR-FF

• Ignore FormFeed

Purpose:

To specify whether to ignore blank pages that only contain Form Feed control codes.

Values:

Off*	Disables the Ignore FormFeed feature.
On	Enables the Ignore FormFeed feature.

• A4 Wide

Purpose:

To expand the printable area width 8 inch.

Values:

Off*	Disables A4 Wide.
On	Enables A4 Wide.

PDF Settings

Use the `PDF Settings` menu to change printer settings that only affect the PDF jobs.

NOTE:

- Values marked by an asterisk (*) are the factory default menu settings.

• Quantity

Purpose:

To specify the number of copies to print.

Values:

1sets*	Sets the value in increments of 1.
1–999sets	

• 2-Sided Print

Purpose:

To specify whether to print on both sides of a sheet of paper.

Values:

1-Sided*	Prints on one side of a sheet of paper.
Long Edge Flip	Prints on both sides of a sheet of paper to be bound by long edge.
Short Edge Flip	Prints on both sides of a sheet of paper to be bound by short edge.

• Print Mode

Purpose:

To specify the print mode.

Value:

Normal*	For documents with normal sized characters.
High Quality	For documents with small characters or thin lines, or documents printed using a dot-matrix printer.
High Speed	Prints with the higher speed than the Normal mode, but the quality is less.

• Password

Purpose:

To specify the password to print the secure PDF.

Value:

Password	Enter the password to print the secure PDF.

• Collated

Purpose:

To specify whether to sort the job.

Values:

Off*	Does not sort the job.
On	Sorts the job.

• Output Size

Purpose:

To specify the output paper size for PDF.

Values:

A4 - 210x297*1
Letter - 8.5x11*1
Auto

*1 The default paper size is displayed.

• Layout

Purpose:

To specify the output layout.

Values:

Auto %*
100% (No Zoom)
Booklet
2 Pages Up
4 Pages Up

PS Settings

Use the `PS Settings` menu to change printer settings that only affect jobs using the PostScript® emulation printer language.

NOTE:

- Values marked by an asterisk (*) are the factory default menu settings.

• PS Error Report

Purpose:

To specify whether to print the contents of PostScript® errors. The change becomes effective after the printer is turned off and then on again.

Values:

Off	Discards the print job without printing an error message.
On*	Prints an error message before it discards the job.

NOTE:

- Instructions from the PS driver override the settings specified on the operator panel.

• PS Job Time-out

Purpose:

To specify the runtime of one PostScript® job. The change becomes effective after the printer is turned off and then on again.

Values:

Off*		Job time-out does not occur.
On	**1min**	A PostScript® error occurs if processing is not completed after the specified time.
	1-900min	

• PaperSelect Mode

Purpose:

To set the way to select the paper tray for PostScript® mode. The change becomes effective after the printer is turned off and then on again.

Values:

Auto*	The tray is selected as the same setting as in the PCL mode.
Select FromTray	The tray is selected in a method compatible with regular PostScript® printers.

Network Setup

Use the `Network Setup` menu to change the printer settings affecting jobs sent to the printer through the network.

NOTE:

- Values marked by an asterisk (*) are the factory default menu settings.

• Ethernet

NOTE:

- Ethernet feature is available only when the printer is connected using the wired network.

Purpose:

To specify the communication speed and the duplex settings of Ethernet. The change becomes effective after the printer is turned off and then on again.

Values:

Auto*	Detects the Ethernet settings automatically.
10BASE-T Half	Uses 10BASE-T Half-duplex.
10BASE-T Full	Uses 10BASE-T Full-duplex.
100BASE-TX Half	Uses 100BASE-TX Half-duplex.
100BASE-TX Full	Uses 100BASE-TX Full-duplex.
1000BASE-T Full	Uses 1000BASE-T Full-duplex.

• Wireless Status

NOTE:

- Wireless Status feature is available only when the printer is connected using the wireless network.

Purpose:

To confirm the wireless communication status.

Values:

Connection	Displays the connection condition.
Encryption Type	Displays the encryption type.

• Wireless Setup

NOTE:

- Wireless Setup feature is available only when the printer is connected using the wireless network.

Purpose:

To configure the wireless network interface. The printer automatically searches and list available access points. Select one of the access points, and enter a pass phrase or WEP Key to complete the wireless setup. You can also specify and configure the wireless network manually.

Values:

Select access		Select the desired access point from the list, or select `Manual Setup` to specify and configure wireless network manually.
	PassPhraseEntry	Displayed when the selected access point uses the security method of WPA-PSK-TKIP or WPA2-PSK-AES. Specify the pass phrase of 8 to 63 alphanumeric characters.
	WEP Key	Displayed when the selected access point uses the security method of WEP. Specify the WEP key of 10 or 26 hexadecimal characters. The transmit key is set to `Auto`.

Manual Setup	**Enter (SSID)**					Specify a name to identify the wireless network. Up to 32 alphanumeric characters can be entered.
	Network Mode	**Infrastructure**				Select to configure the wireless setting through the access point such as a wireless router.
			Encryption Type	**No Security**		Specify `No Security` to configure the wireless setting without specifying a security method from Mixed mode PSK, WPA-PSK-TKIP, WPA2-PSK-AES, and WEP.
				Mixed mode PSK		Specify `Mixed mode PSK` to automatically select an available encryption method from WPA-PSK-TKIP or WPA2-PSK-AES.
					PassPhraseEntry	Specify the pass phrase for Mixed mode PSK. Enter 8 to 63 alphanumeric characters.
				WPA-PSK-TKIP		Select to configure the wireless setting with the security method of WPA-PSK-TKIP.
					PassPhraseEntry	Specify the pass phrase for WPA-PSK-TKIP. Enter 8 to 63 alphanumeric characters.
				WPA2-PSK-AES		Select to configure the wireless setting with the security method of WPA2-PSK-AES.
					PassPhraseEntry	Specify the pass phrase for WPA2-PSK-AES. Enter 8 to 63 alphanumeric characters.
				WEP		Select to configure the wireless setting with the security method of WEP.
					WEP Key	Specify the WEP Key to use through the wireless network. Enter 10 or 26 hexadecimal characters.
					Transmit Key	Specify the transmit key from `Auto`, `WEP Key1`, `WEP Key2`, `WEP Key3`, and `WEP Key4`.
		Ad-hoc				Select to configure the wireless setting without the access point such as a wireless router.
			Encryption Type	**No Security**		Specify `No Security` to configure the wireless setting without specifying a security method of WEP.
				WEP		Select to configure the wireless setting with the security method of WEP.
					WEP Key	Specify the WEP Key to use through the wireless network. Enter 10 or 26 hexadecimal characters.
					Transmit Key	Specify the transmit key from `WEP Key1`, `WEP Key2`, `WEP Key3`, and `WEP Key4`.

• WPS Setup

NOTE:

- WPS Setup feature is available only when the printer is connected using the wireless network.

Purpose:

To configure the wireless setting with the security method of WPS.

Values:

Push Btn. Ctrl	**Cancel**	Cancels the wireless setting with the security method of WPS-PBC.
	Start	Starts the wireless setting with the security method of WPS-PBC.
PIN Code	**Start Config.**	Configures the wireless setting using the PIN code assigned automatically by the printer.
	Print PIN Code	Prints the PIN code. Confirm it when entering PIN assigned to the printer into your computer.

• Reset Wireless

NOTE:

- Reset Wireless feature is available only when the printer is connected using the wireless network.

Purpose:

To initialize wireless network settings. After executing this function and rebooting the printer, all wireless network settings are reset to their default values.

• TCP/IP

Purpose:

To configure TCP/IP settings.

Values:

IP Mode	**Dual Stack***	Uses both IPv4 and IPv6 to set the IP address.
	IPv4	Uses IPv4 to set the IP address.
	IPv6	Uses IPv6 to set the IP address.

IPv4	**Get IP Address**	**DHCP / Autonet***	Sets the IP address automatically. A random value in the range of `169.254.1.0` to `169.254.254.255` that is not currently in use on the network is set as the IP address. The subnet mask is set as `255.255.0.0`.
		BOOTP	Sets the IP address using BOOTP.
		RARP	Sets the IP address using RARP.
		DHCP	Sets the IP address using DHCP.
		Panel	Use this option when you want to set the IP address manually on the operator panel.
	IP Address		When an IP address is being set manually, the IP is allocated to the printer using the format `nnn.nnn.nnn.nnn`. Each octet that makes up `nnn.nnn.nnn.nnn` is a value in the range of `0` to `254. 127` and any value in the range of `224` to `254` cannot be specified for the first octet of a gateway address.
	Subnet Mask		When an IP address is being set manually, the subnet mask is specified using the format `nnn.nnn.nnn.nnn`. Each octet that makes up `nnn.nnn.nnn.nnn` is a value in the range of `0` to `255. 255.255.255.255` cannot be specified as the subnet mask.
	Gateway Address		When an IP address is being set manually, the gateway address is specified using the format `nnn.nnn.nnn.nnn`. Each octet that makes up `nnn.nnn.nnn.nnn` is a value in the range of `0` to `254. 127` and any value in the range of `224` to `254` cannot be specified for the first octet of a gateway address.
IPsec*1	**Disable**		Disables IPsec.

*1 IPsec feature is available only when IPsec is enabled on the CentreWare Internet Services.

• Protocol

Purpose:

To enable or disable each protocol. The change becomes effective after the printer is turned off and then on again.

Values:

LPD	**Disable**	Disables the Line Printer Daemon (LPD) port.
	Enable*	Enables the LPD port.
Port9100	**Disable**	Disables the Port9100 port.
	Enable*	Enables the Port9100 port.
FTP	**Disable**	Disables the FTP port.
	Enable*	Enables the FTP port.
IPP	**Disable**	Disables IPP port.
	Enable*	Enables IPP port.
SMB (TCP/IP)	**Disable**	Disables SMB TCP/IP port.
	Enable*	Enables SMB TCP/IP port.
SMB (NetBEUI)	**Disable**	Disables SMB Net BEUI port.
	Enable*	Enables SMB Net BEUI port.
WSD	**Disable**	Disables WSD port.
	Enable*	Enables WSD port.
SNMP (UDP/IP)	**Disable**	Disables the Simple Network Management Protocol (SNMP) UDP port.
	Enable*	Enables the SNMP UDP port.
StatusMessenger	**Disable**	Disables the Status Messenger feature.
	Enable*	Enables the Status Messenger feature.
InternetServices	**Disable**	Disables an access to CentreWare Internet Services embedded in the printer.
	Enable*	Enables an access to CentreWare Internet Services embedded in the printer.

Bonjour(mDNS)	**Disable**	Disables Bonjour® (mDNS).
	Enable*	Enables Bonjour (mDNS).
Telnet	**Disable***	Disables Telnet.
	Enable	Enables Telnet.
HTTP-SSL/TLS*1	**Disable**	Disables HTTP-SSL/TLS.
	Enable	Enables HTTP-SSL/TLS.

*1 `HTTP-SSL/TLS` is available only when a certificate is created using CentreWare Internet Services. For details about creating a certificate, see the Help on the CentreWare Internet Services.

• IP Filter

NOTE:

- IP Filter feature is available only when `LPD` or `Port9100` under `Protocol` is set to `Enable`.

Purpose:

To block data received from certain IP addresses through the wired network. You can set up to five IP addresses. The change becomes effective after the printer is turned off and then on again.

Values:

No. n / Address (n is 1–5.)		Sets the IP address for Filter *n*.
No. n / Mask (n is 1–5.)		Sets the address mask for Filter *n*.
No. n / Mode (n is 1–5.)	**Off***	Disables the IP Filter feature for Filter *n*.
	Accept	Accepts an access from the specified IP address.
	Reject	Rejects an access from the specified IP address.

• IEEE 802.1x

NOTE:

- IEEE 802.1x feature is available only when the printer is connected using LAN cable and the IEEE 802.1x authentication is enabled using CentreWare Internet Services. For details about setting IEEE 802.1x, see the Help on the CentreWare Internet Services.

Purpose:

To disable IEEE 802.1x authentication. The change becomes effective after the printer is turned off and then on again.

Value:

Disable	Disables IEEE 802.1x.

• Initialize NVM

Purpose:

To initialize wired network data stored in non-volatile memory (NVM). After executing this function and rebooting the printer, all wired network settings are reset to their default values.

• Adobe Protocol

Purpose:

To specify PostScript® communication protocol for a parallel interface, you can configure the Adobe Protocol settings for the wired network. The change becomes effective after the printer is turned off and then on again.

Values:

Auto*	Sets the PostScript® communications protocol automatically.
Standard	Sets the PostScript® communications protocol to `Standard`.
BCP	Sets the PostScript® communications protocol to `BCP`.
TBCP	Sets the PostScript® communications protocol to `TBCP`.
Binary	Sets the PostScript® communications protocol to `Binary`.

USB Settings

Use the `USB Settings` menu to change printer settings affecting a USB port.

NOTE:

- Values marked by an asterisk (*) are the factory default menu settings.

• Port Status

NOTE:

- Port Status feature is available only for the USB port on the rear of the printer.

Purpose:

To specify whether to enable the USB port. The change becomes effective after the printer is turned off and then on again.

Values:

Disable	Disables the USB port.
Enable*	Enables the USB port.

• Adobe Protocol

Purpose:

To specify PostScript® communication protocol. You can configure the `Adobe Protocol` settings for the wired network. The change becomes effective after the printer is turned off and then on again.

Values:

Auto	Sets the PostScript® communications protocol automatically.
Standard	Sets the PostScript® communications protocol to `Standard`.
BCP	Sets the PostScript® communications protocol to `BCP`.
TBCP*	Sets the PostScript® communications protocol to `TBCP`.
Binary	Sets the PostScript® communications protocol to `Binary`.

System Settings

Use `System Settings` to configure a variety of printer features.

NOTE:

- Values marked by an asterisk (*) are the factory default menu settings.

• Power Saver Time

Purpose:

To specify the time for transition to Power Saver mode.

Values:

Low Power Timer	**1min***	Specifies the time taken by the printer to enter Low Power mode after it finishes a job.
	1–60 min	
Sleep Timer	**1min***	Specifies the time taken by the printer to enter Sleep mode after it has entered Low Power mode.
	1–60 min	

Select `1min` (default) for `Low Power Timer` if your printer shares an electrical circuit with your room lights and you notice them flickering. Otherwise, select a high value to keep your printer available for frequent use with the minimum warm-up time.

The printer automatically returns to the standby mode from the Power Saver mode when it receives data from the computer. You can also change the status of the printer to the standby mode by pressing the (**Energy Saver**) button on the operator panel.

• Auto Reset

Purpose:

To automatically reset the settings to the default settings and return to the standby mode after you do not specify any settings for the specified time.

Values:

45sec*
1min
2min
3min
4min

• Fault Time-out

Purpose:

To specify the amount of time the printer waits before canceling a job that stops abnormally. The print job is cancelled if the time-out time is exceeded.

Values:

Off		Disables the fault time-out.
On*	**60sec***	Sets the amount of time the printer waits before canceling a job that stops abnormally.
	3–300 sec	

• Job Time-out

Purpose:

To specify the amount of time the printer waits for data to arrive from the computer. The print job is cancelled if the time-out time is exceeded.

Values:

Off		Disables the job time-out.
On*	**30sec***	Sets the time the printer waits for data to arrive from the computer.
	5–300 sec	

• Clock Settings

Purpose:

To specify the date and time formats.

Values:

Set Date & Time	**Time Zone**	Sets the time zone.
	Set Date	Sets the date depending on the `Date Format` settings.
	Set Time	Sets the time.
Date Format	**yy/mm/dd**	Sets the date format.
	mm/dd/yy	
	dd/mm/yy*1	
Time Format	**12H**	Sets the time in 12-hour format.
	24H*	Sets the time in 24-hour format.

*1 The default for `Date Format` varies depending on region-specific factory default.

• Audio Tones

Purpose:

To configure settings for tones emitted by the printer during operation or when a warning message appears.

Values:

Control Panel	**Off***	Does not emit a tone when the operator panel input is correct.
	On	Emits a tone when the operator panel input is correct.
Invalid Key	**Off***	Does not emit a tone when the operator panel input is incorrect.
	On	Emits a tone when the operator panel input is incorrect.
Machine Ready	**Off**	Does not emit a tone when the printer is ready to process a job.
	On*	Emits a tone when the printer is ready to process a job.
Job Completed	**Off**	Does not emit a tone when a job is complete.
	On*	Emits a tone when a job is complete.
Fault Tone	**Off**	Does not emit a tone when a job ends abnormally.
	On*	Emits a tone when a job ends abnormally.
Alert Tone	**Off**	Does not emit a tone when a problem occurs.
	On*	Emits a tone when a problem occurs.
Out of Paper	**Off**	Does not emit a tone when the printer runs out of paper.
	On*	Emits a tone when the printer runs out of paper.
Low Toner Alert	**Off**	Does not emit a tone when a toner is low.
	On*	Emits a tone when a toner is low.
AutoClear Alert	**Off***	Does not emit a tone 5 seconds before the printer performs auto clear.
	On	Emits a tone 5 seconds before the printer performs auto clear.
All Tones	**Off**	Disables all the alert tones.
	On	Sets the volume of all the alert tones at once.

• mm / inch

Purpose:

To specify the default measurement unit displayed after the numeric value on the operator panel.

Values:

Millimeters(mm)*	Selects millimeter as the default measurement unit.
Inches(")	Selects inch as the default measurement unit.

NOTE:

- The default for `mm/inch` varies depending on other settings, such as `Region` and `Document Size`.

• DefaultPaperSize

Purpose:

To specify the default paper size.

Values:

A4 - 210x297
Letter - 8.5x11

NOTE:

- The default for `DefaultPaperSize` varies depending on region-specific factory default.

• Auto Job History

Purpose:

To automatically print a job history report after every 20 jobs.

Values:

Off*	Does not automatically print a job history report.
On	Automatically prints a job history report.

The job history report can also be printed using the `Report / List` menu.

• 2-Sided Report

Purpose:

To specify whether to print on both sides.

Values:

1-Sided*	Prints on one side of a sheet of paper.
2-Sided	Prints on both sides of a sheet of paper.

• Print ID

Purpose:

To specify a location where the user ID is printed.

Values:

Off*	Does not print the user ID.
Top Left	Prints the user ID on the top left of the page.
Top Right	Prints the user ID on the top right of the page.
Bottom Left	Prints the user ID on the bottom left of the page.
Bottom Right	Prints the user ID on the bottom right of the page.

NOTE:

- When you print on DL size paper, a part of the user ID may not be printed correctly.

• Print Text

Purpose:

To specify whether the printer outputs PDL data, which is not supported by the printer, as text when the printer receives it. Text data is printed on A4 or Letter size paper.

Values:

Off	Does not print the received data.
On*	Prints the received data as text data.

• Banner Sheet

NOTE:

- Banner Sheet feature is available only when the optional 550 sheet feeder is installed on the printer.

Purpose:

To specify the position of banner sheet, and also specify the tray in which the banner sheet is loaded.

Values:

Insert Position	**Off***	Does not print the banner sheet.
	Start Sheet	Inserted before the first page of every job.
	End Sheet	Inserted after the last page of every job.
	Start&End Sheet	Inserted before the first page of every job and after the last page of every job.
Select Tray	**Bypass Tray**	The banner sheet is loaded in the bypass tray.
	Tray1*	The banner sheet is loaded in the standard 250 sheet tray.
	Tray2*1	The banner sheet is loaded in the optional 550 sheet feeder.

*1 `Tray2` is available only when the optional 550 sheet feeder is installed.

• RAM Disk

NOTE:

- RAM Disk feature is available only when the optional 512MB memory is installed on the printer.

Purpose:

To allocate memory to the RAM disk file system for the Secure Print and Sample Print features. The change becomes effective after the printer is turned off and then on again.

Values:

Disable		Does not allocate memory to the RAM disk file system. Secure Print and Sample Print jobs will abort and be recorded to the job log.
Enable*	**200MB***	Sets the allocation of memory to the RAM disk file system in increments of 50 MB.
	50-350MB	

NOTE:

- Restart your printer when you change the settings for the `RAM Disk` menu.

• Substitute Tray

Purpose:

Specifies whether to use paper of a different size when the paper that is loaded in the specified tray does not match the paper size settings for the current job.

Values:

Off*	No tray size substitute accepted.
Larger Size	Substitutes paper of next largest size. When there is no larger paper size, the printer substitutes paper of nearest size.
Closest Size	Substitutes paper of nearest size.
Bypass Feed	Substitutes paper from the bypass tray.

• Auditron Mode

Purpose:

To specify whether to limit the functions that can be used per user by Auditron authentication.

Values:

Off*	Does not limit functions by Auditron authentication.
On	Limits functions by Auditron authentication.

• No Acct User Prt

Purpose:

To specify whether to permit the printing of data without authentication information.

Values:

Off*	Does not permit non-account user to print the data.
On	Permits non-account user to print the data.

• LetterH Dup Mode

Purpose:

To specify whether to print on both sides when you use letterhead.

Values:

Disable*	Does not print on both sides of letterhead.
Enable	Prints on both sides of letterhead.

• Low Toner Msg

Purpose:

To specify whether to show the alert message when the toner is low.

Values:

Off	Does not show the alert message when the toner is low.
On*	Shows the alert message when the toner is low.

• FW Download Mode

Purpose:

To specify whether to update the printer by downloading firmware.

Values:

Disable	Disables updating the printer.
Enable*	Enables updating the printer.

Maintenance Mode

Use the `Maintenance Mode` menu to initialize the NV (non-volatile) memory, configure the plain paper quality adjustment settings, and configure the security settings.

NOTE:

- Values marked by an asterisk (*) are the factory default menu settings.

• F/W Version

Purpose:

To confirm the current F/W version.

• Adjust PaperType

Purpose:

To specify paper density settings.

Values:

Plain	**Lightweight**
	Heavyweight*

• Adjust TransUnit

Purpose:

To specify the transfer unit voltage adjustment for each paper type.

The default settings may not give the best output on all paper types. If you see mottles on the print output, try to increase the voltage. If you see white spots on the print output, try to decrease the voltage.

NOTE:

- The print quality changes depending on the setting values you select for this item.

Values:

Plain	**0***
	-5 to +10
Plain Thick	**0***
	-5 to +10
Light Card	**0***
	-5 to +10
Heavy Card	**0***
	-5 to +10
Envelope	**0***
	-5 to +10
Labels	**0***
	-5 to +10

• AdjustFusingUnit

Purpose:

To adjust the fusing temperature setting for each paper type.

The default settings may not give the best output on all paper types. When the printed paper has curled, try to lower the temperature. When the toner does not fuse on the paper properly, try to increase the temperature.

NOTE:

- The print quality changes depending on the setting values you select for this item.

Values:

Plain	**0***
	-3 to +3
Plain Thick	**0***
	-3 to +3
Light Card	**0***
	-3 to +3
Heavy Card	**0***
	-3 to +3
Envelope	**0***
	-3 to +3
Labels	**0***
	-3 to +3

• Adjust Density

Purpose:

To adjust density level.

Values:

0*
-3 to +3

• Chart

Purpose:

To print various charts that can be used for diagnosis of the printer.

Values:

Pitch Chart		Prints a full halftone page. Also prints a page to check the pitch. A total of two pages are printed.
Full Page Solid	**1-Sided**	Prints a chart of the full page solid on the paper.
	2-Sided	Prints a chart of the full page solid on both sides of the paper.
Alignment Chart		Prints a chart to check for proper alignment of the print image on the paper.

• Clean Developer

Purpose:

To stir the developer in a drum cartridge.

• Clean TransUnit

Purpose:

To clean the transfer unit.

• Toner Refresh

Purpose:

To clean the toner in a drum cartridge (and supply new toner from toner cartridge).

NOTE:

- Toner Refresh feature uses the toner, and shorten the life of the toner cartridge and the drum cartridge.

• Initialize NVM

Purpose:

To initialize the non-volatile (NV) memory. After executing this function and rebooting the printer, all the menu parameters, except the parameters for the network, are reset to their default values.

See also:

- "Resetting to Factory Defaults" on page 138

• Init Print Meter

Purpose:

To initialize the print meter of the printer. When the print meter is initialized, the meter count is reset to zero.

• Reset TransUnit

Purpose:

To initialize the transfer unit counter.

• Reset FusingUnit

Purpose:

To initialize the life counter of the fusing unit. After replacing the fusing unit, be sure to initialize its life counter.

• Clear JobHistory

Purpose:

To clear the job history of all finished jobs.

• Clear Storage

NOTE:

- Clear Storage feature is available only when the optional 512MB memory is installed.

Purpose:

To clear all files stored as Secure Print and Sample Print in the RAM disk.

Values:

All Clear	Deletes all files stored as Secure Print and Sample Print in the RAM disk.
Secure Document	Deletes all files stored as Secure Print in the RAM disk.
Stored Document	Deletes all files stored as Sample Print in the RAM disk.

• Non-Genuine

Purpose:

To use toner cartridge of another manufacturer.

NOTE:

- Using a non-Fuji Xerox toner cartridge may severely damage your printer. The warranty does not cover damages caused by using non-Fuji Xerox toner cartridge.

Values:

Toner	**Off***	Does not use toner cartridge of another manufacturer.
	On	Uses toner cartridge of another manufacturer.

• Adjust Altitude

Purpose:

To specify the altitude of the location where the printer is installed.

The discharge phenomenon for charging the photo conductor varies with barometric pressure. Adjustments are performed by specifying the altitude of the location where the printer is being used.

NOTE:

- An incorrect altitude adjustment setting leads to problems such as poor printing quality and incorrect indication of remaining toner.

Values:

0m*	Sets the altitude of the location where the printer is installed.
1000m	
2000m	
3000m	

• StaticMemory Ctr

Purpose:

To widen the print gap not to leave toner streak on the next page.

NOTE:

- StaticMemory Ctr feature shortens the life of the drum cartridge.

Values:

Off*	Does not widen the print gap.
On	Widens the print gap.

• Ghost Control

Purpose:

To reduce negative ghost.

Values:

Off*	Does not reduce negative ghost.
On	Reduces negative ghost.

Secure Settings

Use the `Secure Settings` menu to set a password to limit access to the menus. This prevents items from being changed accidentally.

NOTE:

- Values marked by an asterisk (*) are the factory default menu settings.

• Panel Lock

Purpose:

To set a limited access to `Admin Menu` with a password, and to set or change the password.

See also:

- "Panel Lock Function" on page 136

Values:

Panel Lock Set	**Disable***	Disables password protection for `Admin Menu`.
	Enable	Enables password protection for `Admin Menu`.
Change Password*1	**0000–9999**	Sets or changes the password required to access `Admin Menu`.

*1 This item is available only when `Panel Lock Set` is set to `Enable`.

• Login Error

NOTE:

- Login Error feature is available only when `Panel Lock Set` is set to `Enable`.

Purpose:

To specify the number of error entry attempts allowed when you log in as an administrator in the `Admin Menu` and `Report / List` menu.

Values:

Off*		Does not allow an administrator to log in after one error entry attempt.
On	**5 times***	Sets the number of error entry attempts allowed when an administrator logs in.
	1-10	

■ Tray Settings

Use the `Tray Settings` menu to define the print media loaded in the bypass tray, the standard 250 sheet tray and the optional 550 sheet feeder.

NOTE:

- Values marked by an asterisk (*) are the factory default menu settings.

Bypass Tray

Purpose:

To specify the paper loaded in the bypass tray.

Values:

Paper Size	**Driver Size***			
mm series	**A4 - 210x297**			
	A5 - 148x210			
	B5 - 182x257			
	Letter - 8.5x11			
	Folio - 8.5x13			
	Legal - 8.5x14			
	Executive			
	Monarch Env.			
	DL Env- 110x220			
	C5 Env- 162x229			
	#10Env- 4.1x9.5			
	New Custom Size	**Portrait(Y)**	**297 mm***	Specifies the length of the custom size paper.
			127 - 355 mm	
		Landscape(X)	**210 mm***	Specifies the width of the custom size paper.
			77 - 215 mm	
inch series	**Driver Size***			
	Letter - 8.5x11			
	Folio - 8.5x13			
	Legal - 8.5x14			
	Executive			
	A4 - 210x297			
	A5 - 148x210			
	B5 - 182x257			
	Monarch Env.			
	DL Env- 110x220			
	C5 Env- 162x229			
	#10Env- 4.1x9.5			
	New Custom Size	**Portrait(Y)**	**11.7"***	Specifies the length of the custom size paper.
			5.0-14.0"	
		Landscape(X)	**8.3"***	Specifies the width of the custom size paper.
			3.0-8.5"	
Paper Type	**Plain***			
	Plain Thick			
	Light Card			
	Heavy Card			
	Envelope			
	Labels			
	Letterhead			
	Hole Punched			
	Colored			
	Other Type			
MPT mode	**Panel Specified**	Configures the paper size and type on the operator panel.		
	DriverSpecified*	Configures the paper size and type on the print driver.		

Display Screen	**Off**	Does not display a popup menu that prompts to set Paper Type and Paper Size when paper is loaded in the bypass tray.
	On*	Displays a popup menu that prompts to set Paper Type and Paper Size when paper is loaded in the bypass tray.

NOTE:

- When `MPT mode` is set to `DriverSpecified`, `Paper Size`, `Paper Type`, and `Display Screen` are not available.
- For more information on supported paper sizes, see also "Usable Print Media" on page 74.

Tray1

Purpose:

To specify the paper loaded in the standard 250 sheet tray.

Values:

Paper Size	**A4 - 210x297*1**			
mm series	**A5 - 148x210**			
	B5 - 182x257			
	Letter - 8.5x11			
	Folio - 8.5x13			
	Legal - 8.5x14			
	Executive			
	New Custom Size	**Portrait(Y)**	**297 mm***	Specifies the length of the custom size paper.
			210 - 355 mm	
		Landscape(X)	**210 mm***	Specifies the width of the custom size paper.
			140 - 215 mm	
inch series	**Letter - 8.5x11**			
	Folio - 8.5x13			
	Legal - 8.5x14			
	Executive			
	A4 - 210x297*1			
	A5 - 148x210			
	B5 - 182x257			
	New Custom Size	**Portrait (Y)**	**11.7"***	Specifies the length of the custom size paper.
			8.3-14.0"	
		Landscape (X)	**8.3"***	Specifies the width of the custom size paper.
			5.8-8.5"	
Paper Type	**Plain***			
	Plain Thick			
	Light Card			
	Heavy Card			
	Labels			
	Letterhead			
	Hole Punched			
	Colored			
	Other Type			
Display Screen	**Off**	Does not display a popup menu that prompts to set Paper Type and Paper Size when paper is loaded in the standard 250 sheet tray.		
	On*	Displays a popup menu that prompts to set Paper Type and Paper Size when paper is loaded in the standard 250 sheet tray.		

[*1] The default for `Paper Size` varies depending on region-specific factory default.

NOTE:

- For more information on supported paper sizes, see also "Usable Print Media" on page 74.

Tray2

NOTE:

- Tray2 is available only when the optional 550 sheet feeder is installed.

Purpose:

To specify the paper loaded in the optional 550 sheet feeder.

Paper Size	**A4 - 210x297**[*1]			
mm series	**A5 - 148x210**			
	B5 - 182x257			
	Letter - 8.5x11			
	Folio-8.5x13			
	Legal - 8.5x14			
	Executive			
	New Custom Size	**Portrait(Y)**	**297 mm***	Specifies the length of the custom size paper.
			210-355 mm	
		Landscape(X)	**210 mm***	Specifies the width of the custom size paper.
			140-215 mm	
inch series	**Letter - 8.5x11**[*1]			
	Folio - 8.5x13			
	Legal - 8.5x14			
	Executive			
	A4 - 210x297			
	A5 - 148x210			
	B5 - 182x257			
	New Custom Size	**Portrait(Y)**	**11.7"***	Specifies the length of the custom size paper.
			8.3-14.0"	
		Landscape(X)	**8.3"***	Specifies the width of the custom size paper.
			5.5-8.5"	
Paper Type	**Plain***			
	Plain Thick			
	Light Card			
	Heavy Card			
	Labels			
	Letterhead			
	Hole Punched			
	Colored			
	Other Type			
Display Screen	**Off**		Does not display a popup menu that prompts to set Paper Type and Paper Size when paper is loaded in the optional 550 sheet feeder.	
	On*		Displays a popup menu that prompts to set Paper Type and Paper Size when paper is loaded in the optional 550 sheet feeder.	

[*1] The default for `Paper Size` varies depending on region-specific factory default.

NOTE:

- For more information on supported paper sizes, see also "Usable Print Media" on page 74.

Tray Priority

Purpose:

To set the priority order of the paper trays for automatic tray selection. If paper trays loaded with the same paper size and type exists, the paper tray is selected according to this priority order.

Values:

1st Priority	**Bypass Tray***	Sets the bypass tray as the first priority.
	Tray1	Sets the standard 250 sheet tray as the first priority.
	Tray2	Sets the optional 550 sheet feeder as the first priority.
2nd Priority	**Bypass Tray**	Sets the bypass tray as the second priority.
	Tray1*	Sets the standard 250 sheet tray as the second priority.
	Tray2	Sets the optional 550 sheet feeder as the second priority.
3rd Priority	**Bypass Tray**	Sets the bypass tray as the third priority.
	Tray1	Sets the standard 250 sheet tray as the third priority.
	Tray2*	Sets the optional 550 sheet feeder as the third priority.

NOTE:

- `Tray2` and `3rd Priority` are available only when the optional 550 sheet feeder is installed.
- The paper tray selected for `1st Priority` is not displayed in `2nd Priority`, and the paper trays selected for `1st Priority` and `2nd Priority` are not displayed in `3rd Priority`.

Panel Lock Function

This feature prevents unauthorized users from changing settings made by the administrator. However, you can select settings for individual print jobs using the print driver.

This section includes:

- "Enabling the Panel Lock" on page 136
- "Disabling the Panel Lock" on page 136

NOTE:

- Disabling the operator panel menus does not prevent access to the `Secure Print`, `Sample Print` and `Tray Settings` menus.

■ Enabling the Panel Lock

1. Press the (**Menu**) button.
2. Select `Admin Menu`, and then press the OK button.
3. Select `Secure Settings`, and then press the OK button.
4. Select `Panel Lock`, and then press the OK button.
5. Select `Panel Lock Set`, and then press the OK button.
6. Select `Enable`, and then press the OK button.
7. Enter the new password, and then press the OK button.
8. Re-enter the password to confirm the password that you entered, and then press the OK button.

NOTE:

- The factory-default panel password is 0000.
- If you forget your password, turn off the printer. Then, while holding the (**Menu**) button, turn on the printer. Continue to hold the (**Menu**) button until the display indicates to enter the new password. Enter the new password, and then press the OK button. Re-enter the password, and then press the OK button. The display will briefly indicate the password has been initialized.
- If you change the password, perform steps 1 to 2. Enter the current password, and then press the OK button. Perform steps 3 to 4. Select `Change Password`, and then press the OK button. Enter the current password, and then press the OK button. Perform steps 7 and 8. This will change the password.

■ Disabling the Panel Lock

1. Press the (**Menu**) button.
2. Select `Admin Menu`, and then press the OK button.
3. Enter the password, and then press the OK button.
4. Select `Secure Settings`, and then press the OK button.
5. Select `Panel Lock`, and then press the OK button.
6. Select `Panel Lock Set`, and then press the OK button.
7. Select `Disable`, and then press the OK button.
8. Enter the current password, and then press the OK button.

Setting the Power Saver Time Option

You can set the power saver time for the printer. The printer switches to the Power Saver mode after the specified time.

NOTE:

- If the `Panel Lock Set` is set to `Enable`, you need to enter the four digit password to enter the `Admin Menu`.

1. Press the (**Menu**) button.
2. Select `Admin Menu`, and then press the OK button.
3. Select `System Settings`, and then press the OK button.
4. Select `Power Saver Time`, and then press the OK button.
5. Select `Low Power Timer` or `Sleep Timer`, and then press the OK button.
6. Press the ▼ or ▲ button or enter the desired value, and then press the OK button.
   You can select from 1–60 minutes for `Low Power Timer` or 1–60 minutes for `Sleep Timer`.
7. To return to the previous screen, press the (**Back**) button.

Resetting to Factory Defaults

After executing this function and rebooting the printer, all the menu parameters, except the parameters for the network, are reset to their default values.

1. Press the (**Menu**) button.
2. Select `Admin Menu`, and then press the OK button.
3. Select `Maintenance Mode`, and then press the OK button.
4. Select `Initialize NVM`, and then press the OK button.
5. Ensure that `Are You Sure?` appears, and then press the OK button.
   The printer restarts automatically to apply the settings.

7

Troubleshooting

This chapter includes:

- "Clearing Jams" on page 140
- "Basic Printer Problems" on page 158
- "Display Problems" on page 159
- "Printing Problems" on page 160
- "Print Quality Problems" on page 161
- "Noise" on page 175
- "Problems With Installed Optional Accessories" on page 176
- "Other Problems" on page 177
- "Understanding Printer Messages" on page 178
- "Contacting Service" on page 180
- "Getting Help" on page 181
- "Non-Genuine Mode" on page 182

Clearing Jams

This section includes:

- "Avoiding Jams" on page 140
- "Identifying the Location of Paper Jams" on page 141
- "Clearing Paper Jams From the Bypass Tray" on page 142
- "Clearing Paper Jams From the Standard 250 Sheet Tray" on page 144
- "Clearing Paper Jams From the Fusing Unit" on page 146
- "Clearing Paper Jams From the Duplexer" on page 149
- "Clearing Paper Jams From the Regi Roll" on page 150
- "Clearing Paper Jams From the Optional 550 Sheet Feeder" on page 152
- "Jam Problems" on page 153

Careful selection of appropriate print media and proper loading allow you to avoid most jams.

See also:

- "About Print Media" on page 72
- "Supported Print Media" on page 74

NOTE:

- Before buying large quantities of any print media, it is recommended that you try a sample first.

Avoiding Jams

- Use only recommended print media.
- See "Loading Print Media in the Standard 250 Sheet Tray and the Optional 550 Sheet Feeder" on page 78 and "Loading Print Media in the Bypass Tray" on page 80 to load print media properly.
- Do not overload the print media sources. Ensure that the print media stack height does not exceed the maximum height indicated by the load-line in the tray.
- Do not load wrinkled, creased, damp, or curled print media.
- Flex, fan, and straighten print media before you load it. If a jam occurs with print media, try feeding one sheet at a time through the bypass tray.
- Do not use print media that you have cut or trimmed.
- Do not mix print media sizes, weights, or types in the same print media source.
- Ensure that the recommended print side is face up when you load the print media.
- Keep print media stored in an acceptable environment.
- Do not remove the feeding tray during a print job.
- Push the tray in firmly after loading.
- Ensure that all cables that connect to the printer are correctly attached.
- Overtightening the guides may cause jams.
- Wipe the feed roller in the tray or bypass tray with a cloth moistened with water if jams caused by misfeeding paper occur frequently.

  See also:

  - "About Print Media" on page 72
  - "Supported Print Media" on page 74
  - "Print Media Storage Guidelines" on page 73

■ Identifying the Location of Paper Jams

WARNING:

- **If you cannot remove the paper jam by doing the procedures in the manual, do not try to forcibly remove the jam. Doing so may cause injuries. Contact your local Fuji Xerox representative.**

WARNING:

- **Fusing Unit Safety**
  Do not remove the Fusing Unit. If you cannot remove the paper jam by doing the procedures in the manual, do not try to forcibly remove the jam. Doing so may cause injuries. Contact your local Fuji Xerox representative.

CAUTION:

- **Do not attempt to remove a paper deeply jammed inside the product, particularly a paper wrapped around the fusing unit or the heat roller. Otherwise, it may cause injuries or burns. Switch off the product immediately and contact your local Fuji Xerox representative.**

IMPORTANT:

- Do not attempt to clear any jams using tools or instruments. This may permanently damage the printer.

The following illustration shows where paper jams may occur along the print media path.

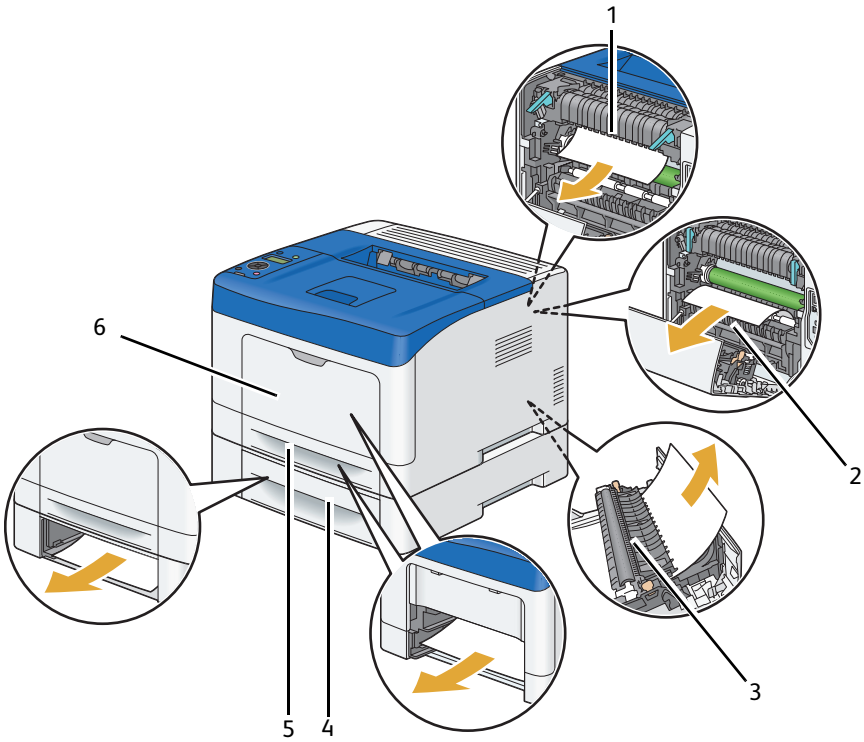

1	Fusing Unit
2	Regi Roll
3	Duplexer
4	Optional 550 Sheet Feeder
5	Standard 250 Sheet Tray
6	Bypass Tray

■ Clearing Paper Jams From the Bypass Tray

IMPORTANT:

- Protect the drum of the drum cartridge against bright light. If the rear door remains open for more than 3 minutes, print quality may deteriorate.

NOTE:

- To resolve the error displayed on the LCD panel, you must clear all print media from the print media path.

1 Remove the remaining documents from the bypass tray.

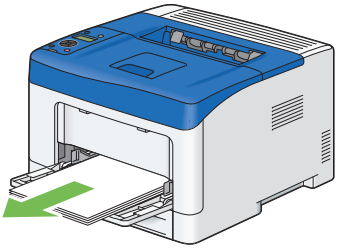

2 Grasp both sides of the bypass tray, and then pull the bypass tray from the printer.

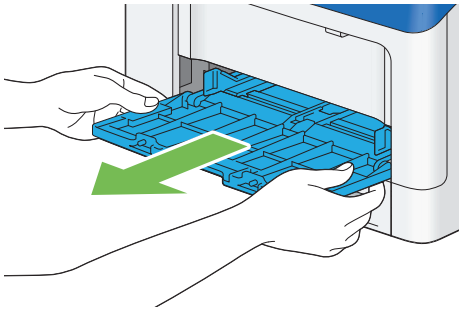

3 Pull the standard 250 sheet tray from the printer about 200 mm.

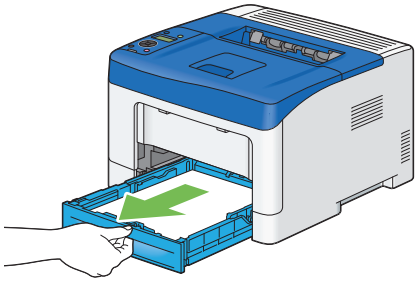

4 Hold the standard 250 sheet tray with both hands, and remove it from the printer.

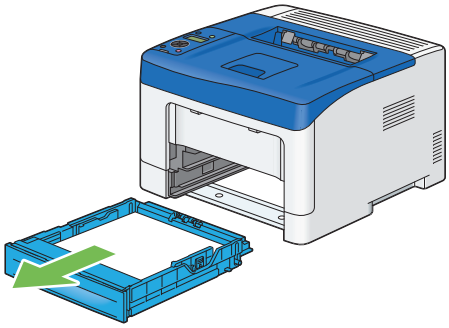

5 Pull the rear door handle to open the rear door.

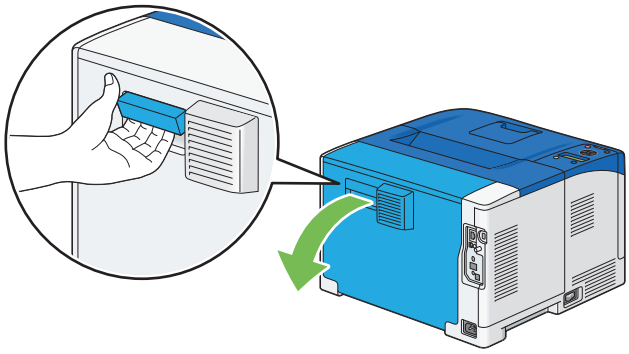

6 Remove the jammed paper.

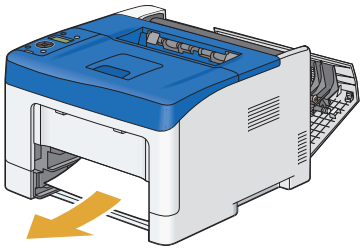

7 Insert the standard 250 sheet tray into the printer, and push until it stops.

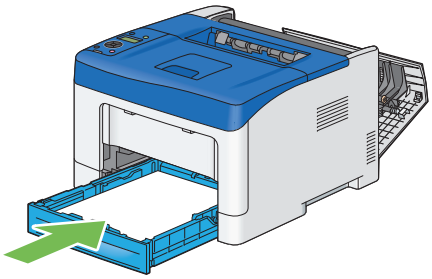

IMPORTANT:

- Do not use excessive force on the tray. Doing so could damage the tray or the inside of the printer.

8 Insert the bypass tray into the printer, push until it stops, and close the cover.

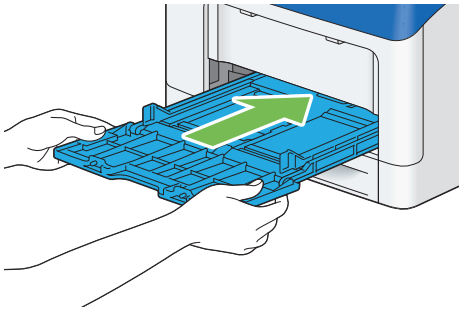

9 Close the rear door, and press the (OK) button.

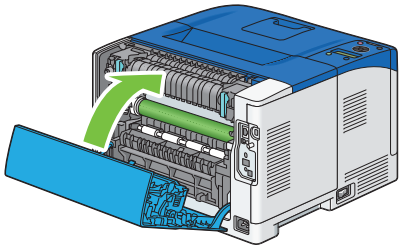

■ Clearing Paper Jams From the Standard 250 Sheet Tray

IMPORTANT:

- Protect the drum of the drum cartridge against bright light. If the rear door remains open for more than 3 minutes, print quality may deteriorate.

NOTE:

- To resolve the error displayed on the LCD panel, you must clear all print media from the print media path.

1 Open the bypass tray cover.

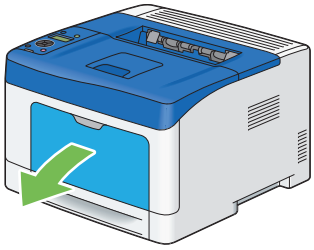

2 Grasp both sides of the bypass tray, and then pull the bypass tray from the printer.

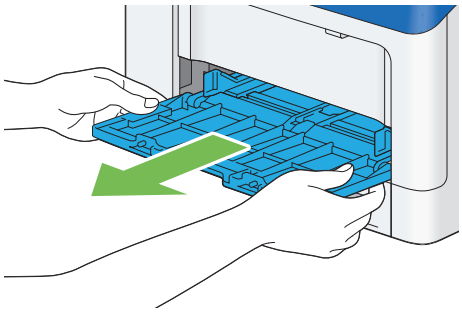

3 Pull the standard 250 sheet tray from the printer about 200 mm.

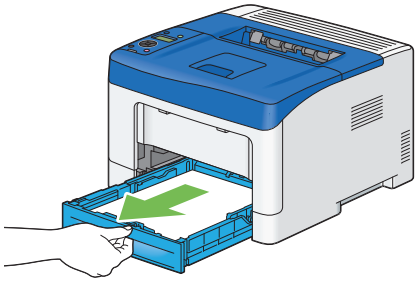

4 Hold the standard 250 sheet tray with both hands, and remove it from the printer.

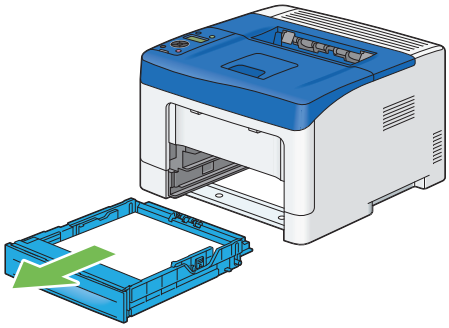

5 Pull the rear door handle to open the rear door.

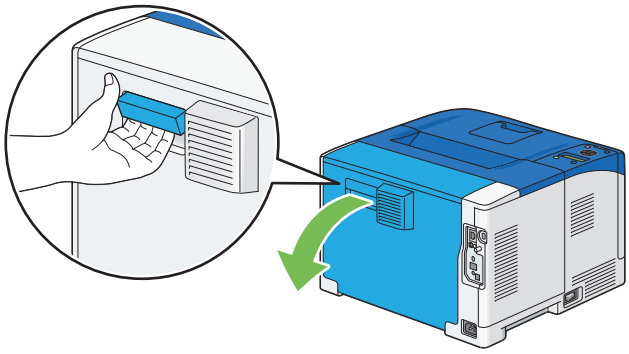

6 Remove the jammed paper.

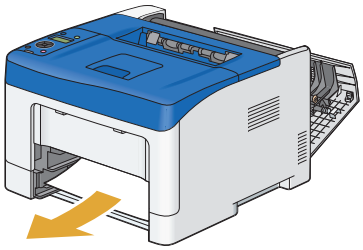

7 Insert the standard 250 sheet tray into the printer, and push until it stops.

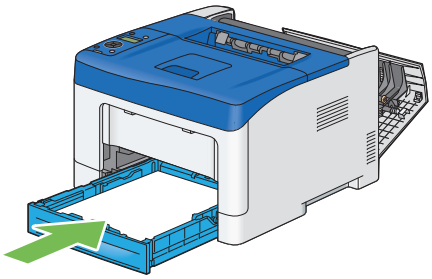

IMPORTANT:

- Do not use excessive force on the tray. Doing so could damage the tray or the inside of the printer.

8 Insert the bypass tray into the printer, push until it stops, and close the cover.

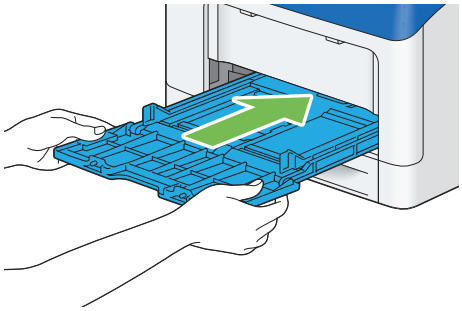

9 Close the rear door, and press the OK button.

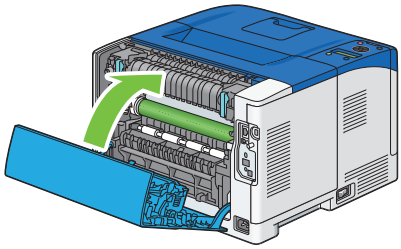

■ Clearing Paper Jams From the Fusing Unit

IMPORTANT:

- Ensure nothing touches or scratches the surface (black-colored film) of the transfer unit. Scratches, dirt, or oil from your hands on the film of the transfer unit may reduce print quality.
- Protect the drum of the drum cartridge against bright light. If the rear door remains open for more than 3 minutes, print quality may deteriorate.

NOTE:

- To resolve the error displayed on the LCD panel, you must clear all print media from the print media path.

1 Open the bypass tray cover, or remove the remaining documents from the bypass tray.

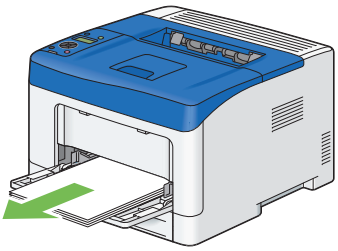

2 Grasp both sides of the bypass tray, and then pull the bypass tray from the printer.

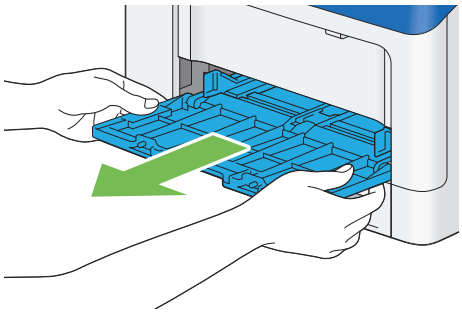

3 Pull the standard 250 sheet tray from the printer about 200 mm.

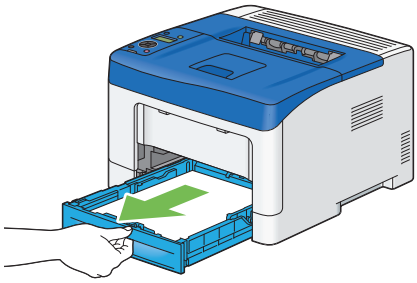

4 Hold the standard 250 sheet tray with both hands, and remove it from the printer.

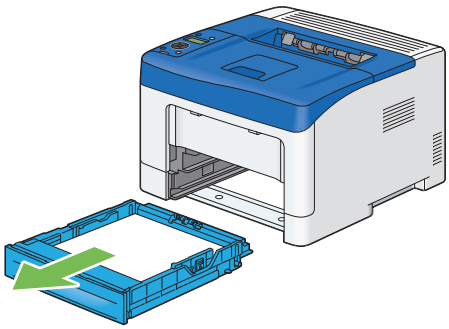

5 Pull the rear door handle to open the rear door.

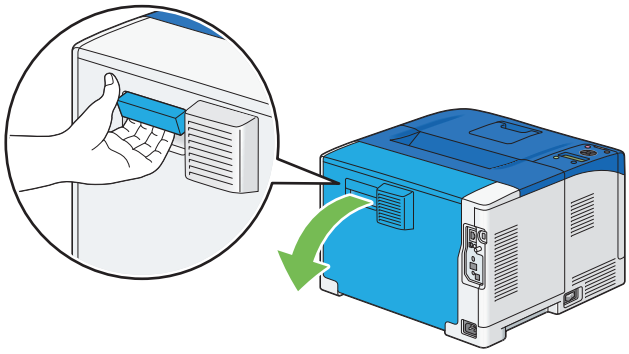

6 Lift the levers on both sides of the fusing unit.

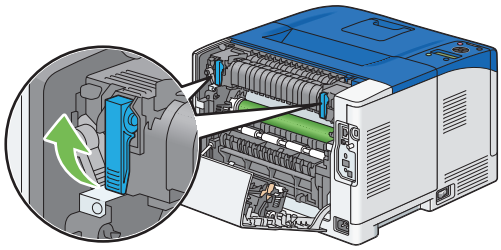

IMPORTANT:

- The fusing unit is hot. Do not touch it, doing so may cause burns.

7 If the document is jammed under the fusing unit, remove the jammed document from under the fusing unit.

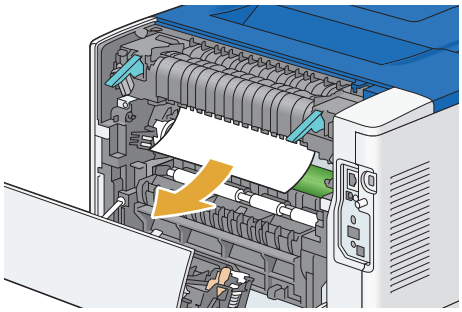

If the document is jammed above the fusing unit:

a Hold and lower the right side of the tab to open the inner part.

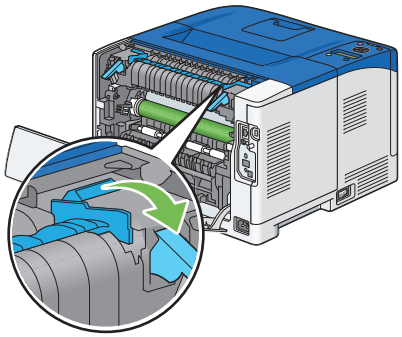

b Remove the jammed document from above the fusing unit.

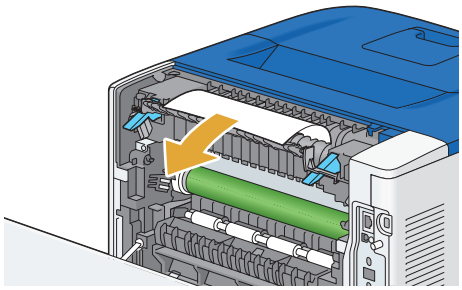

c Replace the inner part.

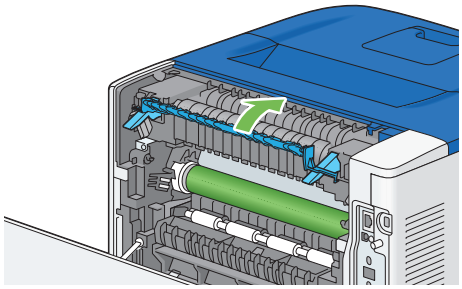

8 Insert the standard 250 sheet tray into the printer, and push until it stops.

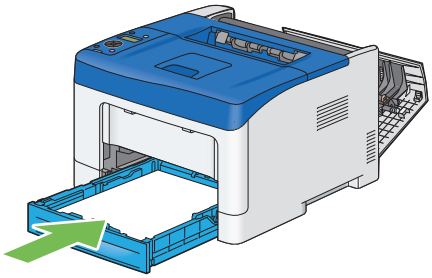

IMPORTANT:

- Do not use excessive force on the tray. Doing so could damage the tray or the inside of the printer.

9 Insert the bypass tray into the printer, push until it stops, and close the cover.

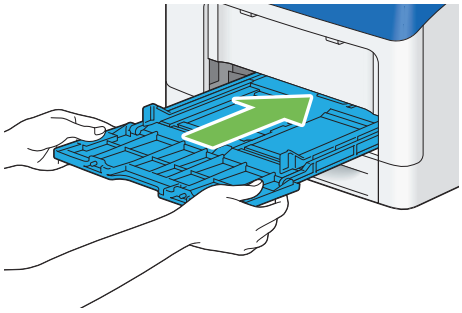

10 Press down the levers on both sides of the fusing unit, and then close the rear door.

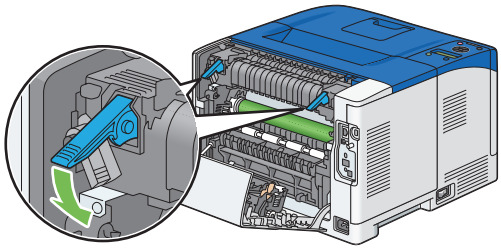

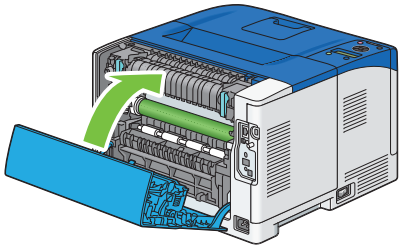

■ Clearing Paper Jams From the Duplexer

IMPORTANT:

- Ensure nothing touches or scratches the surface (black-colored film) of the transfer unit. Scratches, dirt, or oil from your hands on the film of the transfer unit may reduce print quality.
- Protect the drum of the drum cartridge against bright light. If the rear door remains open for more than 3 minutes, print quality may deteriorate.

NOTE:

- To resolve the error displayed on the LCD panel, you must clear all print media from the print media path.

1 Pull the rear door handle to open the rear door.

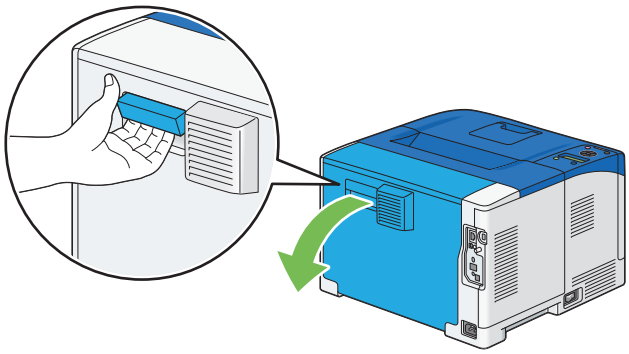

2 Remove the jammed paper from the duplexer.

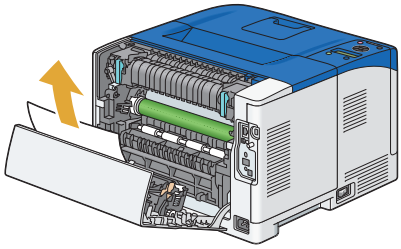

3 Close the rear door.

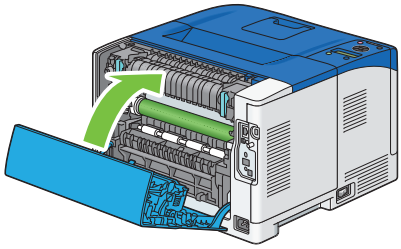

■ Clearing Paper Jams From the Regi Roll

IMPORTANT:

- Ensure nothing touches or scratches the surface (black-colored film) of the transfer unit. Scratches, dirt, or oil from your hands on the film of the transfer unit may reduce print quality.
- Protect the drum of the drum cartridge against bright light. If the rear door remains open for more than 3 minutes, print quality may deteriorate.

NOTE:

- To resolve the error displayed on the LCD panel, you must clear all print media from the print media path.

1 Open the bypass tray cover, or remove the remaining documents from the bypass tray.

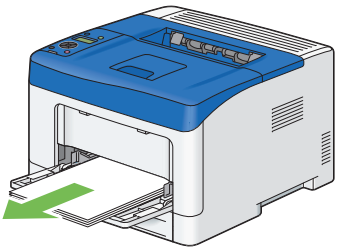

2 Grasp both sides of the bypass tray, and then pull the bypass tray from the printer.

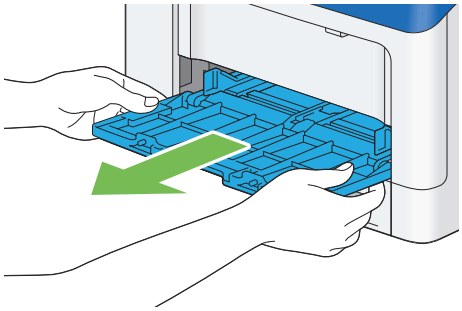

3 Pull the standard 250 sheet tray from the printer about 200 mm.

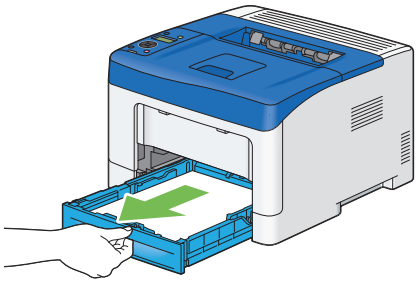

4 Hold the standard 250 sheet tray with both hands, and remove it from the printer.

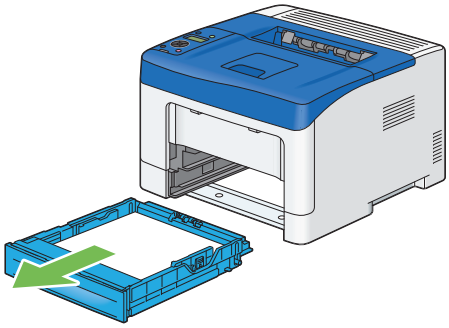

5 Pull the rear door handle to open the rear door.

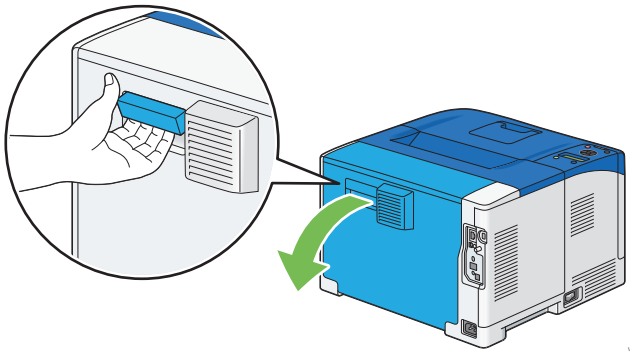

6 Remove the jammed paper from the regi roll.

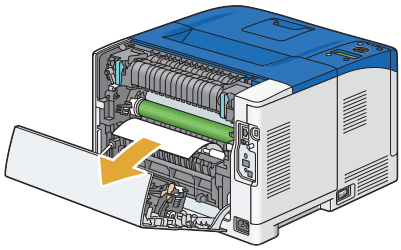

7 Insert the standard 250 sheet tray into the printer, and push until it stops.

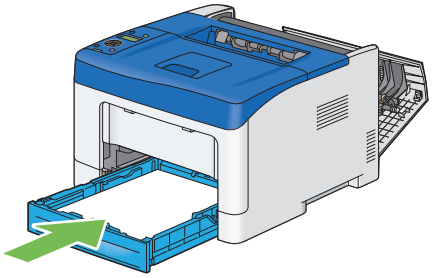

IMPORTANT:

- Do not use excessive force on the tray. Doing so could damage the tray or the inside of the printer.

8 Insert the bypass tray into the printer, push until it stops, and close the cover.

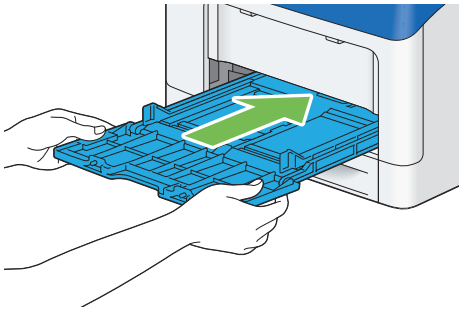

9 Close the rear door.

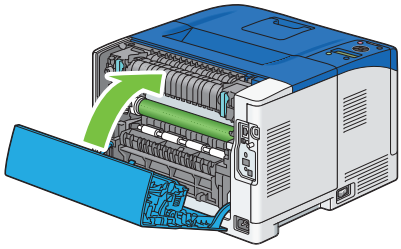

■ Clearing Paper Jams From the Optional 550 Sheet Feeder

NOTE:

- To resolve the error displayed on the LCD panel, you must clear all print media from the print media path.

1 Pull the optional 550 sheet feeder from the printer about 200 mm.

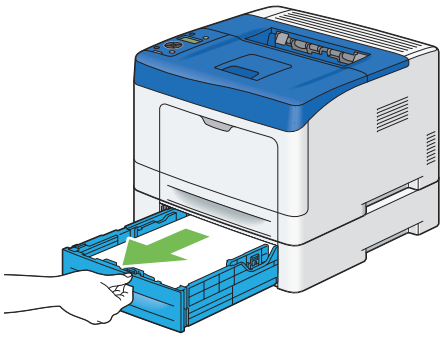

2 Hold the optional 550 sheet feeder with both hands, and remove it from the printer.

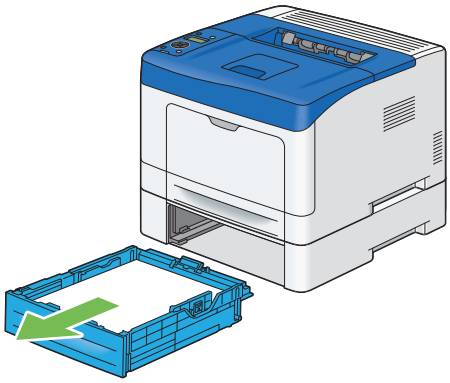

3 Pull the rear door handle to open the rear door.

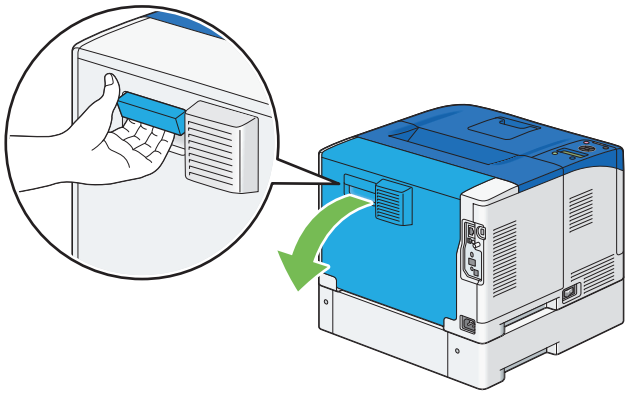

4 Remove the jammed paper.

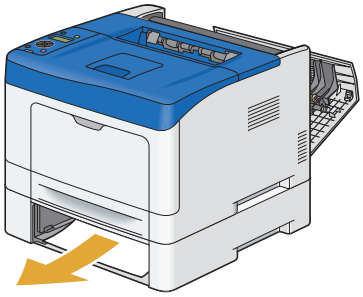

5 Insert the optional 550 sheet feeder into the printer, and push until it stops.

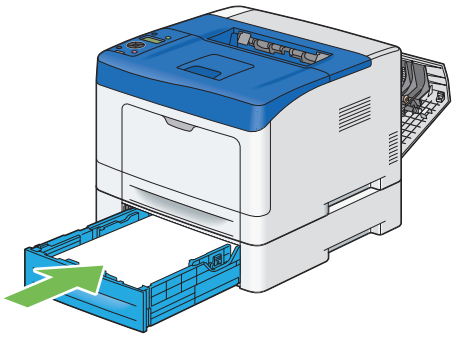

IMPORTANT:

- Do not use excessive force on the feeder. Doing so could damage the feeder or the inside of the printer.

6 Close the rear door, and press the (OK) button.

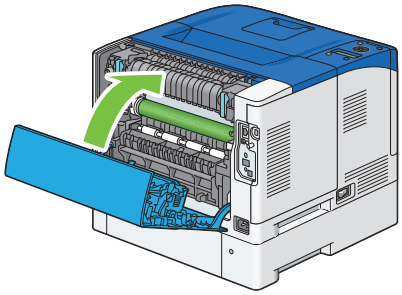

■ Jam Problems

This section includes:

- "Standard 250 Sheet Tray/Optional 550 Sheet Feeder Misfeed Jam" on page 154
- "Bypass Tray Misfeed Jam" on page 155
- "Regi Jam (Exit Sensor On JAM)" on page 156
- "Exit Jam (Exit Sensor Off JAM)" on page 156
- "Standard 250 Sheet Tray/Optional 550 Sheet Feeder Multi-feed Jam" on page 157
- "Bypass Tray Multi-feed Jam" on page 157

Standard 250 Sheet Tray/Optional 550 Sheet Feeder Misfeed Jam

Problem	Action
Print media misfeeds occur in the standard 250 sheet tray or the optional 550 sheet feeder.	Ensure that the standard 250 sheet tray or the optional 550 sheet feeder is properly inserted. If the problem persists, verify that the correct print media is being used.
	Verify that the correct print media is being used. **See also:** • "Usable Print Media" on page 74 If not, use the print media recommended for the printer. If the problem persists, ensure that the print media is not curled.
	Ensure that the print media is not curled. If the problem persists, fan the print media.
	Ensure that the print media is not damp. If the print media is damp, turn over the print media. If the problem persists, use print media that is not damp. If the print media is not damp, fan the print media.
	Fan the print media. If the problem persists, wipe the feed roller in the standard 250 sheet tray or the optional 550 sheet feeder with a cloth moistened with water.
	Wipe the feed roller in the standard 250 sheet tray or the optional 550 sheet feeder with a cloth moistened with water. **See also:** • "Cleaning Inside the Printer" on page 184 If the problem persists, contact the Fuji Xerox local representative office or an authorized dealer.

Bypass Tray Misfeed Jam

Problem	Action
Print media misfeeds occur in the bypass tray.	Ensure that the bypass tray is properly inserted. If the problem persists, verify that the correct print media is being used.
	Verify that the correct print media is being used. **See also:** • "Usable Print Media" on page 74 If not, use the print media recommended for the printer. If the problem persists when using cardstock paper, set **Print Peeling Prevention Mode** to **On** on the **Advanced** tab of the PCL 6 driver. For more information, refer to the Help provided for the PCL 6 driver. If the problem persists, ensure that the print media is not damp.
	Ensure that the print media is not curled. If the problem persists, fan the print media.
	Ensure that the print media is not damp. If the print media is damp, turn over the print media. If the problem persists, use print media that is not damp. If the print media is not damp, fan the print media.
	Fan the print media. If the problem persists, wipe the feed roller in the bypass tray with a cloth moistened with water.
	Wipe the feed roller in the bypass tray with a cloth moistened with water. **See also:** • "Cleaning Inside the Printer" on page 184 If the problem persists, contact the Fuji Xerox local representative office or an authorized dealer.

Regi Jam (Exit Sensor On JAM)

Problem	Action
Regi jam (Exit Sensor On JAM) occurs.	Ensure that the drum cartridge is installed correctly. If the problem persists, replace the drum cartridge if you have a spare cartridge as instructed in."Replacing the Drum Cartridge" on page 189
	Replace the drum cartridge if you have a spare cartridge. **See also:** • "Replacing the Drum Cartridge" on page 189 If the problem persists, ensure that the fusing unit is installed correctly.
	Ensure that the fusing unit is installed correctly. If the problem persists, replace the fusing unit as instructed in."Replacing the Fusing Unit, Transfer Unit and Retard Roll" on page 192
	Replace the fusing unit. **See also:** • "Replacing the Fusing Unit, Transfer Unit and Retard Roll" on page 192 If the problem persists, ensure that the transfer unit is installed correctly.
	Ensure that the transfer unit is installed correctly. If the problem persists, replace the transfer unit and the retard roll as instructed in."Replacing the Fusing Unit, Transfer Unit and Retard Roll" on page 192
	Replace the transfer unit and the retard roll. **See also:** • "Replacing the Fusing Unit, Transfer Unit and Retard Roll" on page 192 If the problem persists, contact the Fuji Xerox local representative office or an authorized dealer.

Exit Jam (Exit Sensor Off JAM)

Problem	Action
Exit jam (Exit Sensor Off JAM) occurs.	Ensure that the fusing unit is installed correctly. If the problem persists, replace the fusing unit as instructed in."Replacing the Fusing Unit, Transfer Unit and Retard Roll" on page 192
	Replace the fusing unit. **See also:** • "Replacing the Fusing Unit, Transfer Unit and Retard Roll" on page 192 If the problem persists, contact the Fuji Xerox local representative office or an authorized dealer.

Standard 250 Sheet Tray/Optional 550 Sheet Feeder Multi-feed Jam

Problem	Action
Print media multiple feeds occur in the standard 250 sheet tray or optional 550 sheet feeder.	Ensure that the tray or feeder is properly inserted. If using coated paper, load coated paper one sheet at a time. If using other type of print media, use print media that is not damp.
	Load coated paper one sheet at a time. If the problem persists, fan the print media.
	Use print media that is not damp. If the problem persists, fan the print media.
	Fan the print media. If the problem persists, wipe the feed roller in the tray or feeder where the multifeed occurred with a cloth moistened with water.
	Wipe the feed roller in the tray or feeder where the multifeed occurred with a cloth moistened with water. **See also:** • "Cleaning Inside the Printer" on page 184 If the problem persists, contact the Fuji Xerox local representative office or an authorized dealer.

Bypass Tray Multi-feed Jam

Problem	Action
Print media multiple feeds occur in the bypass tray.	Ensure that the media type you are using. If using coated paper, load coated paper one sheet at a time. If using other type of print media, use print media that is not damp.
	Load coated paper one sheet at a time. If the problem persists, fan the print media.
	Use print media that is not damp. If the problem persists, fan the print media.
	Fan the print media. If the problem persists, wipe the feed roller in the tray where the multifeed occurred with a cloth moistened with water.
	Wipe the feed roller in the tray where the multifeed occurred with a cloth moistened with water. **See also:** • "Cleaning Inside the Printer" on page 184 If the problem persists, contact the Fuji Xerox local representative office or an authorized dealer.

Basic Printer Problems

Some printer problems can be easily resolved. If a problem occurs with your printer, check each of the following:

- The power cord is connected to the printer, and to a properly grounded electrical outlet.
- The printer is turned on.
- The electrical outlet is not turned off at any switch or breaker.
- Other electrical equipment plugged into the outlet is working.
- All options are properly installed.

If you have checked all of the above and still have a problem, turn off the printer, wait for 10 seconds, and then turn on the printer. This often fixes the problem.

IMPORTANT:

- Note that the data in the memory are cleared when the printer is turned off.

NOTE:

- If error messages are displayed on the LCD panel screen or on your computer screen, follow the on-screen instructions to resolve the printer problems. For details about error messages and error codes, see "Understanding Printer Messages" on page 178.

Display Problems

Problem	Action
Menu settings changed from the operator panel have no effect.	Settings in the software program, the print driver, or the printer utilities have precedence over the settings made on the operator panel.

Printing Problems

NOTE:

- If `Panel Lock Set` is set to `Enable`, you need to enter the four digit password to enter the `Admin Menu` menu.

Problem	Action
Job did not print or incorrect characters printed.	Ensure that the top menu appears on the LCD panel before you send a job to print. Press the (**Menu**) button twice to return to the top menu.
	Ensure that the print media is loaded in the printer. Press the (**Menu**) button twice to return to the top menu.
	Verify that you are using the correct print driver.
	Ensure that the correct USB cable, Ethernet cable or wireless printer adapter is securely connected to the printer.
	Verify that the correct print media size is selected.
	If you are using a print spooler, verify that the spooler has not stalled.
	Check the printer's interface from the `Admin Menu` menu. Determine the host interface you are using. Print a Panel Settings page to verify that the current interface settings are correct.
Print media misfeeds or multiple feeds occur.	Ensure that the print media you are using meets the specifications for your printer. **See also:** • "Usable Print Media" on page 74
	Fan the print media before loading it.
	Ensure that the print media is loaded correctly.
	Ensure that the width and length guides of the print media sources are adjusted correctly.
	Ensure that the standard 250 sheet tray, the optional 550 sheet feeder, or the bypass tray is securely inserted.
	Do not overload the standard 250 sheet tray, the optional 550 sheet feeder, or the bypass tray.
	Do not force print media into the bypass tray when you load it; otherwise, it may skew or buckle.
	Ensure that the print media is not curled.
	Face the recommended print side up. **See also:** • "Loading Print Media" on page 78
	Turn the print media over or around and try printing again to see if feeding improves.
	Do not mix print media types.
	Do not mix reams of print media.
	Remove the top and bottom curled sheets of a ream before loading the print media.
	Load print media only when the standard 250 sheet tray, the optional 550 sheet feeder, or the bypass tray is empty.
	Wipe the feed roller in the standard 250 sheet tray, the optional 550 sheet feeder, or the bypass tray with a cloth moistened with water. **See also:** • "Cleaning Inside the Printer" on page 184
The envelope is creased after printed.	Make sure that the envelope is loaded in the bypass tray as instructed in "Loading Envelope in the Bypass Tray" on page 86.
Page breaks in unexpected places.	Increase the value for the Timeout on the operator panel or CentreWare Internet Services.
Print media does not stack neatly in the output tray.	Turn the print media stack over in the standard 250 sheet tray or the bypass tray.
Cannot print from the standard 250 sheet tray or the optional 550 sheet feeder because the print media in the tray or feeder is curled.	Load the print media into the bypass tray.

Print Quality Problems

This section includes:

- "The Output Is Too Light" on page 162
- "Toner Smears or Print Comes Off" on page 163
- "Random Spots/Blurred Images" on page 164
- "The Entire Output Is Blank" on page 165
- "Streaks Appear on the Output" on page 166
- "Vertical Blanks" on page 167
- "Mottle" on page 167
- "Ghosting" on page 168
- "Light-Induced Fatigue" on page 168
- "Fog" on page 169
- "Bead-Carry-Out (BCO)" on page 169
- "Jagged Characters" on page 170
- "Banding" on page 170
- "Auger Mark" on page 171
- "Wrinkled/Stained Paper" on page 172
- "Damage on the Leading Edge of Paper" on page 173
- "The Top and Side Margins Are Incorrect" on page 173
- "Protrudent/Bumpy Paper" on page 174
- "Images Are Skewed" on page 174

NOTE:

- In this section, some procedures use the operator panel, CentreWare Internet Services or PCL 6 driver.

See also:

- "Understanding the Printer Menus" on page 106
- "CentreWare Internet Services" on page 41

■ The Output Is Too Light

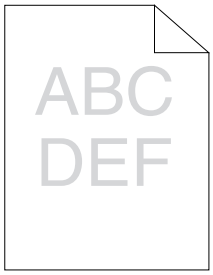

Problem	Action
The output is too light.	The toner cartridge may be low or need to be replaced. Confirm the amount of toner in the toner cartridge. 1 Check the toner level in the **Status Monitor** window. 2 Replace the toner cartridge as necessary. If the problem persists, disable **Toner Saver** in the print driver.
	Disable **Toner Saver** in the print driver. The following procedure uses the PCL 6 driver as an example. 1 On the **Image Options** tab, ensure that **Off** is selected in the **Toner Saver** drop-down menu. If the problem persists, try changing the **Paper Type** setting in the print driver.
	The print media surface may be uneven. Try changing the **Paper Type** setting in the print driver. For example, change the plain paper to heavyweight using a PCL 6 driver. 1 On the **Paper/Output** tab, change the **Paper Type** setting. If the problem persists, verify that the correct print media is being used.
	Verify that the correct print media is being used. **See also:** • "Usable Print Media" on page 74 If not, use the print media recommended for the printer. If the problem persists, ensure the transfer unit is correctly installed.
	Ensure the transfer unit is correctly installed. **See also:** • "Installing a Transfer Unit" on page 194 If the problem persists, replace the drum cartridge if you have a spare cartridge.
	Adjust the density level. 1 Check the density level in the `Adjust Density` menu. 2 Adjust the density level lower. **See also:** • "Adjust Density" on page 127 If the problem persists, clean the toner in a drum cartridge.
	Clean the toner in a drum cartridge. 1 On the operator panel, press the (**Menu**) button and select `Admin Menu` → `Maintenance Mode` → `Toner Refresh`. 2 Press the (OK) button. If the problem persists, replace the drum cartridge if you have a spare cartridge.
	Replace the drum cartridge if you have a spare cartridge. **See also:** • "Replacing the Drum Cartridge" on page 189 • "Installing a Drum Cartridge" on page 191 If the problem persists, contact the Fuji Xerox local representative office or an authorized dealer.

■ Toner Smears or Print Comes Off

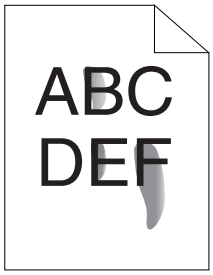

Problem	Action
Toner smears or print comes off.	The print media surface may be uneven. Try changing the **Paper Type** setting in the print driver. For example, change the plain paper to heavyweight using a PCL 6 driver. 1 On the **Paper/Output** tab, change the **Paper Type** setting. If the problem persists, verify that the correct print media is being used.
	Verify that the correct print media is being used. **See also:** • "Usable Print Media" on page 74 If not, use the print media recommended for the printer. If the problem persists, replace the drum cartridge if you have a spare cartridge.
	Replace the drum cartridge if you have a spare cartridge. 1 Replace the drum cartridge. **See also:** • "Replacing the Drum Cartridge" on page 189 • "Installing a Drum Cartridge" on page 191 2 After you replace the drum cartridge, test print your document again. If the problem persists, replace the fusing unit as instructed in "Replacing the Fusing Unit, Transfer Unit and Retard Roll" on page 192.
	Replace the fusing unit. **See also:** • "Replacing the Fusing Unit, Transfer Unit and Retard Roll" on page 192 If the problem persists, replace the transfer unit and the retard roll as instructed in "Replacing the Fusing Unit, Transfer Unit and Retard Roll" on page 192.
	Replace the transfer unit and the retard roll. **See also:** • "Replacing the Fusing Unit, Transfer Unit and Retard Roll" on page 192 If the problem persists, contact the Fuji Xerox local representative office or an authorized dealer.

■ Random Spots/Blurred Images

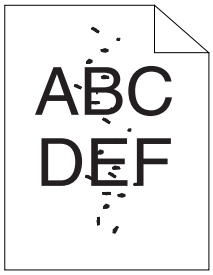

Problem	Action
The printed result has random spots or is blurred.	Ensure that the toner cartridge are installed correctly. **See also:** • "Installing a Toner Cartridge" on page 188 If the problem persists, ensure that the drum cartridge is installed correctly.
	Ensure that the drum cartridge is installed correctly. **See also:** • "Replacing the Drum Cartridge" on page 189 • "Installing a Drum Cartridge" on page 191 If the problem persists, clean the chute above the regi roll inside the rear of the printer with a dry cloth.
	Clean the chute above the regi roll inside the rear of the printer with a dry cloth. **See also:** • "Rear View" on page 21 If the problem persists, lower the transfer unit voltage.
	Lower the transfer unit voltage. 1 Check the transfer unit voltage in the `Adjust TransUnit` menu. 2 Decrease the voltage. **See also:** • "Adjust TransUnit" on page 126 If the problem persists, replace the drum cartridge if you have a spare cartridge.
	Replace the drum cartridge if you have a spare cartridge. **See also:** • "Replacing the Drum Cartridge" on page 189 • "Installing a Drum Cartridge" on page 191 If the problem persists, contact the Fuji Xerox local representative office or an authorized dealer.

■ The Entire Output Is Blank

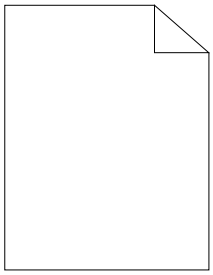

Problem	Action
The entire output is blank.	The toner cartridge may be low or need to be replaced. Confirm the amount of toner in the toner cartridge. 1 Check the toner level in the **Status Monitor** window. 2 Replace the toner cartridge as necessary. If the problem persists, disable **Toner Saver** in the print driver.
	Disable **Toner Saver** in the print driver. The following procedure uses the PCL 6 driver as an example. 1 On the **Image Options** tab, ensure that **Off** is selected in the **Toner Saver** drop-down menu. If the problem persists, try changing the **Paper Type** setting in the print driver.
	The print media surface may be uneven. Try changing the **Paper Type** setting in the print driver. For example, change the plain paper to heavyweight using the PCL 6 driver. 1 On the **Paper/Output** tab, change the **Paper Type** setting. If the problem persists, verify that the correct print media is being used.
	Verify that the correct print media is being used. **See also:** • "Usable Print Media" on page 74 If not, use the print media recommended for the printer. If the problem persists, ensure the transfer unit is correctly installed.
	Ensure the transfer unit is correctly installed. **See also:** • "Installing a Transfer Unit" on page 194 If the problem persists, replace the drum cartridge if you have a spare cartridge.
	Replace the drum cartridge if you have a spare cartridge. **See also:** • "Replacing the Drum Cartridge" on page 189 • "Installing a Drum Cartridge" on page 191 If the problem persists, contact the Fuji Xerox local representative office or an authorized dealer.

■ Streaks Appear on the Output

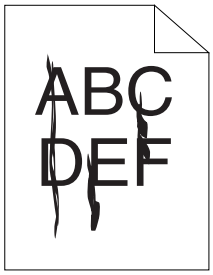

Problem	Action
Streaks appear on the output.	The toner cartridge may be low or need to be replaced. Confirm the amount of toner in the toner cartridge. 1 Check the toner level in the **Status Monitor** window. 2 Replace the toner cartridge as necessary. If the problem persists, stir the developer in a drum cartridge.
	Stir the developer in a drum cartridge. 1 On the operator panel, press the (**Menu**) button and select `Admin Menu` → `Maintenance Mode` → `Clean Developer`. 2 Press the (OK) button. If the problem persists, replace the drum cartridge if you have a spare cartridge.
	Replace the drum cartridge if you have a spare cartridge. **See also:** • "Replacing the Drum Cartridge" on page 189 • "Installing a Drum Cartridge" on page 191 If the problem persists, contact the Fuji Xerox local representative office or an authorized dealer.

Vertical Blanks

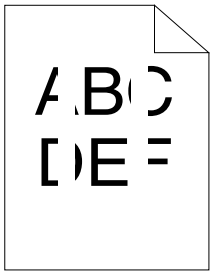

Problem	Action
The printed result has vertical blanks.	Clean the rear side of the drum cartridge with a dry cloth. 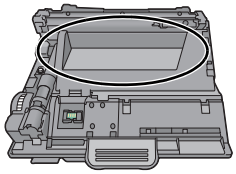 **See also:** • "Replacing the Drum Cartridge" on page 189 If the problem persists, ensure the light path is not covered.
	Ensure the light path is not covered. 1 Remove the drum cartridge, and keep it in the dark place. **See also:** • "Replacing the Drum Cartridge" on page 189 2 Check the light path, and then remove the shielding. 3 Re-install the drum cartridge. **See also:** • "Installing a Drum Cartridge" on page 191 If the problem persists, replace the drum cartridge if you have a spare cartridge.
	Replace the drum cartridge if you have a spare cartridge. **See also:** • "Replacing the Drum Cartridge" on page 189 • "Installing a Drum Cartridge" on page 191 If the problem persists, contact the Fuji Xerox local representative office or an authorized dealer.

Mottle

Problem	Action
The printed result has mottled appearance.	Verify that the print media recommended for the printer is being used. If you use non-recommended print media, use the print media recommended for the printer. If the problem persists, raise the transfer unit voltage.
	Raise the transfer unit voltage. 1 Check the transfer unit voltage in the `Adjust TransUnit` menu. 2 Increase the voltage. **See also:** • "Adjust TransUnit" on page 126 If the problem persists, contact the Fuji Xerox local representative office or an authorized dealer.

Ghosting

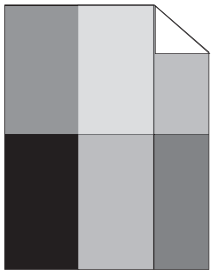

Problem	Action
The printed result has ghosting.	If the type of the ghosting is positive ghost: Replace the drum cartridge if you have a spare cartridge. **See also:** • "Replacing the Drum Cartridge" on page 189 • "Installing a Drum Cartridge" on page 191 If the problem persists, contact the Fuji Xerox local representative office or an authorized dealer.
	If the type of the ghosting is negative ghost: Verify that the print media recommended for the printer is being used. If you are using non-recommended print media, use the print media recommended for the printer. **See also:** • "Ghost Control" on page 129 If the problem is solved, adjust the transfer bias. If the problem persists, replace the drum cartridge if you have a spare cartridge.
	Adjust the transfer bias. 1 On the operator panel, press the (**Menu**) button and select `Admin Menu` → `Maintenance Mode` → `Adjust TransUnit`. 2 Adjust the setting for the type of print media being used. If the problem persists, contact the Fuji Xerox local representative office or an authorized dealer.

Light-Induced Fatigue

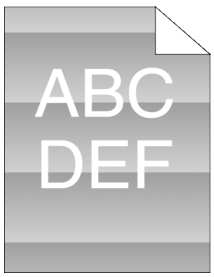

Problem	Action
The printed result has light-induced fatigue pattern.	Replace the drum cartridge if you have a spare cartridge. **See also:** • "Replacing the Drum Cartridge" on page 189 • "Installing a Drum Cartridge" on page 191 If the problem persists, contact the Fuji Xerox local representative office or an authorized dealer.

Fog

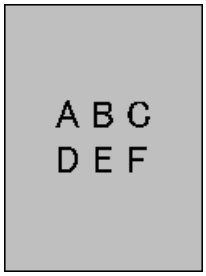

Problem	Action
The printed result is foggy.	Replace the drum cartridge if you have a spare cartridge. **See also:** • "Replacing the Drum Cartridge" on page 189 • "Installing a Drum Cartridge" on page 191 If the problem persists, contact the Fuji Xerox local representative office or an authorized dealer.

Bead-Carry-Out (BCO)

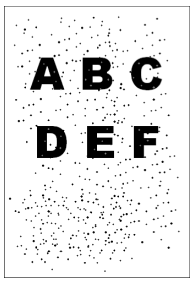

Problem	Action
Bead-Carry-Out (BCO) is happening.	Replace the drum cartridge if you have a spare cartridge. **See also:** • "Replacing the Drum Cartridge" on page 189 • "Installing a Drum Cartridge" on page 191 If the problem persists, contact the Fuji Xerox local representative office or an authorized dealer.

Jagged Characters

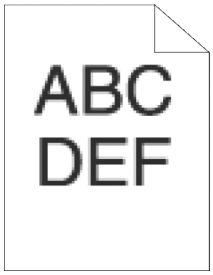

Problem	Action
The printed result has jagged characters.	Enable **Bitmap Smoothing** in the print driver. The following procedure uses the PCL 6 driver as an example. 1 On the **Advanced** tab, set **Bitmap Smoothing** under **Image Options** to **On**. If the problem persists, check whether or not the downloaded font you are using is recommended.
	If using a downloaded font, ensure that the font is recommended for the printer, operating system, and the application being used. If the problem persists, contact the Fuji Xerox local representative office or an authorized dealer.

Banding

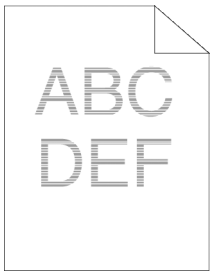

Problem	Action
The printed result has banding.	Replace the drum cartridge if you have a spare cartridge. **See also:** • "Replacing the Drum Cartridge" on page 189 • "Installing a Drum Cartridge" on page 191 If the problem persists, contact the Fuji Xerox local representative office or an authorized dealer.
	Replace the fusing unit if you have a spare unit. **See also:** • "Replacing the Fusing Unit, Transfer Unit and Retard Roll" on page 192 If the cause of the problem is not located, contact the Fuji Xerox local representative office or an authorized dealer.
	Replace the transfer unit and the retard roll. **See also:** • "Replacing the Fusing Unit, Transfer Unit and Retard Roll" on page 192 If the cause of the problem is not located, contact the Fuji Xerox local representative office or an authorized dealer.

■ Auger Mark

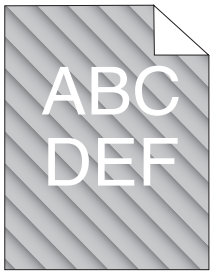

Problem	Action
The printed result has auger mark.	Stir the developer in a drum cartridge. 1 On the operator panel, press the (**Menu**) button and select `Admin Menu` → `Maintenance Mode` → `Clean Developer`. 2 Press the (OK) button. If the problem persists, replace the drum cartridge if you have a spare cartridge.
	Replace the drum cartridge if you have a spare cartridge. **See also:** • "Replacing the Drum Cartridge" on page 189 • "Installing a Drum Cartridge" on page 191 If the problem persists, contact the Fuji Xerox local representative office or an authorized dealer.

■ Wrinkled/Stained Paper

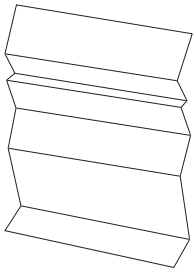

Problem	Action
The output is wrinkled. The output is stained.	Verify that the correct print media is being used. **See also:** • "Usable Print Media" on page 74 • "About Print Media" on page 72 If not, use the print media recommended for the printer. If the problem persists, ensure that the envelope switches and levers of the fusing unit are set to the correct position.
	Ensure that the envelope switches and levers of the fusing unit are set to the correct position. When printing on an envelope, set the printer to the envelope mode. **See also:** • "To Set the Printer to the Envelope Mode" on page 83 If the problem persists, check the wrinkle of the envelope. When printing on print media other than envelopes, cancel the envelope mode. **See also:** • "To Cancel the Envelope Mode" on page 84 If the problem persists, contact the Fuji Xerox local representative office or an authorized dealer.
	Envelopes may get wrinkled depending on their paper type and condition. Check whether the wrinkle of the four edges of the envelope is within 30 mm. If the wrinkle of the four edges of the envelope is within 30 mm, this type of wrinkle is considered normal. Your printer is not at fault. If not, load the envelopes in the bypass tray properly.
	Load the envelopes in the bypass tray properly. If the problem persists, contact the Fuji Xerox local representative office or an authorized dealer.

■ Damage on the Leading Edge of Paper

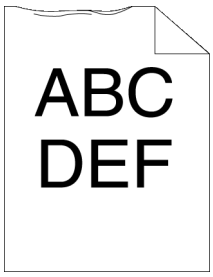

Problem	Action
The output is damaged on its leading edge.	When using the bypass tray, reverse the paper and then try again. If the problem persists, change the paper with another one and then try again. When using the standard 250 sheet tray or optional 550 sheet feeder, change the paper and then try again. If the problem persists, contact the Fuji Xerox local representative office or an authorized dealer.
	Change the paper with another one and then try again. If the problem persists, use the standard 250 sheet tray or optional 550 sheet feeder in place of the bypass tray.
	Use the standard 250 sheet tray or optional 550 sheet feeder in place of the bypass tray. If the problem persists, contact the Fuji Xerox local representative office or an authorized dealer.

■ The Top and Side Margins Are Incorrect

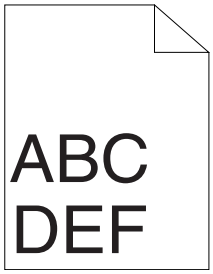

Problem	Action
The top and side margins are incorrect.	Ensure that the margins are set correctly on the application being used. If the problem persists, contact the Fuji Xerox local representative office or an authorized dealer.

Protrudent/Bumpy Paper

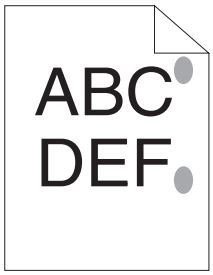

Problem	Action
Printed surface got protrudent/bumpy.	Clean up the fusing unit. 1 Load one sheet of paper in the bypass tray, and then print a solid image all over paper. 2 Load the printed sheet with the side to be printed on facing down, and then print a blank sheet of paper. If the problem persists, contact the Fuji Xerox local representative office or an authorized dealer.

Images Are Skewed

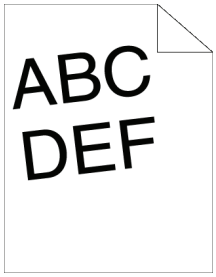

Problem	Action
The printed result are skewed.	Adjust the paper guides properly. If the problem persists, install the transfer unit according to an appropriate procedure.
	Install the transfer unit according to an appropriate procedure. **See also:** • "Installing a Transfer Unit" on page 194 If the problem persists, contact the Fuji Xerox local representative office or an authorized dealer.

Noise

Problem	Action
The printed result has the noise.	Replace the transfer unit and the retard roll. **See also:** • "Replacing the Fusing Unit, Transfer Unit and Retard Roll" on page 192 If the problem persists, replace the drum cartridge.
	Replace the fusing unit. **See also:** • "Replacing the Fusing Unit, Transfer Unit and Retard Roll" on page 192 If the problem persists, replace the toner cartridge.
	Replace the drum cartridge if you have a spare cartridge. **See also:** • "Replacing the Drum Cartridge" on page 189 If the problem persists, replace the toner cartridge.
	Replace the toner cartridge. **See also:** • "Replacing the Toner Cartridge" on page 187 If the problem persists, contact the Fuji Xerox local representative office or an authorized dealer.

Problems With Installed Optional Accessories

If an option does not operate correctly following installation or stops working:

- Turn off the printer, wait for 10 seconds, and then turn on the printer. If this does not fix the problem, unplug the printer, and check the connection between the option and the printer.

  IMPORTANT:

  - Note that the data in the memory are cleared when the printer is turned off.
- Ensure the option is selected in the print driver you are using.
- Print the Printer Settings page to see if the option is listed in the **Printer Options** list. If the option is not listed, re-install it.

  See also:

  - "Report / List" on page 106

The following table lists printer's option and corrective action for related problem. If the suggested corrective action does not correct the problem, contact customer support.

Problem	Action
The optional 550 sheet feeder does not work correctly.	Ensure that the optional 550 sheet feeder is correctly installed on the printer. Re-install the optional 550 sheet feeder. **See also:** • "Removing the Optional 550 Sheet Feeder" on page 207 • "Installing the Optional 550 Sheet Feeder" on page 27 If the problem persists, contact customer support.
	Ensure that the print media is loaded correctly. **See also:** • "Loading Print Media in the Standard 250 Sheet Tray and the Optional 550 Sheet Feeder" on page 78 If the problem persists, contact customer support.
The optional 512MB memory does not work correctly.	Ensure that the optional 512MB memory is securely connected to the memory connector. If the problem persists, contact customer support.
The optional wireless printer adapter does not work correctly.	Ensure that the optional wireless printer adapter is securely inserted to the correct slot.

Other Problems

Problem	Action
Condensation has occurred inside the printer.	This usually occurs within several hours after you heat the room in winter. This also occurs when the printer is operating in a location where relative humidity reaches 85 % or more. Adjust the humidity or relocate the printer to an appropriate environment.

Understanding Printer Messages

The printer LCD panel displays messages describing the current state of the printer and indicates possible printer problems you must resolve. This section describes messages, their meanings, and how to clear the messages.

When you contact customer support about an error, have the error codes and messages ready.

IMPORTANT:

- When an error code is displayed, the print data remaining on the printer and the information accumulated in the memory of the printer are not secured.
- When you turn off the printer to recover, note that the data in the memory are cleared when the printer is turned off.

NOTE:

- An error code is listed in an error message.
- For error messages that are not listed in this chapter, refer to instructions in each error messages.

Error-Code	What You Can Do
010-317	Turn off the printer and wait for 40 minutes. Open the rear door and make sure that the fusing unit is fully installed, and turn on the printer.
010-397	Turn off the printer. Confirm that the fusing unit is correctly installed, and turn on the printer.
016-404	Contact your system administrator.
016-405	
016-500	Turn off the printer, and turn it on again.
016-501	
016-502	
016-520	Contact your system administrator.
016-521	
016-522	
016-523	
016-524	
016-527	
016-737	Turn off the printer, and turn it on again.
016-741	
016-744	
016-750	Press the (OK) button, or wait for the time set in `Fault Time-out` for the printer to recover.
016-753	
016-755	
016-757	
016-758	
016-759	
016-799	Press the (OK) button, or wait for the time set in `Fault Time-out` for the printer to recover.
016-930	The device is not supported. Remove it from the USB port.
016-931	The USB hub is not supported. Remove it from the USB port.
027-446	Change IP address to avoid duplication. Turn off the printer, and turn it on again.
027-452	
042-700	Wait for a while until the printer cools down.
077-300	Close the front cover.
093-922	Remove and shake the toner cartridge.
093-925	Turn off the printer. Confirm the toner cartridge is correctly installed, and turn on the printer.
093-926	Open the front cover. Remove the unsupported toner cartridge, and install a supported cartridge.
093-973	Open the front cover, and make sure that the toner cartridge is fully installed.
116-316	Turn off the printer. Remove the optional 512MB memory from the slot, and then reattach it firmly. Turn on the printer. Contact customer support if this failure is repeated.

116-317	Turn off the printer, and turn it on again.
116-320	Remove the unsupported optional memory module.

Contacting Service

When you call for printer service, be prepared to describe the problem you are experiencing or the error message on the LCD panel.

You need to know the model type and service tag of your printer. See the label located on the rear of your printer.

Getting Help

This section includes:

- "LCD Panel Messages" on page 181
- "SimpleMonitor Alerts" on page 181
- "Obtaining the Product Information" on page 181

Fuji Xerox provides several automatic diagnostic tools to help you produce and maintain print quality.

■ LCD Panel Messages

The LCD panel provides you with information and troubleshooting help. When an error or warning condition occurs, the LCD panel displays a message informing you of the problem.

See also:

- "Understanding Printer Messages" on page 178

■ SimpleMonitor Alerts

The SimpleMonitor automatically checks the printer status when you send a print job. If the printer is unable to print your job, the SimpleMonitor automatically displays an alert on your computer screen to let you know that the printer needs attention.

■ Obtaining the Product Information

Obtaining the Latest Print Driver

The latest print driver can be obtained by downloading it from our web site.

The following procedure uses the PCL 6 driver as an example.

NOTE:

- The communication fee shall be borne by users.

1. In your print driver's **Printing Preferences** dialog box, click the **Advanced** tab and then click **About**.
2. Click **Fuji Xerox Web Site**.

   Your web browser launches and our web site is displayed.
3. Follow the instructions on the web site and download an appropriate print driver.

NOTE:

- You can browse our web site also on the *Software/Product Manual* disc included with the printer. To access the web site, click **Fuji Xerox Web Site** on the installation startup window of the CD-ROM.
- The URL of the driver download service page is as follows: http://www.fujixeroxprinters.com/
- For the latest information about the print driver features, refer to the Help provided for the print driver.

Updating the Printer's Firmware

Our web site also provides a tool that allows you to update the printer's firmware (software embedded within the printer) from your computer.

The latest firmware and updating tool can be downloaded from the following URL.

Follow the instructions on the web site and download the correct firmware update.

http://www.fujixeroxprinters.com/

NOTE:

- The communication fee shall be borne by users.

Non-Genuine Mode

When toner within a toner cartridge is empty, the `Replace Toner Cartridge` message appears.

When you want to use the printer in Non-Genuine mode, program the mode and replace the toner cartridge.

IMPORTANT:

- If you use the printer in the Non-Genuine mode, the performance of the printer may not be at its optimum. And any problems that may arise from the use of the Non-Genuine mode are not covered by our quality guarantee. The continuous use of the Non-Genuine mode can also cause the printer to break down, and any repair charges for such break down will be incurred by users.

NOTE:

- Before starting the operation described below, confirm that `Ready` is displayed on the LCD panel.

1. Press the (**Menu**) button.
2. Select `Admin Menu`, and then press the OK button.
3. Select `Maintenance Mode`, and then press the OK button.
4. Select `Non-Genuine`, and then press the OK button.
5. Select `Toner`, and then press the OK button.
6. Select `On`, and then press the OK button.
   The printer switches to the Non-Genuine mode.

8

Maintenance

This chapter includes:

- "Cleaning the Printer" on page 184
- "Replacing Consumables" on page 187
- "Ordering Supplies" on page 198
- "Storing Print Media" on page 199
- "Storing Consumables" on page 200
- "Managing the Printer" on page 201
- "Conserving Supplies" on page 202
- "Checking Page Counts" on page 203
- "Moving the Printer" on page 204
- "Removing Options" on page 205

Cleaning the Printer

This section describes how to clean the printer in order to maintain it in good condition and print clean printouts all the time.

WARNING:

- **When cleaning this product, use the designated cleaning materials exclusive to it. Other cleaning materials may result in poor performance of the product. Never use aerosol cleaners to avoid catching fire and explosion.**

CAUTION:

- **When cleaning this product, always switch off and unplug it. Access to a live machine interior may cause electric shock.**

This section includes:

- "Cleaning Inside the Printer" on page 184

■ Cleaning Inside the Printer

Clean the feed roller inside the printer if print media does not feed correctly.

1 Turn off the printer and disconnect the power cord.

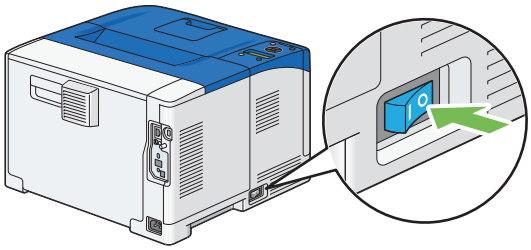

IMPORTANT:

- Note that the data in the memory are cleared when the printer is turned off.

2 Gently pull open the bypass tray cover.

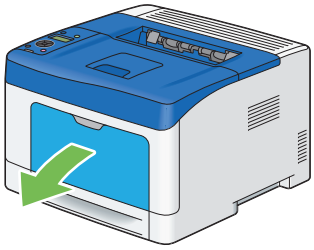

3 Grasp both sides of the bypass tray, and then pull the bypass tray from the printer.

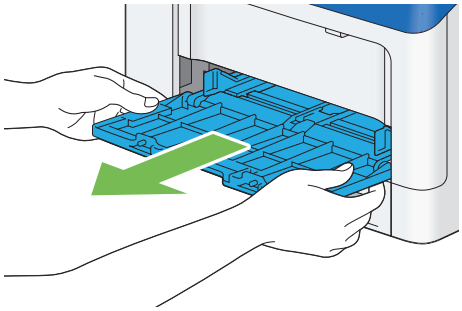

4 Pull the tray out of the printer about 200 mm.

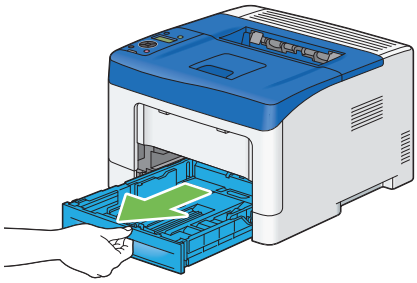

5 Hold the tray with both hands, and remove it from the printer.

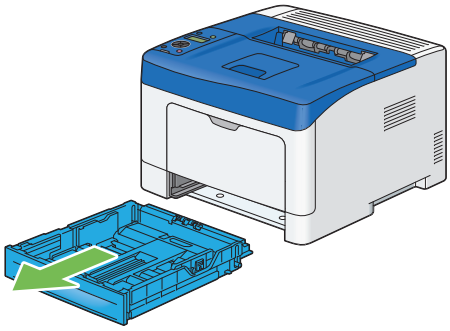

6 Wipe the feed roller inside the printer with a cloth moistened with water.

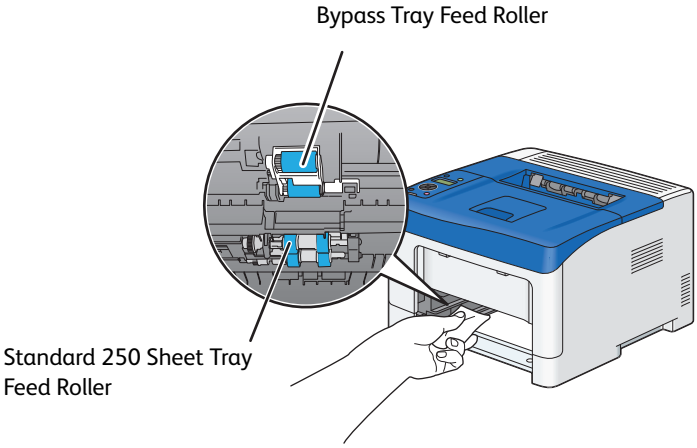

7 Insert the standard 250 sheet tray into the printer, and push until it stops.

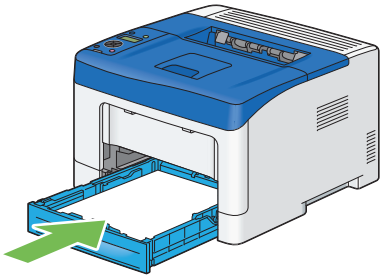

IMPORTANT:

- Do not use excessive force on the tray. Doing so could damage the tray or the inside of the printer.

8 Insert the bypass tray into the printer, push until it stops, and close the cover.

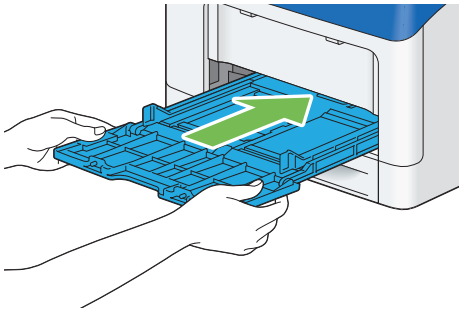

Replacing Consumables

This section describes how to replace consumables.

The following consumables are supplied as the replaceable items.

- Toner cartridge
- Drum cartridge
- Fusing unit
- Transfer unit
- Retard roll

WARNING:

- **Use a broom or a wet cloth to wipe off spilled toner. Never use a vacuum cleaner for the spills.**
  It may catch fire by electric sparks inside the vacuum cleaner and cause explosion. If you spill a large volume of toner, contact your local Fuji Xerox representative.
- **Never throw a toner cartridge into an open flame. Remaining toner in the cartridge may catch fire and cause burn injuries or explosion.**
  If you have a used toner cartridge no longer needed, contact your local Fuji Xerox representative for its disposal.

CAUTION:

- **Keep a drum cartridge and a toner cartridge out of the reach of children. If a child accidentally swallows toner, spit it out, rinse mouth with water, drink water and consult a physician immediately.**
- **When replacing a drum cartridge and a toner cartridge, be careful not to spill the toner. In case of any toner spills, avoid contact with clothes, skin, eyes and mouth as well as inhalation.**
- **If toner spills onto your skin or clothing, wash it off with soap and water.**
  If you get toner particles in your eyes, wash it out with plenty of water for at least 15 minutes until irritation is gone. Consult a physician if necessary.
  If you inhale toner particles, move to a fresh air location and rinse your mouth with water.
  If you swallow toner, spit it out, rinse your mouth with water, drink plenty of water and consult a physician immediately.

■ Replacing the Toner Cartridge

Fuji Xerox toner cartridge is available only through Fuji Xerox.

It is recommended that you use Fuji Xerox toner cartridge for your printer. Fuji Xerox does not provide warranty coverage for problems caused by using accessories, parts, or components not supplied by Fuji Xerox.

This section includes:

- "Overview" on page 187
- "Removing the Toner Cartridge" on page 188
- "Installing a Toner Cartridge" on page 188

Overview

When a toner cartridge reaches its usable life-span, the following messages appear on the LCD panel.

Message	Remaining Page Yield	Printer Status and Action
`Toner Low` `Replace Soon`*1	1,000 pages*2	The toner has become low. Prepare a new toner cartridge.
`Replace` `Toner Cartridge`	-	The toner cartridge has become empty. Replace the old toner cartridge with a new one.

*1:This warning appears only when Fuji Xerox toner cartridge is used (`Non-Genuine` mode is set to off).

*2:When a high capacity toner cartridge is set, the remaining page yield is approx. 2,500 pages. The remaining page yield differs depending on printing conditions, contents of the documents, and frequency of turning on/off the printer. For more information, see IMPORTANT of "Consumables" on page 198.

IMPORTANT:

- When placing a used toner cartridge on the floor or on a table, place a few sheets of paper under the toner cartridge to catch any toner that may spill.
- Do not reuse old toner cartridge once you remove it from the printer. Doing so can impair print quality.
- Do not shake or pound the used toner cartridge. The remaining toner may spill.
- We recommend you to use up the toner cartridge within one year after removing it from the packaging.

Removing the Toner Cartridge

1 Put your fingers in the hole on the front cover, and then pull it down to open.

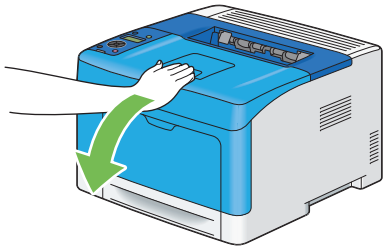

2 Grasp the toner cartridge lock lever, and then raise it upward to unlock.

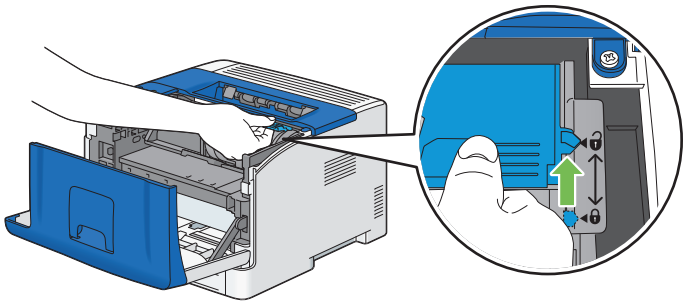

3 Grasp the handle on the toner cartridge, and then pull it out.

IMPORTANT:

- Do not shake the toner cartridge as it may cause toner spills.

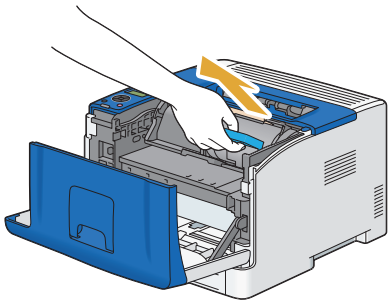

Installing a Toner Cartridge

1 Unpack a new toner cartridge.

NOTE:

- Handle the toner cartridge carefully to avoid spilling of the toner.

2 Shake the new toner cartridge five or six times to distribute the toner evenly.

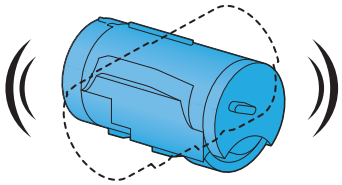

3 Make sure that the two tabs of the toner cartridge align with the grooves on the printer, and then insert it into the printer until it clicks.

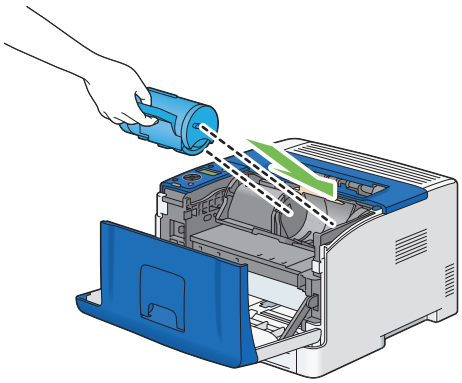

4 Grasp the toner cartridge lock lever, and then pull it down until it stops.

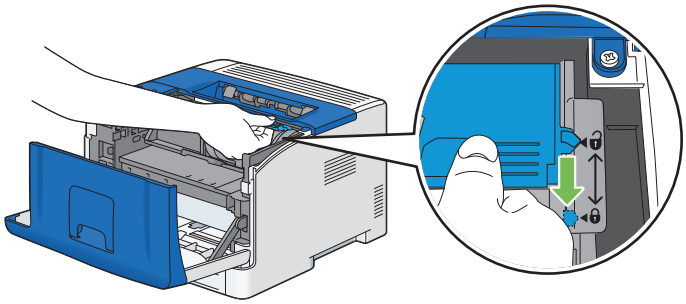

5 Close the front cover.

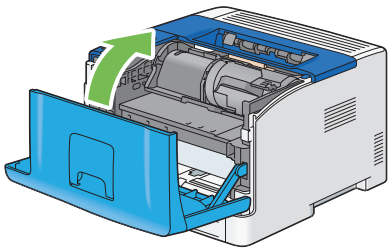

■ Replacing the Drum Cartridge

This section describes how to replace the drum cartridge.

IMPORTANT:

- Protect the drum of the drum cartridge against bright light. If the rear door remains open for more than 3 minutes, print quality may deteriorate.

This section includes:

- "Removing the Drum Cartridge" on page 190
- "Installing a Drum Cartridge" on page 191

Overview

When a drum cartridge reaches its usable life-span, the following messages appear on the LCD panel.

Message	Remaining Page Yield	Printer Status and Action
`K Drum Cartridge Replace Soon`	10,000 pages	The drum cartridge is near the end of its life. Prepare a new one.
`Replace Black Drum Cartridge`	-	The drum cartridge has reached the end of its life. Replace the old drum cartridge with a new one.

Removing the Drum Cartridge

1 Put your fingers in the hole on the front cover, and then pull it down to open.

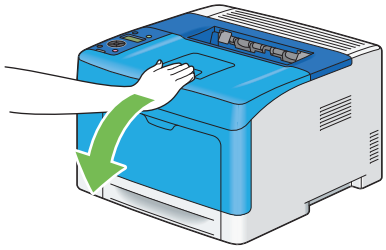

2 Grasp the toner cartridge lock lever, and then raise it upward to unlock.

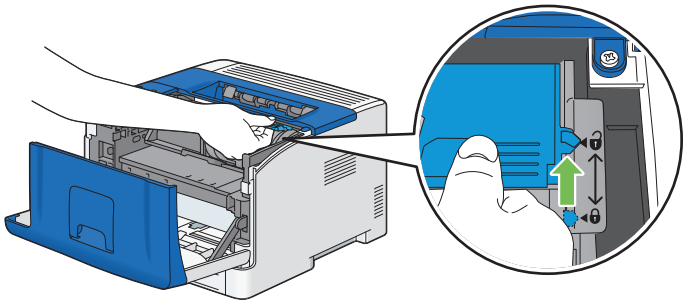

3 Grasp the handle on the toner cartridge, and then pull it out.

IMPORTANT:

- Do not shake the toner cartridge as it may cause toner spills.
- Keep the removed toner cartridge on a level surface.

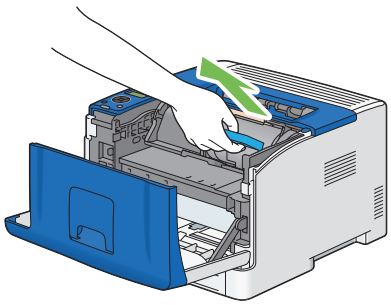

4 Grasp the handle on the front of the drum cartridge, and then pull it out halfway with one hand.

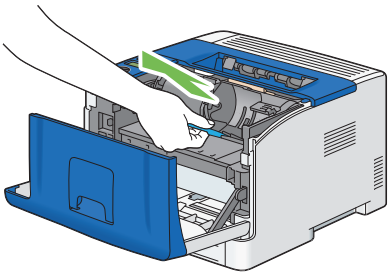

5 Grasp the handle on the top of the drum cartridge with the other hand, and then pull it out completely.

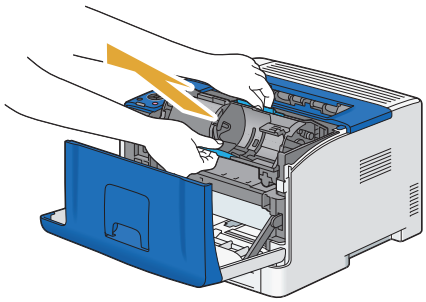

Installing a Drum Cartridge

1 Unpack a new drum cartridge.

2 Insert the drum cartridge into the cartridge slot, and then push until it stops.

NOTE:

- The protective cover of the drum comes off while inserting the drum cartridge into the cartridge slot. You do not need to remove it in advance.

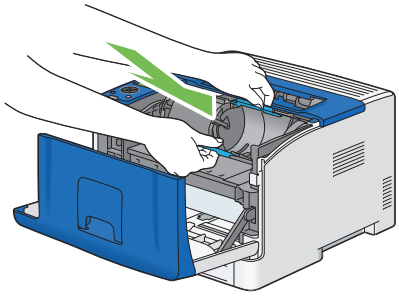

3 Make sure that the two tabs of the toner cartridge align with the grooves on the printer, and then insert it into the printer until it clicks.

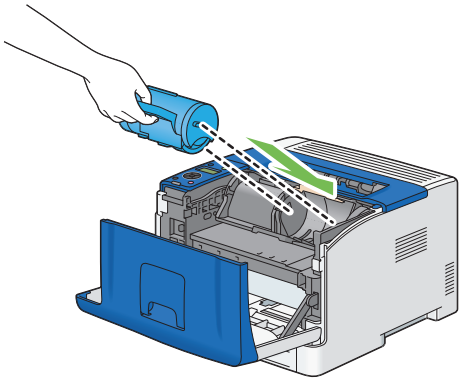

4 Grasp the toner cartridge lock lever, and then pull it down until it stops.

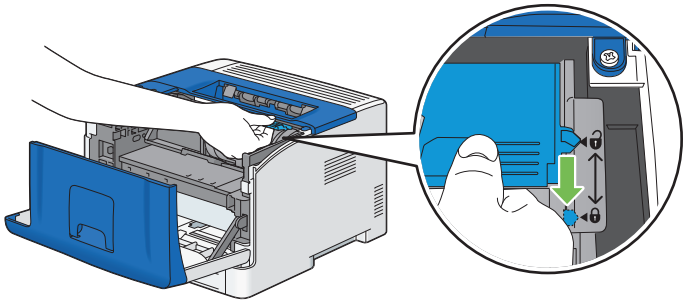

5 Close the front cover.

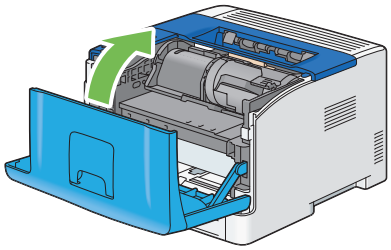

■ Replacing the Fusing Unit, Transfer Unit and Retard Roll

You need to replace three parts (fusing unit, transfer unit and retard roll) at a time. Both the transfer unit and the retard roll for replacement come with a new fusing unit.

Fuji Xerox fusing unit, transfer unit, and retard roll are available only through Fuji Xerox. To order by phone, see also "Online Services" on page 215.

It is recommended that you use Fuji Xerox fusing unit, transfer unit, and retard roll for your printer. Fuji Xerox does not provide warranty coverage for problems caused by using accessories, parts, or components not supplied by Fuji Xerox.

CAUTION:

- **Fusing Unit Safety**
  When removing the Fusing Unit, always switch off first and wait for 40 minutes until it cools off.

This section includes:

- "Removing the Fusing Unit" on page 192
- "Installing a Fusing Unit" on page 193
- "Removing the Transfer Unit" on page 194
- "Installing a Transfer Unit" on page 194
- "Removing the Retard Roll in the Standard 250 Sheet Tray" on page 195
- "Installing a Retard Roll in the Standard 250 Sheet Tray" on page 196
- "Resetting the Counter of the Fusing Unit" on page 197

Overview

When a fusing unit or transfer unit reaches its usable life-span, the following messages appear on the LCD panel.

Message	Remaining Page Yield	Printer Status and Action
`Fusing Unit Life Replace Soon`	10,000 pages	The fusing unit is near the end of its life. Prepare a new one. Replace the fusing unit as well as the transfer unit at the same time.
`Fusing Unit Life Replace`	-	The fusing unit has reached the end of its life. Replace the old fusing unit with a new one.
`Replace Transfer Unit`	-	The transfer unit has reached the end of its life. Replace the old transfer unit with a new one.

Removing the Fusing Unit

1 Turn off the printer, and wait for 40 minutes.

IMPORTANT:

- Note that the data in the memory are cleared when the printer is turned off.

2 Pull the rear door handle on the rear of the printer to open the rear door.

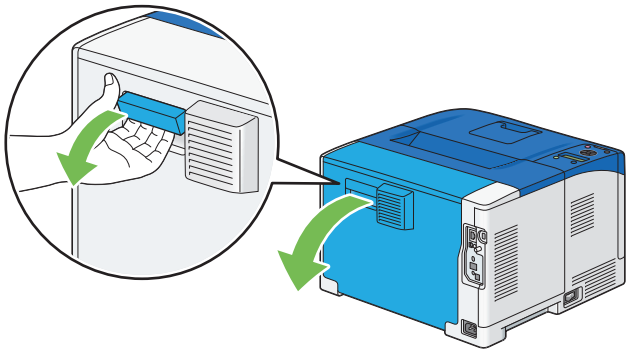

3 Raise the two gray levers on the both sides of the fusing unit to unlock.

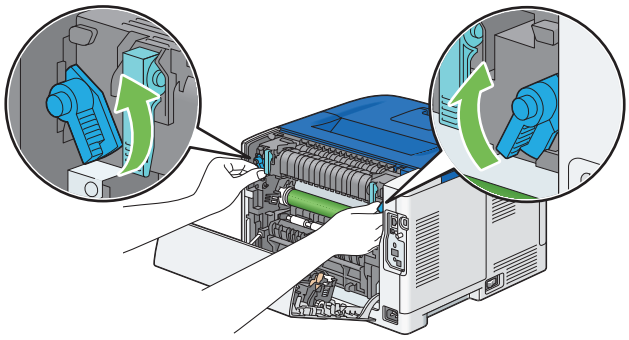

4 Grasp the grips on both sides of the fusing unit placing thumb on the knurling, and then pull out the unit.

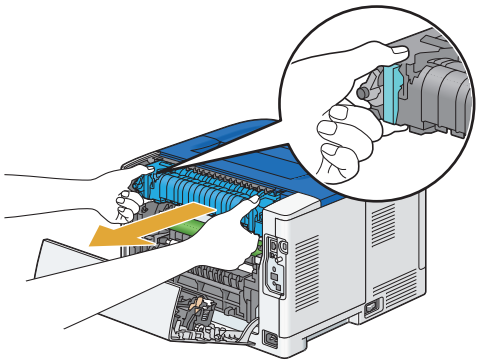

Installing a Fusing Unit

1 Unpack a new fusing unit.

2 Remove the packing material from the fusing unit.

3 Insert the fusing unit into the printer until it clicks.

NOTE:

- Hold both sides of the fusing unit with your hands.
- Make sure that the fusing unit is firmly set in the slots and cannot be moved easily.

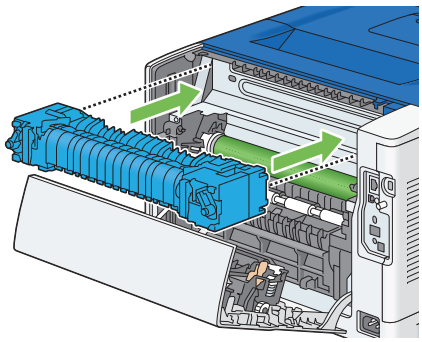

4 Lower the two gray levers to lock the fusing unit.

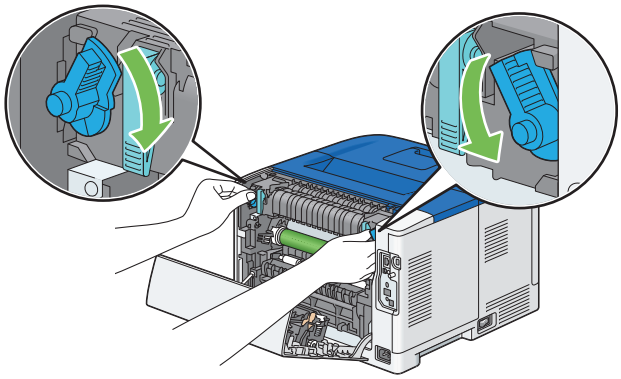

NOTE:

- After replacing the fusing unit, initialize its life counter. For details, see "Resetting the Counter of the Fusing Unit" on page 197.

Removing the Transfer Unit

1 Push the tabs on both sides of the transfer unit inward, and then lift it out of the printer.

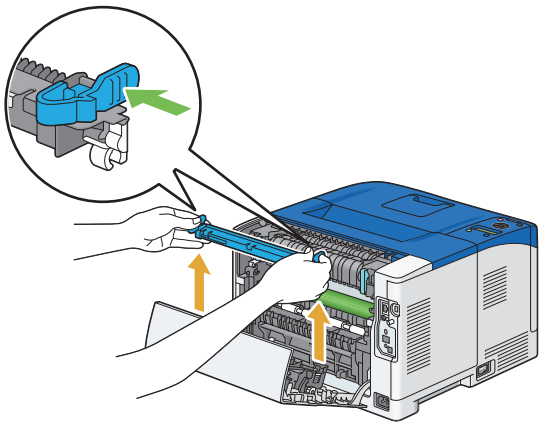

Installing a Transfer Unit

1 Unpack a new transfer unit.

2 Hold the transfer unit by its both ends.

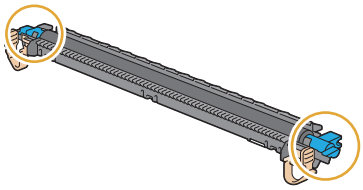

3 Push the both ends of the transfer unit inward, put it on the duplexer, and then rotate the transfer unit forward.

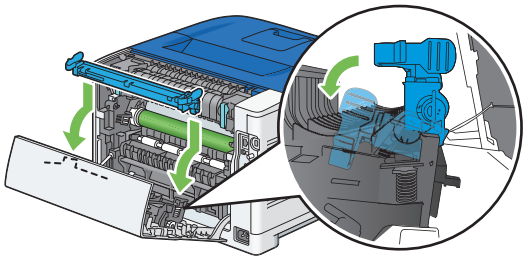

4 Make sure that the arrow marks on the transfer unit and the printer face each other, and then press the two tabs on transfer unit inward to lock.

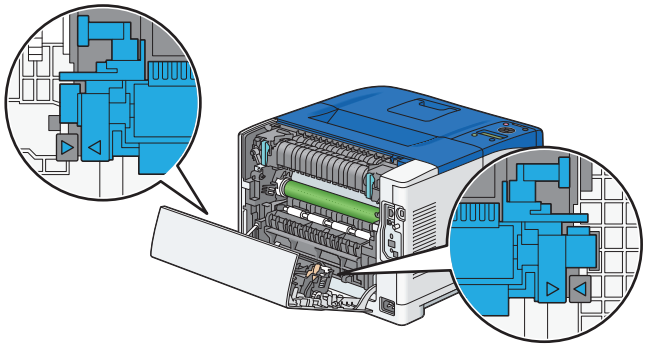

5 Close the rear door.

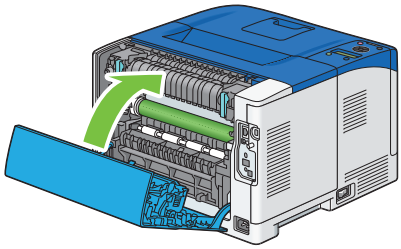

Removing the Retard Roll in the Standard 250 Sheet Tray

1 Hold the standard 250 sheet tray with both hands, and remove it from the printer.

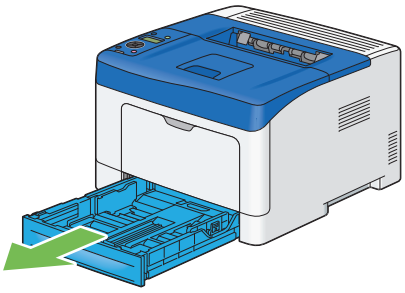

NOTE:

- Ensure that you remove all the paper from the standard 250 sheet tray before removing the retard roll.

2 Slightly pressing down the lock lever on the standard 250 sheet tray to the right with one hand, raise the retard roll with the other hand.

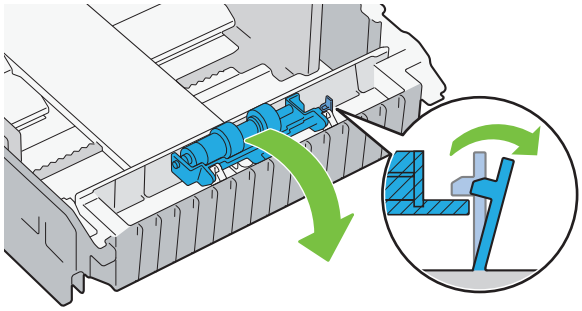

3 Slide the retard roll to the left to remove it from the standard 250 sheet tray.

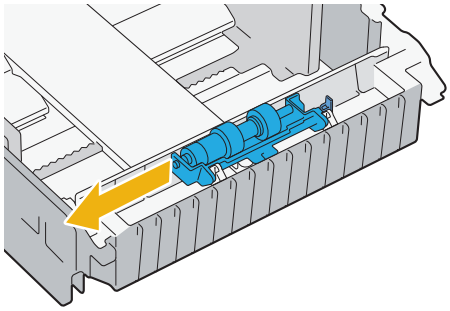

Installing a Retard Roll in the Standard 250 Sheet Tray

1 Unpack a new retard roll.

2 Slide the two axles of the retard roll into the holes on the standard 250 sheet tray.

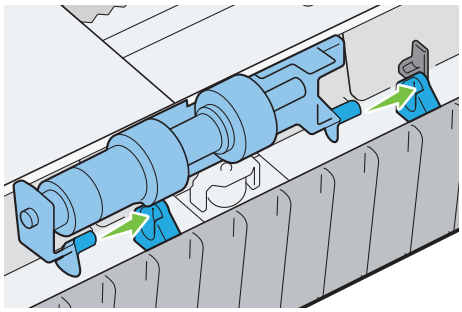

3 Press down the retard roll until it snaps.

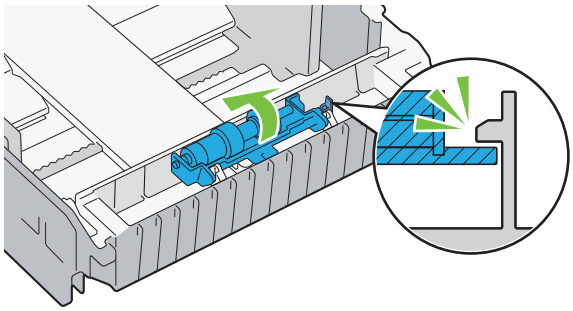

4 Load paper in the standard 250 sheet tray, and then insert the standard 250 sheet tray into the printer and push until it stops.

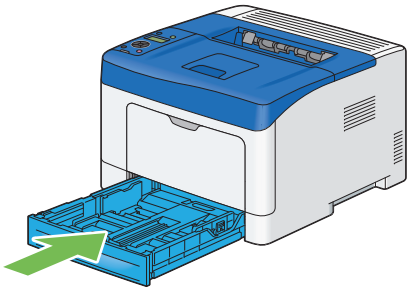

IMPORTANT:

- Do not use excessive force on the tray. Doing so could damage the tray or the inside of the printer.

Resetting the Counter of the Fusing Unit

After replacing the fusing unit, use the operator panel to reset the counter of the fusing unit.

1 Press the (**Menu**) button.

2 Select `Admin Menu`, and then press the OK button.

3 Select `Maintenance Mode`, and then press the OK button.

4 Select `Reset FusingUnit`, and then press the OK button.

5 Ensure that `Are You Sure?` appears, and then press the OK button.

Ordering Supplies

This section includes:

- "Consumables" on page 198
- "When to Order Supplies" on page 198
- "Recycling Supplies" on page 198

Certain consumables and routine maintenance items need to be ordered occasionally. Each supply includes installation instructions on the box.

■ Consumables

IMPORTANT:

- Use of consumables/periodical replacement parts not recommended by Fuji Xerox can impair machine quality and performance. Use only consumables/periodical replacement parts recommended by Fuji Xerox.

Product Name	Product Code	Printable number of pages
Toner Cartridge 355/365 (Standard Capacity)	CT201937	4,000 pages
Toner Cartridge 355/365 (High Capacity)	CT201938	10,000 pages
Drum Cartridge 355/365/368	CT350973	100,000 pages
Maintenance KIT L38 110V	EL300925	100,000 pages
Maintenance KIT L38 220V	EL300926	100,000 pages

IMPORTANT:

- Average standard pages. These values are estimates and vary depending on conditions such as the content being printed, paper size, paper type, pages per job (job size), simplex/duplex printing, the printer's operating environment, initializing process done when you turn on or off the printer, and adjustments to maintain print quality. Toner Cartridge declared yield in accordance with ISO/IEC 19752.

■ When to Order Supplies

The LCD panel displays a warning when the supply nears its replacement time. Verify that you have replacements on hand. It is important to order these supplies when the messages first appear to avoid interruptions to your printing. The LCD panel displays an error message when the supply must be replaced.

For details on error messages about replacing the toner cartridge, drum cartridge, fusing unit, or transfer unit, see "Replacing Consumables" on page 187.

To order supplies, contact the Fuji Xerox local representative office or an authorized dealer.

IMPORTANT:

- This printer is designed to provide the most stable performance and print quality when used with the recommended consumables. Not using consumables recommended for this machine degrades the performance and printing quality of the printer. You could also incur charges if the machine breaks down. To receive customer support and achieve the optimum performance of the printer, be sure to use recommended consumables.

■ Recycling Supplies

- For environmental protection and efficient use of resources, Fuji Xerox reuses returned toner cartridges and drums (photoreceptors) to make recycle parts, recycle materials or energy recovery.
- Proper disposal is required for toner cartridges and drums (photoreceptors) no longer needed. Do not open toner cartridges and drums (photoreceptors). Return them to your local Fuji Xerox representative.

Storing Print Media

To avoid potential paper feeding problems and uneven print quality, there are several things you can do:

- To achieve the best possible print quality, store print media in an environment where the temperature is approximately 70 °F/21 °C and the relative humidity is 40 %.
- Store cartons of print media on a pallet or shelf, rather than directly on the floor.
- If you store individual packages of print media out of the original carton, ensure that they rest on a flat surface so the edges do not buckle or curl.
- Do not place anything on top of the print media packages.

Storing Consumables

Store consumables in their original packaging until you need to use them. Do not store consumables in:

- Temperatures greater than 104 °F/40 °C.
- An environment with extreme changes in humidity or temperature.
- Direct sunlight.
- Dusty places.
- A car for a long period of time.
- An environment where corrosive gases are present.
- A humid environment.

Managing the Printer

This section includes:

- "Checking or Managing the Printer with CentreWare Internet Services" on page 201
- "Checking Printer Status with SimpleMonitor (Windows® Only)" on page 201

■ Checking or Managing the Printer with CentreWare Internet Services

When the printer is installed in a TCP/IP environment, you can use CentreWare Internet Services to check the printer status, the remaining volume of consumables, and the paper loaded in this printer. You can also use CentreWare Internet Services to configure printer settings.

NOTE:

- When using the printer as a local printer, you cannot use CentreWare Internet Services. For details about checking the status of a local printer, refer to "Checking Printer Status with SimpleMonitor (Windows® Only)" on page 201.

Starting CentreWare Internet Services

Use the following procedure to start CentreWare Internet Services.

1. Launch your web browser.
2. Enter the IP address in the browser's address field, and then press the **Enter** key.

   The CentreWare Internet Services screen appears.

• Using Online Help

For details regarding the items that can be set in each CentreWare Internet Services screen, click the **Help** button to display the online Help.

■ Checking Printer Status with SimpleMonitor (Windows® Only)

SimpleMonitor is a tool that is installed with your Fuji Xerox print driver. It automatically checks the printer status when you send a print job. SimpleMonitor can also check the status of the tray and remaining amount of consumables, such as the toner cartridge.

Starting SimpleMonitor

Double-click the SimpleMonitor icon on the taskbar or right-click the icon and select **Select Printer**.

If the SimpleMonitor icon is not displayed on the taskbar, open SimpleMonitor from the **Start** menu:

The following procedure uses Windows® 7 and Windows® 10 as examples.

1. Click **Start** → **All Programs** → **Fuji Xerox** → **SimpleMonitor for Asia-Pacific** → **Activate SimpleMonitor** (for Windows® 7).
   Click **Start** → **All apps** → **Fuji Xerox** → **SimpleMonitor for Asia-Pacific** → **Activate SimpleMonitor** (for Windows® 10).

   The **Select Printer** window appears.
2. Click the name of the desired printer from the list.
3. The Status Monitor window appears.

For details about the functions of SimpleMonitor, refer to the online Help.

Conserving Supplies

You can change several settings in your print driver to conserve toner cartridge and paper.

The following descriptions use the Windows® PCL 6 driver as an example.

Supply	Setting	Function
Toner cartridge	**Toner Saver** in the **Image Options** tab	This check box allows the users to select a print mode that uses less toner. The image quality will be lower when this feature is used.
Print media	**Pages Per Sheet (N-Up)** in the **Layout/Watermark** tab	The printer prints two or more pages on one side of a sheet. Values for **Pages Per Sheet (N-Up)** are **1-Up**, **2-Up**, **4-Up**, **8-Up**, **16-Up**, **32-Up**. Combined with the duplex setting, **Pages Per Sheet (N-Up)** allows you to print up to 64 pages on one sheet of paper. (32 images on the front and 32 on the back)

Checking Page Counts

The total number of printed pages can be checked at the operator panel. Four meters are available: `Meter 1`, `Meter 2`, `Meter 3`, and `Meter 4`.

The `Meter Readings` counts the number of pages printed properly. Single side print (including Pages Per Sheet (N-Up)) is counted as one job, and 2-sided print (including Pages Per Sheet (N-Up)) is counted as two. During 2-sided printing, if an error occurs after one side is printed properly, it is counted as one.

When doing 2-sided printing, a blank page may be inserted automatically depending on the settings of the application. In this case, the blank page is counted as one page.

For information about the individual meter, see "Meter Readings" on page 107.

Use the following procedure to check a meter:

1. Press the (**Menu**) button.
2. Select `Meter Readings`, and then press the OK button.
3. Select the desired meter to check the number of pages.

Moving the Printer

This section describes how to move the printer.

IMPORTANT:

- To prevent you from dropping the printer and getting backache or injuries, lift the printer by firmly gripping the recessed areas on both sides of the printer. Never lift the printer by gripping any other areas.

NOTE:

- If the optional 550 sheet feeder has been installed, uninstall the optional 550 sheet feeder before moving the printer. If the optional 550 sheet feeder is not fixed securely to the printer, it may fall to the ground and cause injuries. For details on how to uninstall the optional 550 sheet feeder, see "Removing the Optional 550 Sheet Feeder" on page 207.

1. Turn off the printer and disconnect the power cord, interface cable, and any other cables.

   IMPORTANT:

   - Note that the data in the memory are cleared when the printer is turned off.

2. Remove any paper in the output tray and slide the output tray extension inside the printer.

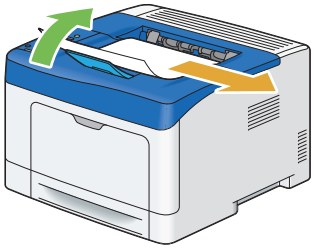

3. Lift the printer and move it gently.

   NOTE:

   - If you move the printer over a long distance, remove the toner cartridge from the printer to prevent toner from spilling, and pack the printer inside a box.

Removing Options

If the printer location needs to be changed or the printer and print media handling options need to be shipped to a new location, all print media handling options must be removed from the printer. For shipping, pack the printer and print media handling options securely to avoid damage.

This section includes:

- "Removing the Optional 512MB Memory" on page 205
- "Removing the Optional 550 Sheet Feeder" on page 207
- "Removing the Optional Wireless Printer Adapter" on page 209
- "Removing the Optional Font ROM" on page 211

■ Removing the Optional 512MB Memory

IMPORTANT:

- When you remove the optional 512MB memory, be sure to turn off the printer, unplug the power cord, and disconnect all cables from the rear of the printer before starting these tasks.

1 Turn off the printer.

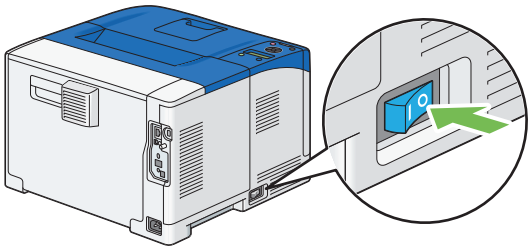

IMPORTANT:

- Note that the data in the memory are cleared when the printer is turned off.

2 Turn the screw on the control board cover counterclockwise.

NOTE:

- Loosen the screw. You do not need to remove the screw.

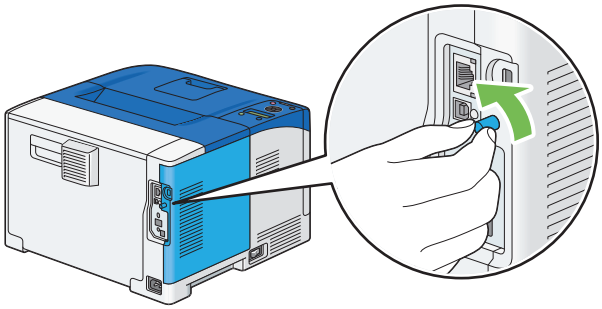

3 Slide the control board cover towards the rear of the printer to remove the cover.

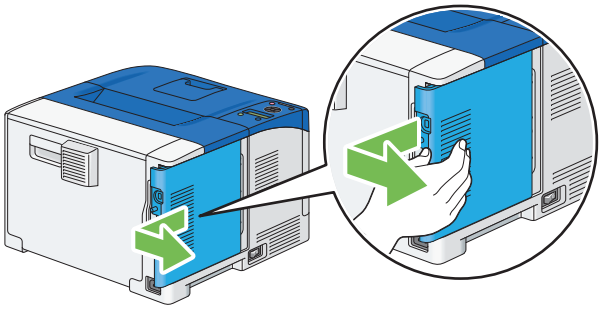

4 Push the clips on both sides of the slot outward to raise the 512MB memory.

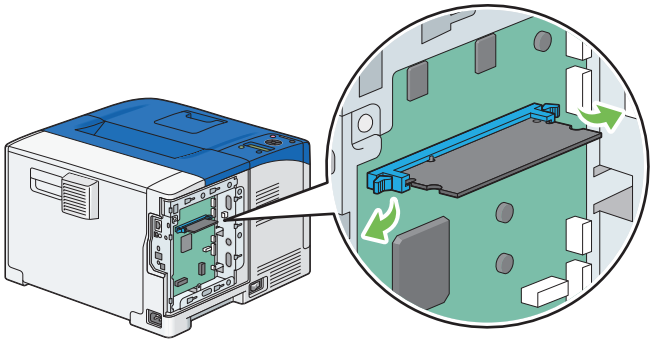

5 Hold the 512MB memory and pull it straight out.

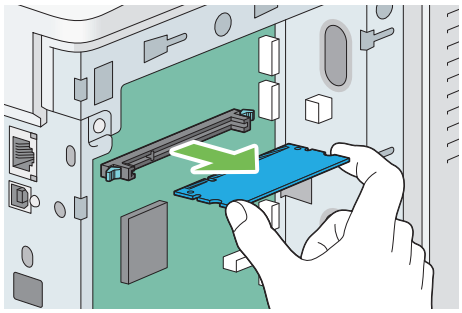

6 Align the guide on the control board cover with the slot around the control board, and slide it towards the front of the printer.

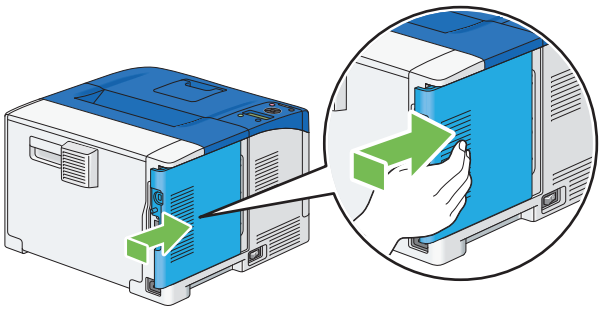

7 Turn the screw clockwise.

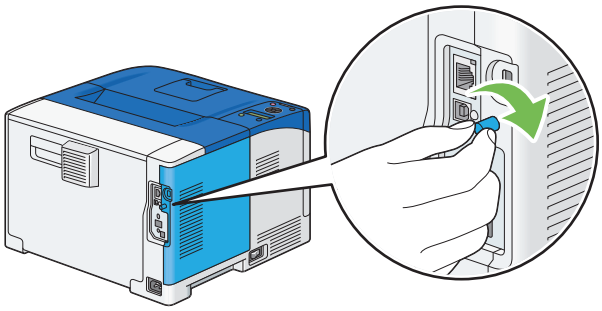

8 Turn on the printer.

Removing the Optional 550 Sheet Feeder

IMPORTANT:

- When you remove the optional 550 sheet feeder (Tray2), be sure to turn off the printer, unplug the power cord, and disconnect all cables from the back of the printer before starting these tasks.

1 Turn off the printer.

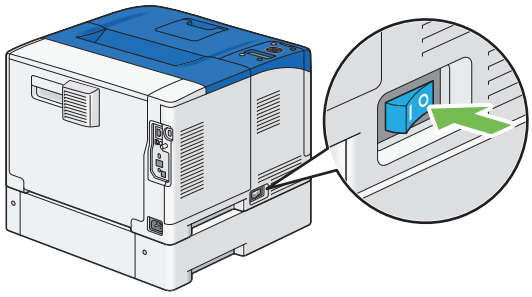

IMPORTANT:

- Note that the data in the memory are cleared when the printer is turned off.

2 Disconnect the power cord from the power connector on the rear of the printer.

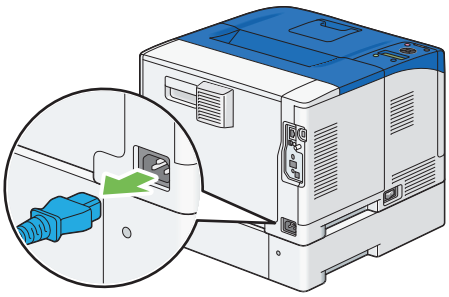

3 Gently pull open the bypass tray cover.

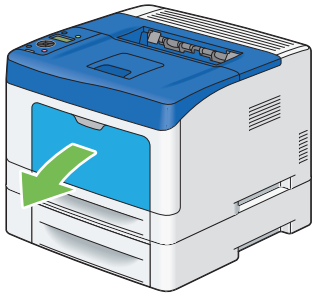

4 Grasp both sides of the bypass tray, and then pull the bypass tray from the printer.

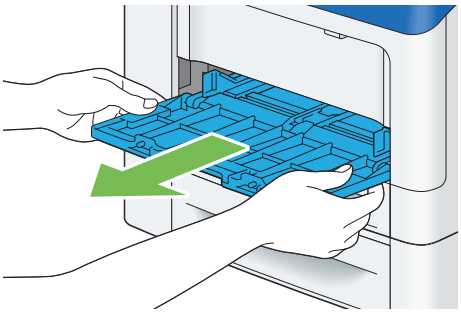

5 Pull the standard 250 sheet tray out of the printer about 200 mm. Hold the standard 250 sheet tray with both hands, and remove it from the printer.

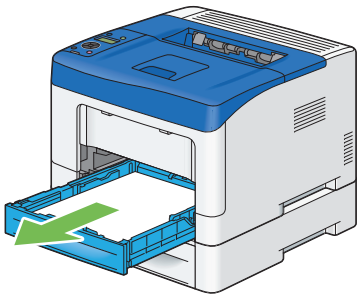

6 Remove the two screws joining the printer and the optional 550 sheet feeder by unscrewing them with a coin or similar object.

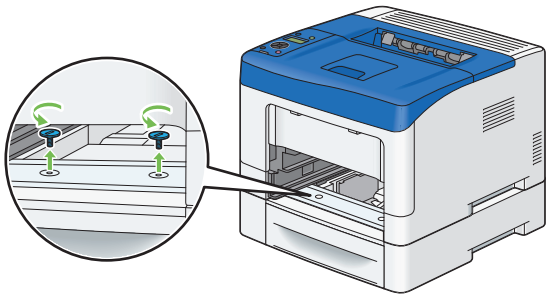

NOTE:

- The screw hole is located in 70 mm recess from the front of the printer.

7 Gently lift the printer off the optional 550 sheet feeder, and place it on a level surface.

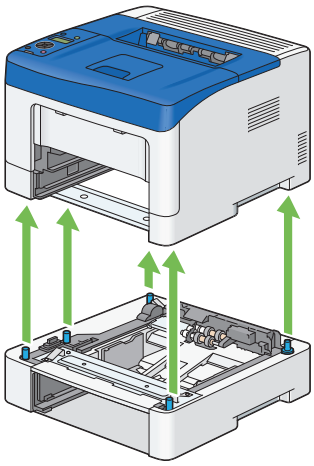

8 Insert the standard 250 sheet tray into the printer, and push until it stops.

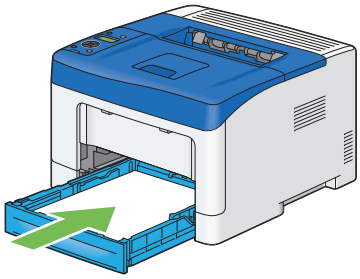

IMPORTANT:

- Do not use excessive force on the tray. Doing so could damage the tray or the inside of the printer.

9 Insert the bypass tray into the printer, push until it stops, and close the cover.

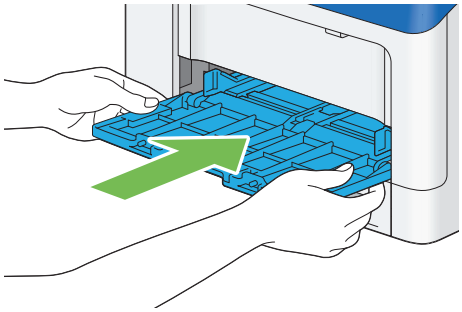

10 Reconnect all cables into the rear of the printer and turn on the printer.

■ Removing the Optional Wireless Printer Adapter

IMPORTANT:

- If you remove the optional wireless printer adapter, be sure to turn off the printer, unplug the power cord, and disconnect all cables from the rear of the printer before removing the adapter.

1 Turn off the printer.

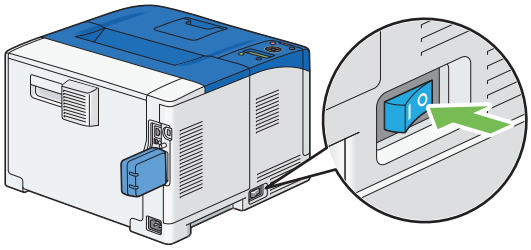

IMPORTANT:

- Note that the data in the memory are cleared when the printer is turned off.

2 Disconnect the power cord from the power connector on the rear of the printer.

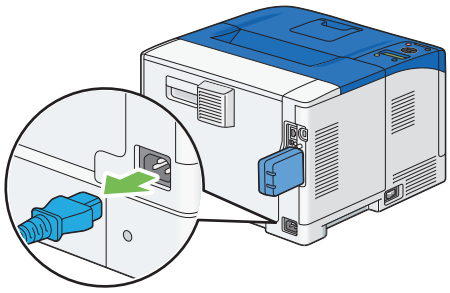

3 Turn the screw on the control board cover counterclockwise.

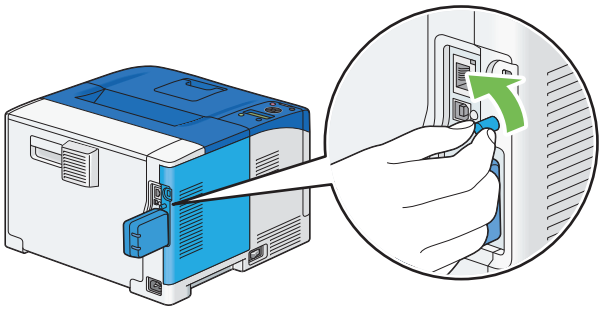

4 Slide the control board cover towards the rear of the printer and remove the cover.

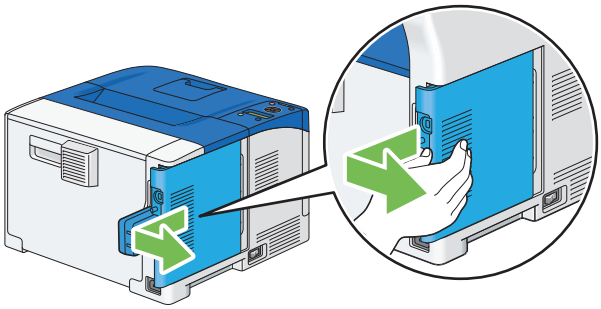

5 Remove the wireless printer adapter from the printer by releasing the adapter's hook while pushing the wireless printer adapter towards the front of the printer.

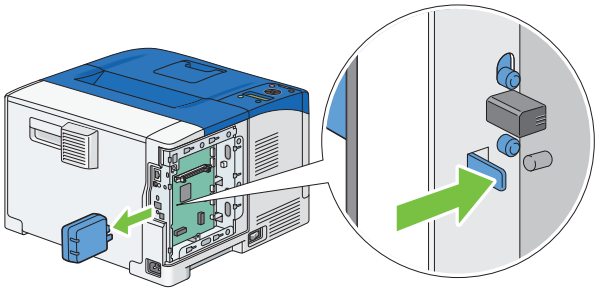

6 Align the guide on the control board cover with the slot around the control board, and slide it towards the front of the printer.

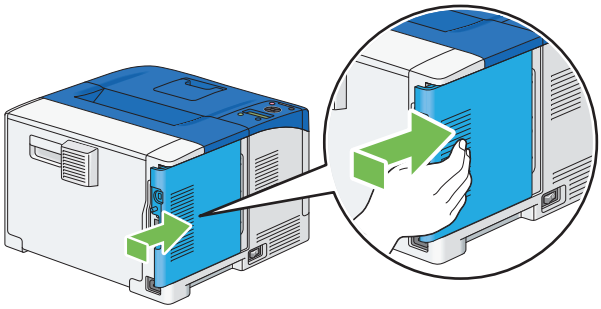

7 Turn the screw clockwise.

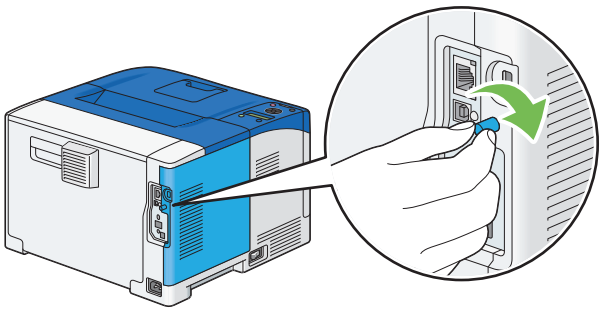

8 Reconnect all cables into the rear of the printer and turn on the printer.

■ Removing the Optional Font ROM

IMPORTANT:

- When you remove the optional Font ROM, be sure to turn off the printer, unplug the power cord, and disconnect all cables from the rear of the printer before starting these tasks.

1 Turn off the printer.

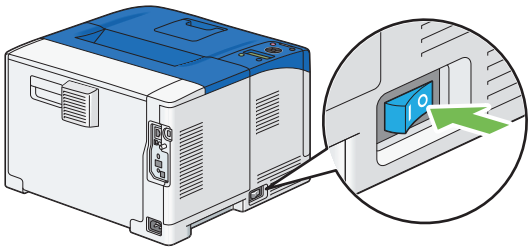

IMPORTANT:

- Note that the data in the memory are cleared when the printer is turned off.

2 Turn the screw on the control board cover counterclockwise.

NOTE:

- Loosen the screw. You do not need to remove the screw.

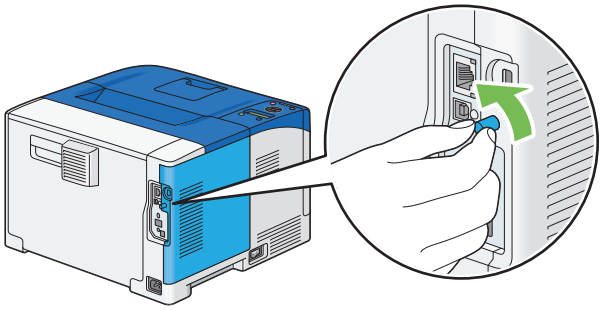

3 Slide the control board cover towards the rear of the printer to remove the cover.

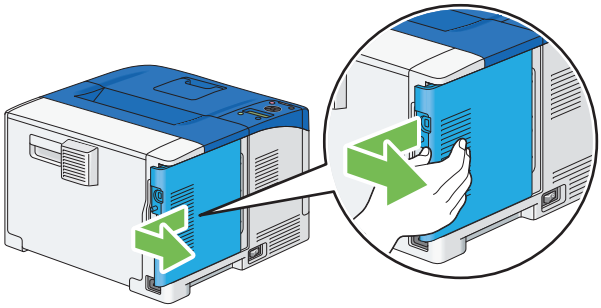

4 Pull the tabs on both sides of the font ROM outward to raise it.

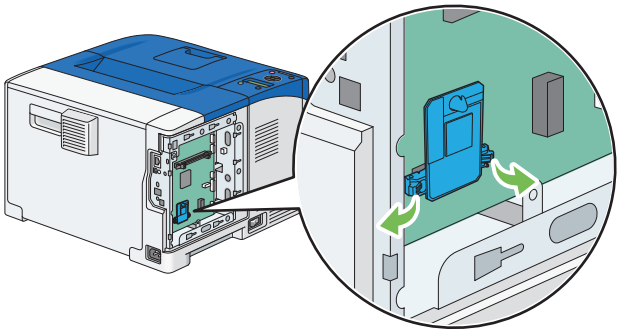

5 Hold the font ROM and pull it straight out.

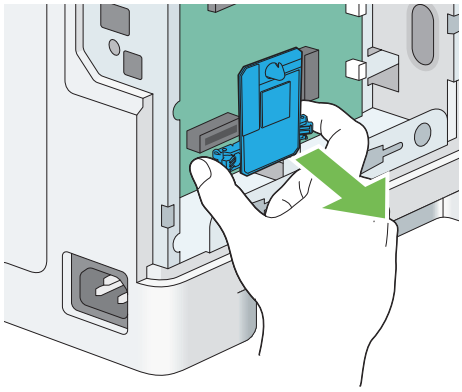

6 Align the guide on the control board cover with the slot around the control board, and slide it towards the front of the printer.

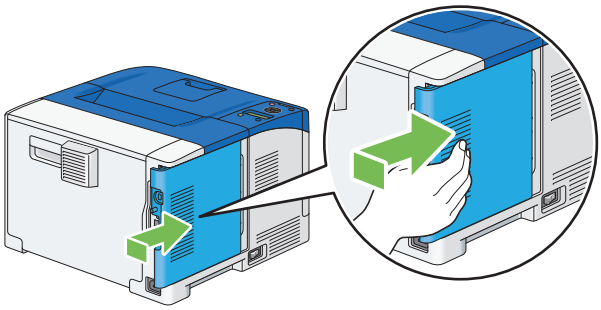

7 Turn the screw clockwise.

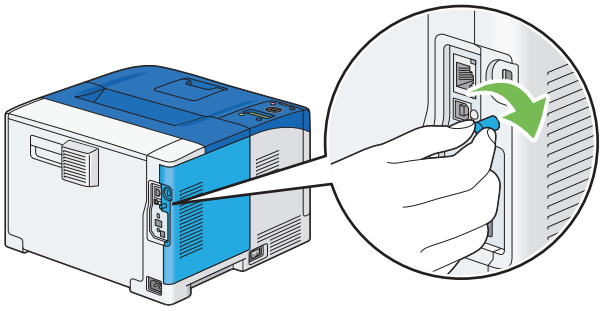

8 Turn on the printer.

9

Contacting Fuji Xerox

This chapter includes:

- "Technical Support" on page 214
- "Online Services" on page 215

Technical Support

Fuji Xerox recommends the Customer first utilize support materials shipped with the product, product diagnostics, information contained on the Web, and email support. If unsuccessful, to obtain service under product warranty the Customer must notify Fuji Xerox Telephone Support or its authorized service representative of the defect before the expiration of the warranty period. Customer will provide appropriate assistance to Telephone Support personnel to resolve issues, such as restoration of the operating system, software program and drivers to their default configuration and settings, verification of functionality of Fuji Xerox supplied products, replacement of customer replaceable units, clearing paper misfeeds and cleaning the unit and other prescribed routine and preventative maintenance.

If the Customer's product contains features that enable Fuji Xerox or its authorized service representative to diagnose and repair problems with the product remotely, Fuji Xerox may request that the Customer allow such remote access to the product.

Online Services

You can find detail Product and Consumable warranty information on our website at http://www.fujixeroxprinters.com/

Fuji Xerox Online Support Assistant provides instructions and troubleshooting guides to resolve your printer problems. It is an easy-to-use, searchable online help. To find out more, please visit our online support at http://www.fujixeroxprinters.com/

DocuPrint P365 d/DocuPrint P368 d
User Guide
ME7844E2-1 (Edition 1)
August 2016
Fuji Xerox Co., Ltd.
Copyright© 2016 by Fuji Xerox Co., Ltd.